MULTI-DECK MERCHANDISER

INSTALLATION & OPERATIONS MANUAL

PT-SC (R-290)

WARNING / FOR YOUR SAFETY
Do not store or use gasoline or other flammable vapors and liquids in the vicinity of this or any other appliance.

WARNING
R290 flammable refrigerant in use. Improper installation, adjustment, alteration, service or maintenance can cause property damage, injury or death. Read the installation, operating and maintenance instructions thoroughly before installing or servicing this equipment.

Table of Contents

Technical References 2-6
General Information 7
Installation 8-10
Case Connections 11-12
Lighting & Power Supplies 13-14
Pre-Power Checklist 15
Airflow & Defrost 16
Case Cleaning 17-19
Troubleshooting 20
Safety Devices & Service 21-22
Parts Ordering 23
Appendices

To ensure proper functionality and optimum performance, it is STRONGLY recommended that Hillphoenix specialty cases be installed/serviced by qualified technicians who have experience working with commercial refrigerated display merchandisers and storage cabinets. For a list of Hillphoenix-authorized installation/service contractors, please visit our website at www.hillphoenix.com.

Hillphoenix®
A DOVER™ COMPANY

NSF® c UL® us 2017 DOE COMPLIANT

01/22

Important

At Hillphoenix®, the safety of our customers and employees, as well as the ongoing performance of our products, are top priorities. To that end, we include important warning messages in all Hillphoenix installation and operations handbooks, accompanied by an alert symbol paired with the word "DANGER", "WARNING", or "CAUTION".

All warning messages will inform you of the potential hazard; how to reduce the risk of case damage, personal injury or death; and what may happen if the instructions are not properly followed.

This manual must be stored near the display case where it can be easily consulted. If this manual does not provide the information you require please contact Hillphoenix for more information.

⚠ DANGER

Indicates an immediate threat of death or serious injury if all instructions are not followed carefully.

⚠ WARNING

Indicates a potential threat of death or serious injury if all instructions are not followed carefully.

⚠ CAUTION

Indicates that failure to properly follow instructions may result in case damage.

Revision History

- new manual format_01/22

PT-SC

Self-Service Open Multi-Deck Merchandiser w/ Food Prep
4' & 6' (Bakery/Deli/Sushi)

R-290 ECO FRIENDLY

GENERAL NOTES:

- "---" Indicates that the feature is not an option on this case model and/or the data is not yet available at this time.
- Deli pans shown (optional)
- DRS - Dry Rear Storage (optional)

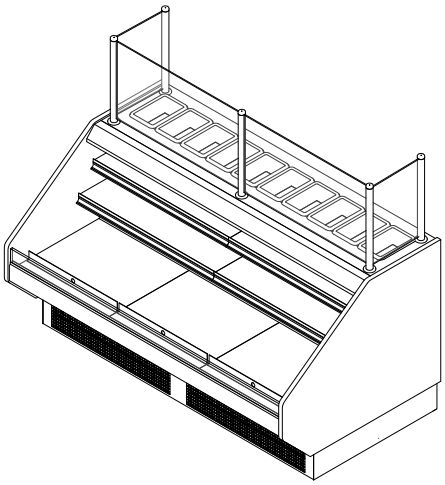

SHIPPING WEIGHT	
Case	Weight
PT-SC	---

2017 DOE COMPLIANT

ALL MEASUREMENTS ARE TAKEN PER ASHRAE-72-2005 SPECIFICATIONS. HILLPHOENIX REFRIGERATED DISPLAY CASES FOR SALE IN THE UNITED STATES MEET OR EXCEED DEPARTMENT OF ENERGY 2017 REQUIREMENTS.

PT-SC

Rev. Date	Rev. #	Rev. Title
10-08-20	1	NEW STANDARDS

SECOND NATURE NATURAL
Clearvoyant LED SYSTEM
Hillphoenix a dover company

PT-SC

Self-Service Open Multi-Deck Merchandiser w/ Food Prep
4' & 6' (Bakery/Deli/Sushi)

R-290 ECO FRIENDLY

SYSTEM REQUIREMENTS				
Case Length	Volts	Phase	Total Amps	Minimum Circuit Ampacity
4'	120	1	7.2	8.7
6'	120	1	12.4	13.7

SYSTEM REQUIREMENTS				
Case Length	Volts	Phase	Total Amps	Minimum Circuit Ampacity
4'	120/208	1	6.1	7.6
6'	120/208	1	6.4	7.7

ELECTRICAL DATA				
			Fan Motor	
Case Length	Fans Per Case	Volts	Total Amps	Total Watts
4'	1	115	0.30	25
6'	2	115	0.60	25

LIGHTING DATA			Clearvoyant 4 LED Lighting			
			Standard Power		High Power	
			24 Volts		24 Volts	
Case Length	Lights Per Row	Light Length	Amps	Watts	Amps	Watts
4'	1	4'	0.05	5.9	0.12	14.9
6'	2	3'	0.04	42.6	0.10	11.9

GUIDELINES AND CONTROL SETTINGS					
Case Length	24hr Energy Usage (kWh/ft)	Suction Temperature @ Case Outlet (°F)	Superheat Set Point @ Bulb (°F)	Discharge Air (°F)	Discharge Air Velocity (FPM)
4'	9.5	---	---	---	85
6'	15.9	---	---	---	100

NOTES:

- "---" Indicates that the feature is not an option on this case model and/or the data is not yet available at this time.
- Listed discharge air velocity represents the average velocity at the peak of defrost measured from front facing discharge honeycomb.
- 6' length requires two condensing units.
- LRA - Locked Rotor Amps
- RLA - Running Load Amps
- DRS - Dry Rear Storage

2017 DOE COMPLIANT

ALL MEASUREMENTS ARE TAKEN PER ASHRAE-72-2005 SPECIFICATIONS. HILLPHOENIX REFRIGERATED DISPLAY CASES FOR SALE IN THE UNITED STATES MEET OR EXCEED DEPARTMENT OF ENERGY 2017 REQUIREMENTS.

PT-SC

Rev. Date	Rev. #	Rev. Title
10-08-20	1	NEW STANDARDS

SECOND NATURE NATURAL
Clearvoyant LED SYSTEM
Hillphoenix a DOVER company

PT-SC

Self-Service Open Multi-Deck Merchandiser w/ Food Prep
4' & 6' (Bakery/Deli/Sushi)

R-290 ECO FRIENDLY

CONDENSING UNIT DATA										
	Case Length	Volts	Phase	HP	RLA (Amps)	LRA (Amps)	Refrig.	Grams	Condenser Fans	
									Amps	Watts
Base	4'	115	1	---	6.10	42	R290	134	0.53	30
Base	6'	115	1	---	5.30	32	R290	112 (x2)	0.86	30
DRS	4'	115	1	---	6.10	42	R290	118	0.53	30
DRS	6'	115	1	---	5.30	32	R290	118 (X2)	0.86	30

DEFROST CONTROLS							
		Electric Defrost		Timed-Off Defrost		Hot Gas Defrost	
Defrosts Per Day	Run-Off Time (Min)	Fail-Safe (Min)	Termination Temp (°F)	Fail-Safe (Min)	Termination Temp (°F)	Fail-Safe (Min)	Termination Temp (°F)
6	---	---	---	40	45	---	---

2017 DOE COMPLIANT

NSF

c UL us

ALL MEASUREMENTS ARE TAKEN PER ASHRAE-72-2005 SPECIFICATIONS. HILLPHOENIX REFRIGERATED DISPLAY CASES FOR SALE IN THE UNITED STATES MEET OR EXCEED DEPARTMENT OF ENERGY 2017 REQUIREMENTS.

PT-SC

Rev. Date	Rev. #	Rev. Title
10-08-20	1	NEW STANDARDS

SECOND NATURE NATURAL

Clearvoyant LED SYSTEM

Hillphoenix a dover company

PT-SC

Self-Service Open Multi-Deck Merchandiser w/ Food Prep
4' & 6' (Bakery/Deli/Sushi)

R-290 ECO FRIENDLY

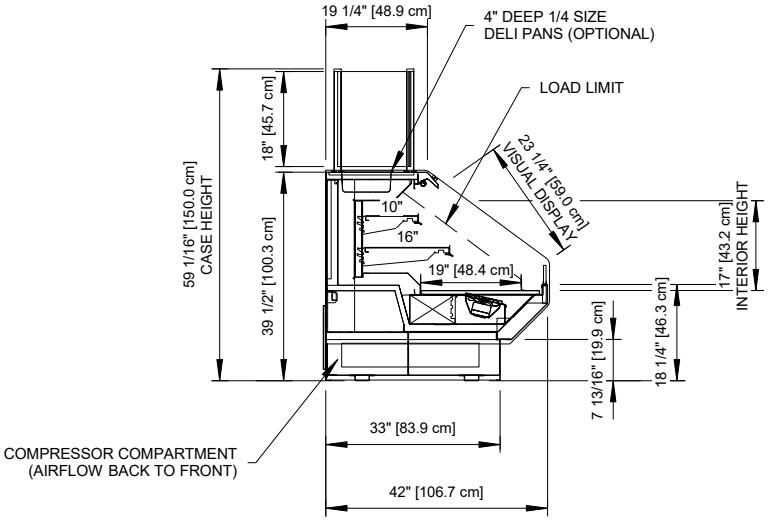

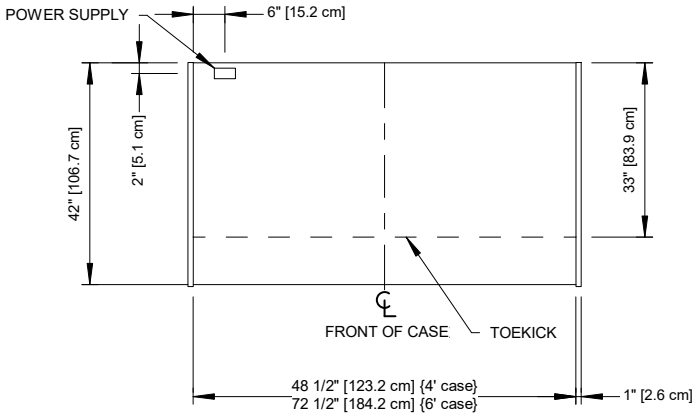

NOTES:

- Shown with optional deli pans.

2017 DOE COMPLIANT

ALL MEASUREMENTS ARE TAKEN PER ASHRAE-72-2005 SPECIFICATIONS. HILLPHOENIX REFRIGERATED DISPLAY CASES FOR SALE IN THE UNITED STATES MEET OR EXCEED DEPARTMENT OF ENERGY 2017 REQUIREMENTS.

PT-SC

Rev. Date	Rev. #	Rev. Title
10-08-20	1	NEW STANDARDS

SECOND NATURE NATURAL
Clearvoyant LED SYSTEM
Hillphoenix a Dover company

PT-SC-DRS

Self-Service Open Multi-Deck Merchandiser w/ Food Prep
4' & 6' (Bakery/Deli/Sushi)

R-290 ECO FRIENDLY

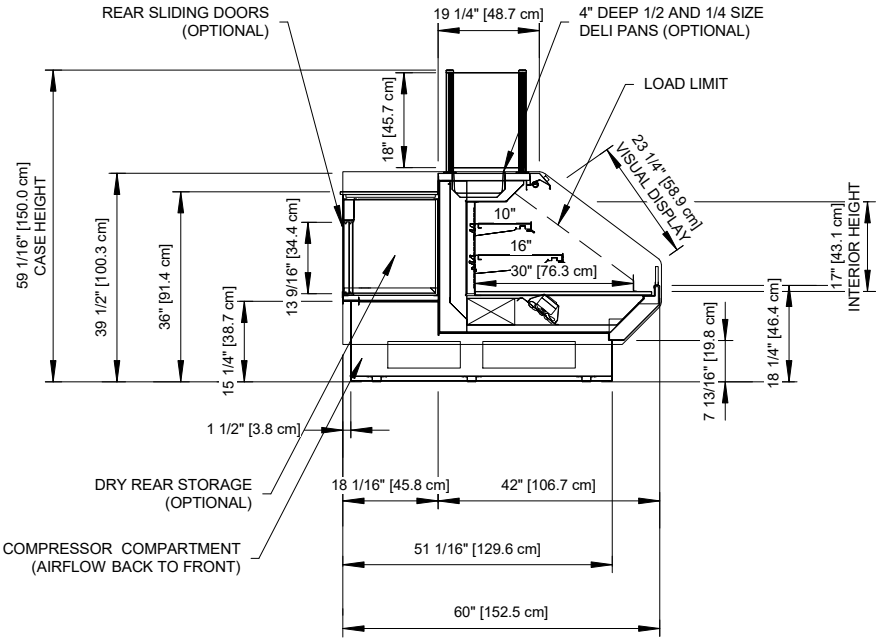

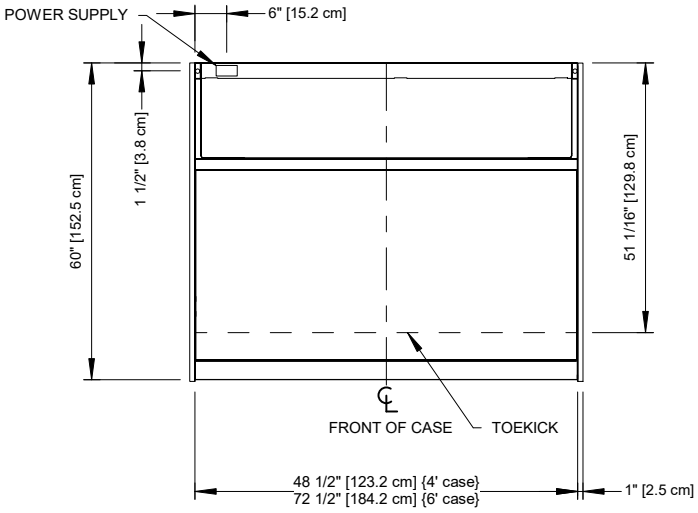

NOTES:

- Shown with optional rear storage and deli pans.

2017 DOE COMPLIANT

ALL MEASUREMENTS ARE TAKEN PER ASHRAE-72-2005 SPECIFICATIONS. HILLPHOENIX REFRIGERATED DISPLAY CASES FOR SALE IN THE UNITED STATES MEET OR EXCEED DEPARTMENT OF ENERGY 2017 REQUIREMENTS.

PT-SC-DRS

Rev. Date	Rev. #	Rev. Title
10-08-20	1	NEW STANDARDS

SECOND NATURE NATURAL
Clearvoyant LED SYSTEM
Hillphoenix a DOVER company

Thank you for choosing Hillphoenix for your food merchandising needs. This handbook contains important technical information and will assist you with the installation and operation of your new Hillphoenix specialty cases. By closely following the instructions, you can expect peak performance; attractive fit and finish; and long case life.

We are always interested in your suggestions for improvements (e.g. case design, technical documents, etc.). Please feel free to contact our Marketing Services group at the number listed below. Thank you for choosing Hillphoenix, and we wish you the very best in outstanding food merchandising.

CASE DESCRIPTION

This manual specifically covers the PT-SC (R-290) bakery, deli and sushi application self-service open multi-deck merchandiser with food prep.

STORE CONDITIONS

Hillphoenix cases are designed to operate in an air-conditioned store that maintains a 75°F (24°C) store temperature and 55% (max) relative humidity (ASHRAE conditions). Case operation will be adversely affected by exposure to excessively high ambient temperatures and/or humidity.

REFRIGERATION SYSTEM OPERATION

Air-cooled condensing units require adequate ventilation for efficient performance.

THIS UNIT CONTAINS R-290 FLAMMABLE REFRIGERANT. USE CAUTION WHEN HANDLING, MOVING OR SERVICING THE DISPLAY CASE. AVOID DAMAGING THE REFRIGERANT TUBING WHICH COULD INCREASE THE RISK OF A LEAK.

SHIPPING CASES

Transportation companies assume all liability from the time a shipment is received by them until the time it is delivered to the consumer. Our liability ceases at the time of shipment.

RECEIVING CASES

Examine fixtures carefully and in the event of shipping damage and/or shortages, please contact the Service Parts Department at the number listed below.

CASE DAMAGE

Claims for obvious damage must be 1) noted on either the freight bill or the express receipt and 2) signed by the carrier's agent; otherwise, the carrier may refuse the claim. If damage becomes apparent after the equipment is unpacked, retain all packing materials and submit a written request to the carrier for inspection within 14 days of receipt of the equipment. **Failure to follow this procedure will result in refusal by the carrier to honor any claims with a consequent loss to the consumer.**

If a UPS shipment has been damaged, retain the damaged material, the carton and notify us at once. We will file a claim.

LOST/MISSING ITEMS

Equipment has been carefully inspected to insure the highest level of quality. Any claim for lost/missing items must be made to Hillphoenix within 48 hours of receipt of the equipment. When making a claim please use the number listed below.

SERVICE PARTS & TECHNICAL SUPPORT

For service parts questions regarding our cases, please contact our Service Parts Department at 1-844-HPX-PART (1-844-479-7278) or dfr-ia-parts@doverfoodretail.com

For technical questions regarding our cases, please contact our Technical Support Department at 1-833-280-5714.

CONTACTING THE FACTORY

If you need to contact Hillphoenix regarding a specific fixture, be certain that you have both the case model number and serial number. (This information can be found on the data tag, located at the top-left interior, rear exterior panel or interior rear lower storage of the case. *Location may vary based on case design.)*

Hillphoenix Specialty Products
703 Franklin Street, PO Box 478
Keosauqua, IA 52565
Website: www.hillphoenix.com

LOCATION

This refrigerated display case has been designed for displaying and storing perishable food product. It is engineered for air-conditioned stores with a maximum ambient of 75°F and 55% relative humidity.

When selecting the location for placement of this case, avoid the following conditions:

Excessive Air Movement

1. Doors
2. Air-conditioned vents
3. Other air sources

Excessive Heat

1. Windows
2. Sun
3. Flood lamps 8 feet or less from the product
4. Other heat sources

FLOOR PREP

1. Ask the general contractor if your current copy of the building dimensions are the most recently issued. Also, ask for the points of reference from which you should take dimensions to locate the cases.
2. Using chalk lines or a laser transit, mark the floor where the cases are to be located for the entire lineup. The lines should coincide with the outside edges of the case feet.
3. Move case as close as possible to its permanent location. Remove all crating and shipping braces above the shipping pallet. Loosen the plastic dust cover from the pallet, but leave cover over the case to protect it while removing the case from the pallet.
4. The power cord shipping brace (Fig. 1) can be removed with a screw gun. As for case shipping braces, the same would be applied with sled runner or caster constrction. If the braces are metal brackets or locks they can be removed with a screw gun. If they are wood blocks they can be removed with a J-bar. **Note: Shipping braces are normally located at each corner of the case. Some case models with casters will use bracing that surrounds the casters entirely and some will use braces that affix to the toekicks at each corner. (Shipping braces used vary and are based on case design for best transport.)**
5. Carefully, if horizontal supports, lift case up and off the pallet. Remove dust cover. Installation hardware ships in a marked packet located inside the case. Remove dust cover. Installation hardware ships in a marked packet located inside the case. (Hillphoenix self-contained display cases are sometimes designed with casters. In most situations, one or two persons can easily move the case into position.) If there are casters simply roll them on to the store floor to the proper staging area. First remove all crating then all sled runner, caster, and/or power cord shipping braces. (Dependent on case design.)

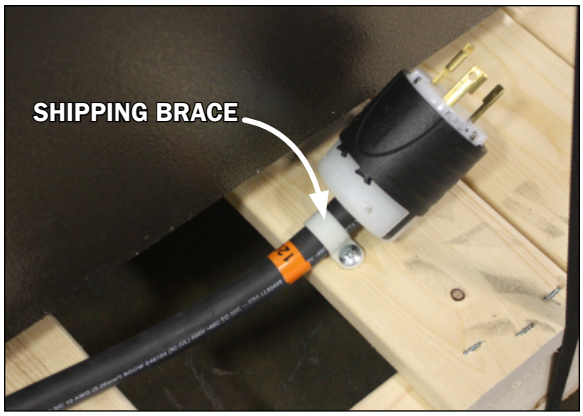

Fig. 1 Power cord shipping brace

6. Leveling is necessary to ensure proper operation of the refrigeration system and drainage of the condensate. Locate the highest point on the positioning lines as a reference for determining the proper height of the shim-pack levelers. A laser transit is recommended for precision and requires just one person. Level adjustable feet by twisting, if applicable, or shim as necessary under vertical stationary or caster supports as this will help ensure that the case is not settling over time.

⚠ CAUTION

Failure to properly level the case could result in lack of proper condensation drainage leading to failure of the unit.

7. Locate horizontal or vertical (caster) support positions along the chalk line (Fig. 2). Spot properly leveled shim packs at each support location.

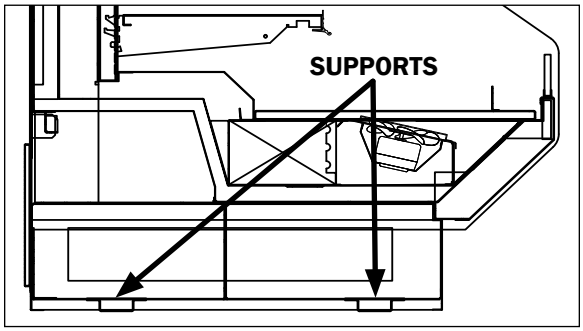

Fig. 2 Horizontal (sled runner) or vertical (caster) supports

8. (SLED RUNNERS) If necessary, drill a hole in each end of every horizontal support (Fig. 3) and fasten to the floor with concrete anchors. **Note: The holes do not need to be in the exact locations specified here. Be sure that the**

anchors are close to the end of the horizontal supports and at each corner of the case.

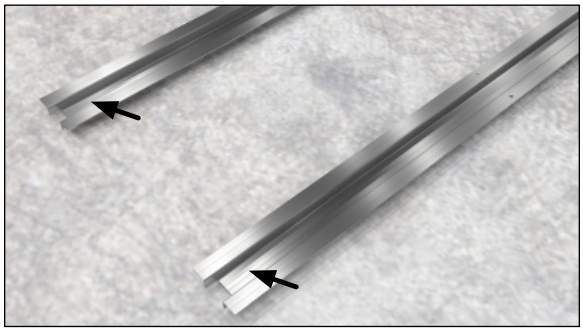

Fig. 3 Seismic anchoring locations (sled runners)

9. (CASTERS) If necessary, attach two brackets at two separate corners of the case (Fig. 4) and fasten to the floor with concrete anchors. **Note: The brackets do not need to be affixed in the exact locations specified here. However, be sure that the anchors are close to the corners and that at least two brackets are used, one at each corner.** You can use more than two brackets for anchoring if you want further support this way.

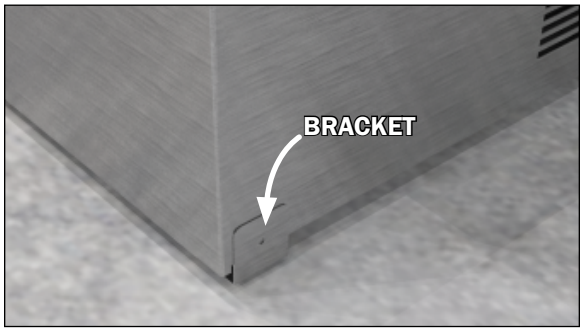

Fig. 4 Seismic anchoring locations (caster brackets)

⚠ CAUTION

Locate the horizontal or vertical (caster) supports under unit before removing from pallet. Failure to do so will damage the finished metal if correct lift points are not identified prior to removal.

⚠ CAUTION

These cases are not designed for excessive external weight. Do not walk on top or inside of cases. Doing so may result in case damage and/or personal injury.

LINE-UP & INSTALLATION

Single Case

1. Move the case into position. Using a “J” bar, raise the end of the case (under cross support), and lower the horizontal support on to the shim packs. Repeat on the other end of the case.

⚠ WARNING

Be certain that your hands and feet are out of the way before lowering the case. Failure to do so may result in serious injury.

2. Once the case is properly placed on the shim packs, check the vertical plumb of the case by placing a bubble level on the rear wall. Add/remove shim packs as needed. For the horizontal level, repeat this process after placing the bubble level on the front sill.
3. Install the bumper, if applicable, into pre-attached bumper track and snap into place. (Most self-contained cases ship with bumper pre-installed.)
4. After sufficient time has passed to allow for bumper shrinkage, cut away the excess bumper for final fit and finish. Be certain to use an appropriate cutting tool (tubing- or PVC-cutter) to ensure a smooth cut.
5. Install case shelves and reconnect lights. Be aware that differing shelf configurations will affect energy consumption and case performance.
6. Install toekick/compressor compartment access panel back onto the base of case, if applicable.

⚠ CAUTION

Do not obstruct ventilation around the base of the display case condensing unit. Obstructing could cause the case to not operate correctly and failure to maintain product temperatures.

Multi-Case

1. Remove any shelves (discard the shelf clips) and/or loose items from the cases that may interfere with case joining. Keep all loose items as they will be used later in the installation process.
2. Follow the single-case installation instructions for the first case, excluding #6, then position the next case in the line-up approximately 3’ away.
3. Move the second case to a position that is approximately 6" from the first case, then position case on the shim packs.
4. Push the cases tightly together, then lightly bolt them together through the holes provided (Fig. 5 & 6). Tighten all the joining bolts until all margins are equal. Be careful not to over tighten.

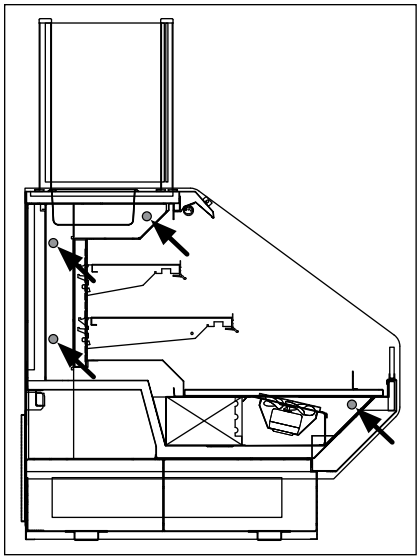

Fig. 5 Bolt locations

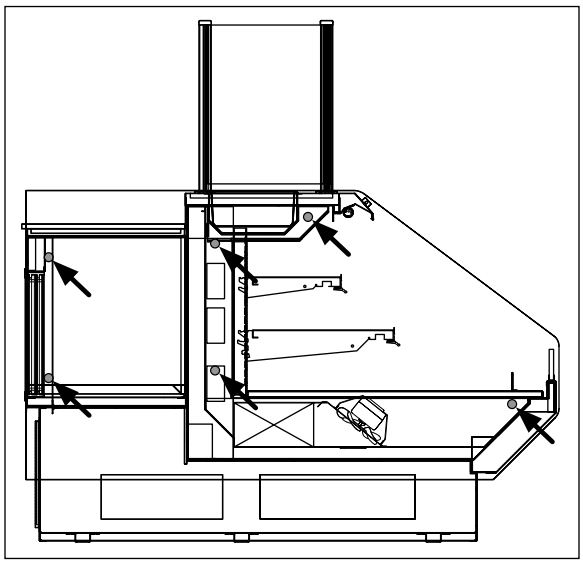

Fig. 6 Bolt locations (DRS)

5. If applicable, the stub-up location can be found under the tank on the customer left. *See technical reference on pages 5 and 6 for access locations.*
6. Apply case-to-case watershed (supplied) over the end frame seam (Fig. 7). The watershed prevents water from settling in the case joint.
7. Repeat steps 3-6 of this sequence for all remaining cases. Be certain to properly level all cases.
8. Properly align the front panels as needed, then install, if applicable, front panel trim (supplied).
9. Install the bumper into pre-attached bumper track and snap into place.
10. After sufficient time has passed to allow for bumper shrinkage, cut away the excess bumper for final fit and finish. Be certain to use an appropriate cutting tool (tubing- or PVC-cutter) to ensure a smooth cut.
11. Install case shelves and reconnect lights. Be aware that differing shelf configurations will affect energy consumption and case performance.
12. Install toekick/compressor compartment access panel back onto the base of case, if applicable.

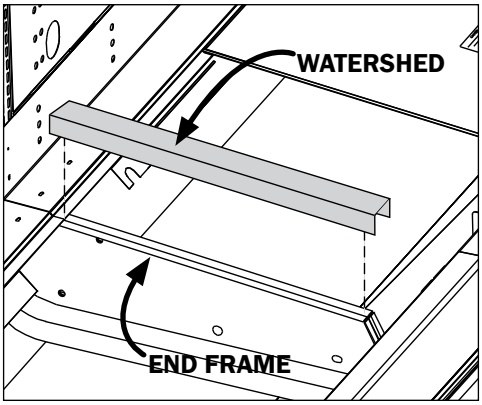

Fig. 7 Sealing the pipe chase

⚠ CAUTION

Installation of 3rd-party materials may result in diminished case performance.

ELECTRICAL

Electrical hookups are made through the power supply box that can be accessed by removing the lower exterior rear panel.

When connecting to the power supply on the case, field wiring should exit box from the side furthest away from case wiring to allow more room inside for wiring connections. The case must be grounded. *For more detailed electrical wiring information (see Appendix A1).*

Prior to plugging in and starting up the case always check the data tag located on the left end exterior panel or top interior of the case, as well as the voltage label found on the main power cord (Fig. 8) which can be found at the rear base panel. **Note: Check that the voltage of the receptacle you are going to use for power and the voltage required for the case match.**

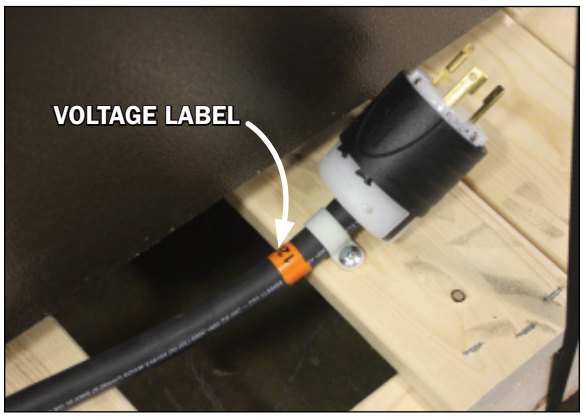

Fig. 8 Main power cord voltage label

⚠ CAUTION

Prior to plugging in and starting up the case. Be certain that the voltage of the receptacle you are going to use and the voltage required for the case match. Failure to do so may result in case/system damage.

⚠ CAUTION

Be certain that all electrical connections are compliant with local codes.

⚠ DANGER

CAUTION, RISK OF ELECTRIC SHOCK. If the cord or plug becomes damaged, replace only with a cord and plug of the same type.

REFRIGERATION & COMPRESSOR COMPARTMENT

A bottom mounted compressor compartment can be accessed by removing the front or rear panel (Fig. 9). *See Appendices for full instructions on how to program the Carel electronic controller.*

Access locations and/or R-290 compartment configurations will vary based on case design. *See technical reference on pages 5 and 6 for access locations and page 12 for a compressor compartment diagram.*

Fig. 9 Compressor compartment

⚠ CAUTION

Be sure to remove all styrofoam shipping blocks from piping and refrigerant lines. Failure to do so may result in case damage.

⚠ DANGER

When carrying out maintenance tasks inside the refrigerated case or compressor compartment, it is essential to disconnect the power source to the case from the main power.

Pressure Switch & Power Supply

1. After the main power cord (Fig. 8) located at the base panel of the case is plugged in and the power switch (Fig. 10) flipped to ON the case should begin normal operations.
2. After establishing power the light control switch (Fig. 11) (if applicable) located in the upper interior ceiling can be flipped to the ON position. The case should now be fully operational and all lights functioning when in the ON position (if applicable).

⚠ DANGER

ALWAYS CHECK THE THERMOSTAT CURRENT RATING. It may have a limited current, as low as 2A. If necessary protect digital thermostat contacts with a contractor.

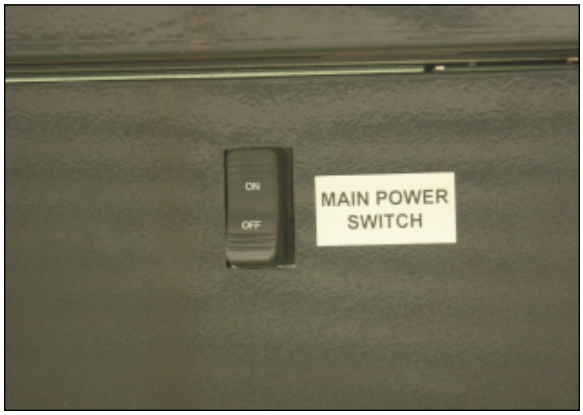

Fig. 10 Lower panel power switch

Fig. 11 Ceiling light switch

R-290 COMPRESSOR COMPARTMENT DIAGRAM

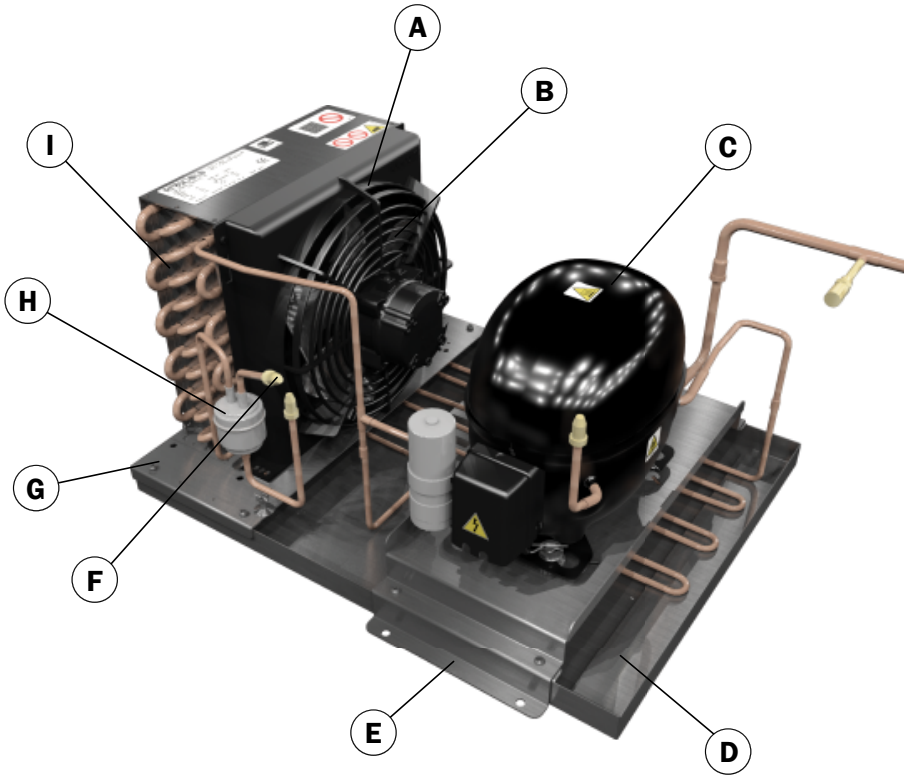

A	Fan Guard	D	Condensate Tray	G	Condenser Bracket
B	Condenser Fan	E	Compressor Bracket	H	Filter Tray
C	Compressor	F	High Side Access	I	Condenser Coil

Note: Access locations and/or compartment configurations will vary based on case design.

GENERAL LIGHTING INFORMATION

Hillphoenix cases are equipped with LED luminaires and feature specially designed light reflectors in the cornice to improve the illumination of products. LED power supplies operate both the cornice and shelf lights and are located above the cornice reflectors.

The lighting system has an ON/OFF switch located in the raceway, power box or at the inside back of the case. Once a case has been properly positioned in the store the lights may be turned on to verify that they are connected and functioning properly.

To ensure peak performance, it is advisable to run the lighting systems only when the store climate control is on and case refrigeration is started. **Note: It is highly recommended that the ambient store temperature not exceed 80°F.**

⚠ DANGER

SHOCK HAZARD

Always disconnect power to case when cleaning, servicing or configuring components of the lighting system. Failure to do so may result in serious injury or death.

⚠ WARNING

Using improper DC power supplies may damage the luminaires, resulting in sub-standard operation and increased chances of safety issues/injury.

⚠ WARNING

Never replace a 24V DC power supply with a T8 or T5 ballast of any kind! Ballasts use alternating current (AC) instead of direct current (DC) and operate at a much higher voltage than is used by this LED system. Doing so will damage the LED system and increases the chance of safety issues/injury.

LED DRIVER/POWER SUPPLY ACCESS

To gain access to the LED driver or power supplies (Fig. 12) remove the lower exterior rear panel. The power supply for the 4' will be in a fixed, upright box. and a slide tray on the 6' model.

REPLACING LED LIGHTS

Once store power is connected the Clearvoyant LED system should operate without the need for any significant maintenance for several years. Should a power supply need to be removed and/or replaced, turn off the power to the case before proceeding. Be certain to replace the power supply with genuine Hillphoenix parts or a comparable UL-listed Class-2 rated regulated 24V DC power supply with 100W output capacity.

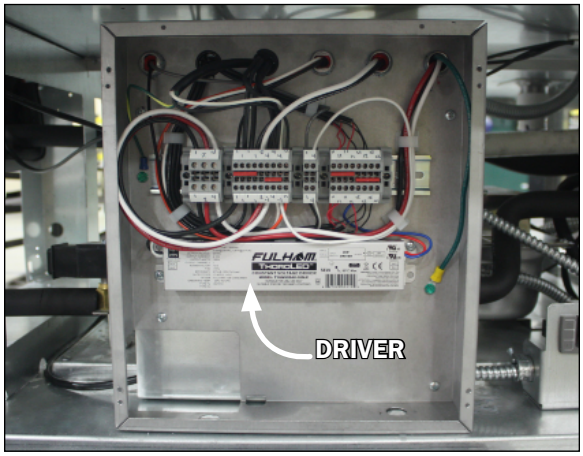

Fig. 12 Clear view of the driver (fixed, upright box)

LED LUMINAIRES

Removing LED luminaires:

1. Unplug the luminaire (Fig. 13).

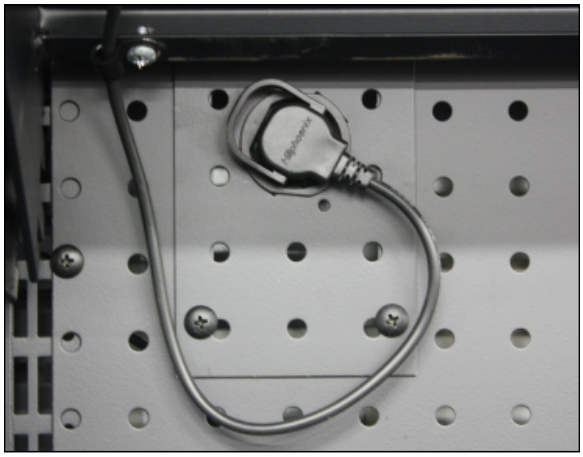

Fig. 13 LED light power cord

2. Remove the screws from the light clamps (Fig. 14) while keeping ahold of the light. Once the screws are removed the light rod will come away from the case with the clamps still holding to the light.
3. Remove the closed clamps and inner rings (Fig. 15) by unclipping the clamp ends located above the screw opening. This will release the grip around the inner ring (Fig. 16) and allow for the two pieces to be separated from one another.
4. Carefully remove the inner rings from around the light rod.

⚠ CAUTION

Too much tension on the inner clamp rings while removing them from an LED light rod may cause breakage. Use only enough tension for removal.

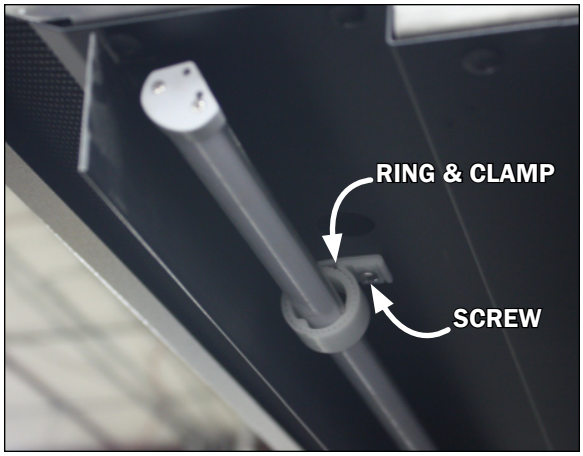

Fig. 14 LED light & ring/clamp

Fig. 15 Closed clamp

Fig. 16 Open clamp

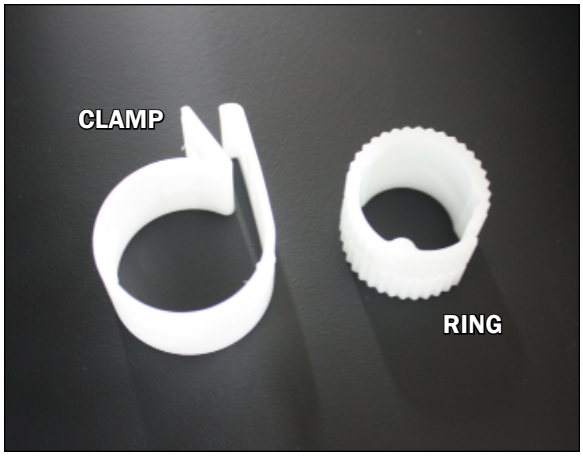

Fig. 17 LED ring and clamp

Re-installing LED luminaires:

1. Place a ring (Fig. 17) around each end of the light rod and rotate until both edges of the rod line-up and snap ahold to the ridges in the ring.
2. Slide a clamp (Fig. 17) over each ring and close them tight around the rings by clipping together the clamp ends located above the screw opening.
3. Line-up the closed clamps (Fig. 15) and light rod with the existing screw holes on the case and re-attach.
4. Rotate the light rod into desired position after the clamps are firmly re-attached.

Before powering-up the case, be certain that all of the steps listed below have been completed to ensure proper case functionality, safety and compliance with warranty terms.

- ☐ **Have you thoroughly examined the case for shipping damage? (see pg. 7)**
- ☐ **Have you checked to ensure the case is horizontally level? (see pg. 8)**
- ☐ **Have you checked all exposed refrigeration lines to ensure that they are not kinked, dented or rubbing together and have installed the compressor com partment access panel? (see pg. 10)**
- ☐ **Have you checked and verified the voltage of the receptacle you are going to use for power and the voltage required for the case match? (see pg. 11)**
- ☐ **Have you verified the display case switch is in the OFF position prior to plug ging in to the main power source? (see pg. 11)**
- ☐ **Have you reviewed safety warning labels and verified all are present and in good condition?**

After powering-up the case, be certain that all of the steps listed below have been completed to ensure proper case functionality, safety and compliance with warranty terms.

1. **Check case temperature and adjust controller as needed. All display case connections comply with the information/instructions?**
2. **Store the installation manual in the vicinity of the display case itself to where it can be accessed and consulted by all members of staff involved in the use of the refrigerator display case.**
3. **Before placing food in the display case, allow the case to operate for approx imately two (2) hours and ensure the case is at the proper temp before loading.**

AIRFLOW & PRODUCT LOAD

Hillphoenix cases provide maximum product capacity within the refrigerated air envelope. Please keep products within the appropriate load limit.

It is important that you do not overload the food product display so that it impinges on the airflow pattern (Fig. 18). Overloading will cause malfunction and the loss of proper temperature levels. The designed load limit is 3" above the deck for critical temperature products and 6" for non-critical temperature products. *For a technical reference drawings with the load limit line refer to pages 5 and 6.*

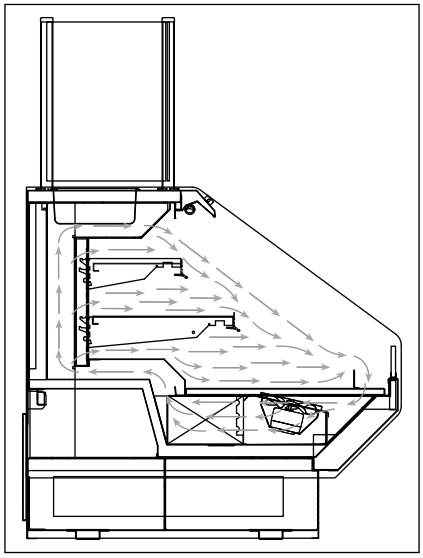

Fig. 18 Airflow pattern

⚠ WARNING

Always keep product within the designated air curtain. Failure to do so may result in case malfunction and product losing proper temperature, resulting in sub-standard operation and increased chances of food contamination.

⚠ CAUTION

Proceed to the loading only once the display case has reached the proper temperature setting.

DEFROST

Cases are equipped with Temperature Terminated Off-Time defrost.

The defrost cycle is very important in that it ensures correct operation of the case. It is activated and controlled by the thermostat which temporarily stops the condensing unit, allowing the evaporator to shed the build-up of ice. The controllers synchronize the defrost between condensing units via the auxiliary ports.

⚠ DANGER

FLAMMABLE

DANGER - Risk of Fire or Explosion. Flammable Refrigerant Used. Do Not Use Mechanical Devices To Defrost Refrigerator. Do Not Puncture Refrigerant Tubing.

CASE CLEANING

A periodic cleaning schedule should be established to maintain proper sanitation, insure maximum operating efficiency, and avoid the corrosive action of food fluids on metal parts that are left on for long periods of time. We recommend cleaning once a week. Further suggestions for case cleaning include the following:

- To avoid shock hazard, be sure all electrical power is turned off before cleaning. In some installations, more than one disconnect switch may have to be turned off to completely de-energize the case.
- All surfaces pitch downward to a deep-drawn drain trough, funneling liquids to the center of the case where the waste outlet is located for easy access. Check the waste outlet to insure it is not clogged before starting the cleaning process and avoid introducing water faster than the case drain can carry it away.
- To clean the LED luminaires, shut off the lights in the case, then wipe the luminaires down with a soft, damp cloth. Avoid using harsh or abrasive cleaners as they may damage the lights. Be certain that the luminaires are completely dry before re-energizing.
- Clean from top to bottom when cleaning the display case to avoid cross contamination.
- If any potentially harmful cleaners are used, be certain to provide a temporary separator (e.g., cardboard, plastic wrap, etc.) between those cases that are being cleaned and those that may still contain product.
- Avoid spraying any cleaning liquids directly on the electrical connections.
- Allow cases to be turned off long enough to clean any frost or ice from coil and pans.
- Remove toekick and clean underneath the case with a broom and a long-handled mop. Use warm water and a disinfecting cleaning solution when cleaning underneath the cases.

⚠ DANGER

SHOCK HAZARD

Always disconnect power to case when servicing or cleaning. Failure to do so may result in serious injury or death.

⚠ CAUTION

Use specific products for disinfection and cleaning: use soft, non-abrasive sponges and rags!

Fans and Pressure Plate

1. Disconnect power to the case and wait for fans to come to a complete stand-still.
2. To reach the fans and pressure plate first remove the base deck with help of the pre-drilled access lift supplied (Fig. 19). **Note: It is recommended that more than one person lift the deck.**

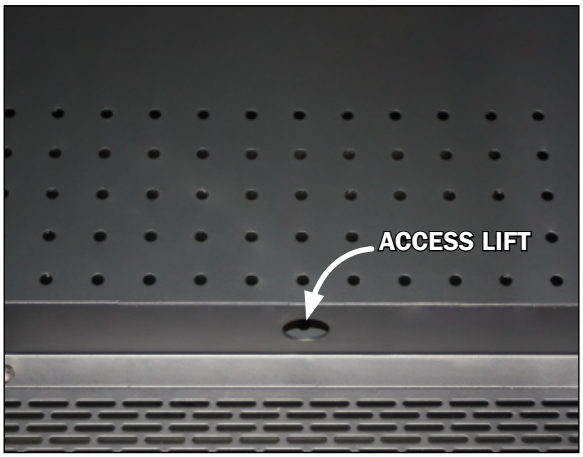

Fig. 19 Base deck pre-drilled access lift

3. To access the underside of the fans first remove the screws on the top ends and front sill of the pressure plate cover (Fig. 20). Lift the pressure plate by use of the provided lift handles (Fig. 20). There are hinges shared between the pressure plate and coil covers. **Note: It is recommended that more than one person lift the pressure plate.** The topside of pressure plate will rest against the topside of the coil cover, exposing the underside of the pressure plate and fans (Fig. 20).
4. Clean as necessary. Use a spray bottle filled with an approved mild detergent and warm water.
5. Be sure to move the pressure plate back to its original position after cleaning and/or inspection is complete.

⚠ CAUTION

Only lift the pressure plate and/or coil cover for a qualified inspector or a trained service provider. Failure to do so may result in damage to the refrigerant system.

⚠ DANGER

When carrying out cleaning work or maintenance on the condensing unit it is essential to disconnect the machine and all its accessories from the main power.

⚠ DANGER

DANGER OF BURNS

Be careful of the elements inside the condensate dissipator pan: this operates at high temperature.

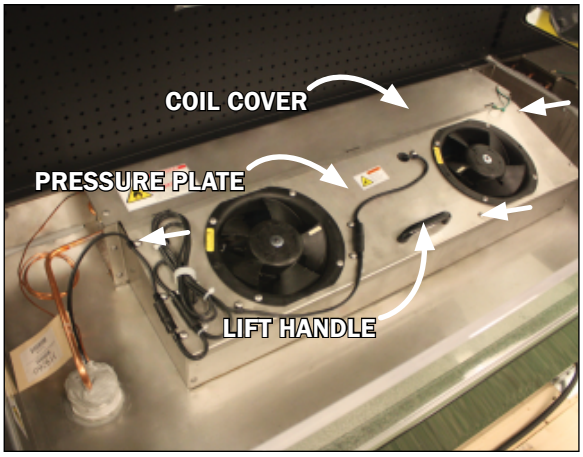

Fig. 20 Pressure plate, coil cover, screws and lift handle

Coil Inspection

1. Disconnect power to the case and wait for fans to come to a complete stand-still.
2. Remove the top two screws at both ends of the coil cover (Fig. 20), as well as the screws from the top ends and front sill of the pressure plate cover (Fig. 20). **Be sure to save the removed screws for reassembly.**
3. Carefully, without bending the sheet metal cover, with the use of the handles provided, gently slide the coil cover with the pressure plate assembly forward to expose the evaporator coil.

⚠ WARNING

Exercise extreme caution when working in a case with the pressure plate removed. The coil contains many sharp edges that can result in severe cuts to the hands and arms.

⚠ WARNING

Exercise extreme caution when working in a case with the coil cover removed. The coil contains many sharp edges that can result in severe cuts to the hands and arms.

4. Clean as necessary. Use a spray bottle filled with an approved mild detergent and warm water. **This location should be accessed by qualified personnel only.**
5. Be sure to screw the coil cover back to its original position after cleaning and/or inspection is complete.

⚠ CAUTION

Always be sure to move the pressure plate and screw the coil cover back to their original position after the cleaning and/or inspection is complete. Failure to do so may result in damage to the refrigerant system.

⚠ DANGER

FLAMMABLE

DANGER - Risk of Fire or Explosion. Flammable Refrigerant Used. Do Not Use Mechanical Devices To Defrost Refrigerator. Do Not Puncture Refrigerant Tubing.

Condenser Air Intake Filter

Clean and remove the debris from the condenser air intake filter monthly. If filter is not cleaned regularly the head pressure will rise and cut all power off to the compressor by means of the pressure switch.

The filter will either have a slide-out screen or pull-off magnetic application. **Note: Prior to cleaning, be sure to remove the filter from the case completely and move to a distance far enough away that no debris will come in to contact with the case or the product inside.** Both can be cleaned with an air hose and/or rinsed with water. Be sure to remove all debris and wait until completely dry before placing back on to the case. (Top mounted compressors will not have an air intake filter.)

⚠ CAUTION

Be sure to clean the condenser air intake filter monthly. Failure to do so may result in loss of normal compressor functions and case damage.

Cleaning Condensate Dissipator Pan

Inspect the dissipator pan (Fig. 21) at least once every six months. Ensure you disconnect the electrical power supply and make sure you DO NOT touch the elements as they reach high temperatures (necessary for evaporation inside the pan).

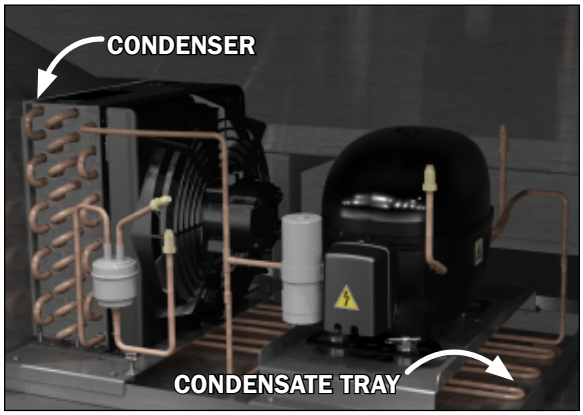

Fig. 21 Cleaning the dissipator pan and condensing unit

Cleaning Condenser

The condensers used on the condensing units gather dust and dirt and must be cleaned regularly. Under normal working conditions this task must be executed at least once a month using a soft-bristled brush and a vacuum cleaner. A dirty condenser will reduce the display case performance: it will also result in increased energy consumption. (Fig. 21)

UNSCHEDULED CASE MAINTENANCE

Unscheduled maintenance concerns all those tasks that cannot normally be carried out by the routine user as specified. Such tasks require qualified personnel with specific technical skills (e.g. refrigeration system specialists, electricians etc.) and must be carried out at least once a year. See the scheduled maintenance table for a list of the main tasks (Fig. 23).

If inspection reveals any rust, cracks and etc...it will be necessary to carry out repairs and/or replacement of parts so that the case meets code and the display case is in prime operating condition. To enhance safety, it is recommended that you always seek the advice of a specialized technician before carrying out any repair work.

PARTS SUBJECT TO WEAR & SPARE PARTS

Most spare parts carry clear, complete ID information. It is important that the refrigerated case parts be replaced by analogous parts of equivalent safety and quality: to order spare parts please contact Hillphoenix, stating the case model and serial number, found in this manual or on the case ID plate, and provide a description of the component and the desired quantity. Refer to the Parts section in the back of the manual for parts ordering and to identify parts that may need to be replaced.

⚠ CAUTION

Do not pressure wash equipment as damage to electrical components may result.

SCHEDULED MAINTENANCE TABLE

Maintenance	Weekly	Monthly	Half Yearly	Yearly
Cleaning case	✓			
Cleaning gas condenser		✓		
Case visual check	✓			
Safety labels visual check	✓			
Check electric system				✓
Check water drainage system.			✓	
Check refrigeration system				✓
General inspection				✓

Fig. 21 Recommended cleaning schedule

INSTRUCTIONS FOR PERSONNEL

In the Event of General Emergency

Immediately inform those in the vicinity of the perceived danger, gesticulating if necessary; cut the electrical power to the cabinet.

In the Event of Fire

In the event that the refrigerated case catches fire or is involved in a fire it is possible to use an extinguisher with a powder-type or CO2 extinguishing agent.

Resetting the Case

To restore normal operation it is necessary to eliminate all the causes of the emergency situation; if necessary repair or replace damaged parts.

Note: If safety devices are tripped it will be necessary to identify the cause before continuing work.

⚠ CAUTION

Do not store or use gasoline or other flammable vapors and liquids in the vicinity of this or any other appliance.

⚠ CAUTION

R-290 flammable refrigerant in use. Improper installation, adjustment, alteration, service or maintenance can cause property damage, injury or death. Read the installation operating and maintenance instructions thoroughly before installing or servicing this equipment.

⚠ DANGER

FLAMMABLE

DANGER - Risk of Fire or Explosion. Flammable Refrigerant Used. Do Not Use Mechanical Devices To Defrost Refrigerator. Do Not Puncture Refrigerant Tubing.

FAILURES AND SHOOTING

Failures

In the event of a failure of mechanical/electrical/refrigeration parts the initial safety conditions must be restored immediately by replacing or repairing such faulty parts.

TABLE OF FAILURES AND SHOOTING

PROBLEM	POSSIBLE CAUSE	SOLUTION
The refrigerated cabinet does not work.	1) the mains circuit breaker is set to OFF; 2) the power line between refrigerated cabinet and power socket is faulty; 3) the switch on the refrigerated cabinet control panel is not switched on.	1) turn the mains power on; 2) make sure the plug is inserted properly in the socket; 3) turn the power switch on the refrigerated cabinet panel to ON.
The refrigerated cabinet does not cool enough.	1) the temperature thermostat is adjusted incorrectly; 2) the refrigerated cabinet has been filled too much 3) the condensing unit is clogged with dust 4) the evaporator is covered in ice	1) reprogram the temperature thermostat; 2) remove goods and observe the maximum load level; 3) clean the condensing unit with a soft-bristled brush and vacuum cleaner 4) carry out a defrost cycle.
The refrigerated cabinet cools too much.	1) the temperature thermostat is adjusted incorrectly.	1) reprogram the temperature thermostat;
The refrigerated cabinet runs continuously.	1) the temperature thermostat is adjusted incorrectly; 2) the refrigerated cabinet has been filled too much and is preventing correct air circulation.	1) reprogram the temperature thermostat; 2) remove goods and observe the maximum load level.

SAFETY DEVICES

⚠ WARNING

It is absolutely forbidden for the user to tamper with safety devices. Before using the refrigerated case check that mechanical safety covers are properly in place. Any tampering shall render the warranty null and void and exonerate Hillphoenix from any liability with regard to users of the refrigerated case.

Only maintenance personnel may carry out maintenance tasks involving safety devices. These tasks are listed below.

SAFETY DEVICE	SCOPE OF INTERVENTION	ACTION
Incorporated over-pressure cut-out	On incorporated condenser unit compressor	Cuts the electrical power of the compressor if the pressure of the refrigerant rises above the safety limits.
Fixed cover on electrical control panel. Remove only with aid of tools	Electrical control panel	Prevents access to live parts. Electrical danger warning sign applied (see "DESCRIPTION OF DANGERS AND RISKS RESIDUAL)
Fixed safety gratings. Remove only with aid of tools	On evaporator fans.	Prevents access to fans when they are running or slowing down to a stop.

DESCRIPTION OF DANGERS AND RISKS RESIDUAL

Residual Dangers

Dangers that have not been reduced/eliminated with the safety measures adopted on the refrigerated case can nevertheless be reduced/eliminated as long as users apply proper managerial practices. Users must:

☐ Ensure that all safety warning and labels are always in good condition; inspect them periodically and have them replaced whenever necessary.

☐ Do not install any spare parts that are not identical to the originals or of equivalent performance.

☐ Do not carry out any modifications or structural work without approval from Hillphoenix or a qualified field service technician.

☐ Should the refrigerated case be dented, inspect the structure visually or have qualified personnel carry out an inspection.

After a long period of disuse have a qualified field service technician carry out an inspection of the case to check that it is in good condition and working properly.

Residual Risks

While the refrigerated case has been designed to ensure maximum safety, there nevertheless remain some residual risks. Hillphoenix has identified the main **dangers and residual risks for users and maintenance personnel** as follows in chart below:

SCHEDULED MAINTENANCE TABLE

DESCRIPTION OF RESIDUAL RISK	CAUSE	SAFETY MEASURES
Danger of falls in area surrounding the cabinet	Presence of: stairs, columns etc. and/or slippery floors and objects and/or work tools	Mark out the relevant zones and highlight them with warning signs and symbols (e.g. yellow/black striped marker tape on stairs etc.) that are visible during both routine use and maintenance.
Danger of objects accidentally falling	Haphazard storage of tools/objects.	Use tool boxes in work areas. Ensure personnel are trained.
Danger of injury to hands, arms, legs and head	During cleaning and maintenance there may be objects or parts of the cabinet protruding from the case itself (e.g. glass covers open during cleaning)	Mark out the work area with appropriate barriers. Always use the recommended personal safety devices.
Risk of refrigerating gas leaks	Accidental damage to pipes	Immediate shutdown of case operation. Disconnect electrical power supply. Contact a service technician.

REFRIGERANT

This piece of equipment uses a R-290 Refrigeration system. This equipment has been clearly marked on the serial tag the type of refrigerant that is being used. There is also a warning labels stating that the unit contains R-290 refrigerant.

No smoking or open flames when servicing this equipment. If needed, use a CO2 or dry=power type fire extinguisher

Only authorized service technician, certified in R-290 system should service this equipment.

MANIFOLD SET
A R-134A manifold set can be used for servicing this equipment.

REFRIGERANT RECOVERY
Follow all national and local regulations for R-290 refrigerant recovery.

LEAKING CHECKING AND REPAIR
Leak check an R-290 system the same way you would an R-134a or R-404A system with the following exceptions.

1. Do not use a Halid leak detector on a R-290 system.
2. Electronic leak detector must be designated specifically for combustible gas.

Use of a bubble solution or an ultrasonic leak detector are acceptable.

When repairing a leak, it is recommended using oxygen free dry nitrogen with a trace gas not exceeding 200PSI.

When accessing an R-290 system, proper charge is to be weighed into the system and the system is to be leak checked afterwards.

The R-290 equipment must have red process tubes and other devices through which the refrigerant is serviced, such as any service port. This color marking must remain on the equipment. If marking is removed, it must be replace and extend at least 2.5 centimeters (1”) from the compressor.

⚠ CAUTION

Component parts shall be replaced with like components. Service work shall be done by factory authorized service personnel, so as to minimize the risk of possible ignition due to incorrect parts or improper service.

CHARGING

Follow the charge amount specified on the data tag. It is recommended to use the shortest hoses possible to prevent undercharging.

- Ensure the system is sealed and leak checked
- Evacuate system to a minimum 500 micron
- Weigh in correct charge
- Leak check the system again
- Bleed the refrigerant from the high side hose to the low side hose
- Disconnect the hoses
- Remove line taps

⚠ DANGER

FLAMMABLE
DANGER - Risk of Fire or Explosion. Flammable Refrigerant Used. Do Not Use Mechanical Devices To Defrost Refrigerator. Do Not Puncture Refrigerant Tubing.

⚠ CAUTION

It is highly recommended that a technician servicing a case with HC refrigerant is aware of safety considerations and maintenance procedures on how to safely handle flammable refrigerants.

Contact the Service Parts Department at:

1-844-HPX-PART (1-844-479-7278)
or
dfr-ia-parts@doverfoodretail.com

Provide the following information about the part you are ordering:

- **Model number and serial number* of the case for which the part is intended.**
- **Length of the part (if applicable).**
- **Color of part (if painted) or color of polymer part.**
- **Whether part is for left or right-hand application.**
- **Quantity**

***Data tag is located on the left end exterior panel or top interior of the case.**

If the parts are to be returned for credit, contact the Parts Department. Do not send parts without authorization.

A1 ..... Wiring Information
B1-B2 ..... Carel Operating Instructions
C1 ..... Sporlan Pressure-Temperature Chart (R290)
D1 ..... Parts List

A1: WIRING DIAGRAM

TBD

B1: CAREL OPERATING INSTRUCTIONS

+050004140 - rel. 1.6 - 28.10.2020

EASY (PJEZ* and PQEZ*) - controlli elettronici per unità statiche/ventilate a normale/bassa temperatura / electronic controller for static/ventilated normal/low temperature units

CAREL

Dimensioni (mm) / Dimensions (mm)

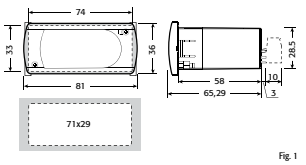

Fig. 1

Montaggio a pannello / Panel mounting

Frontale (con 2 viti ø 2,5x12 mm) / Front (with 2 screws ø 2,5x12 mm)

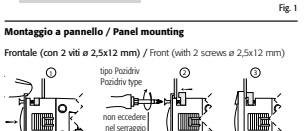

Fig. 2

Da dietro (con 2 staffe posteriori) / Rear (with 2 quick-fit side brackets)

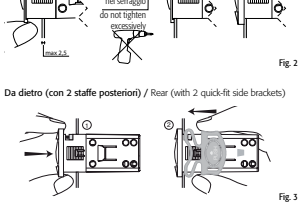

Fig. 3

Collegamenti elettrici / Electrical connections

P(J,Q)EZ(S, X)*

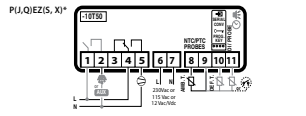

P(J,Q)EZ(S, X)* Compressor relay 2HP

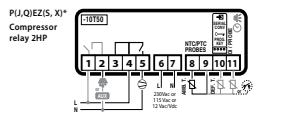

P(J,Q)EZ(C, Y)*

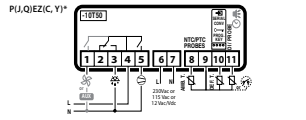

P(J,Q)EZ(M)*

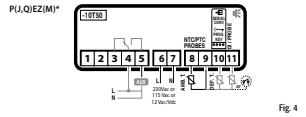

Fig. 4

serial conv.	IROPZ48S50
prog. key	IROPZKEY* or PSOPZKEY*
12 Vac/Vdc	transformers: TRA12UNI11 or TRA12VDE00

Tabella allarmi

Codice allarme	buzzer e relè allarme	LED	Descrizione allarme	Parametri coinvolti
E0	attivi	ON	errore sonda 1= regolazione	-
E1	non attivi	ON	errore sonda 2= defrost	(d0 = 0 / 1)
E2	non attivi	ON	errore sonda 3= condensatore	[A4=10]
IA	attivi	ON	allarme esterno	[A4 = 1] [+A7]
dOr	attivi	ON	allarme porta aperta	[A4 = 7/8][+A7]
LO	attivi	ON	allarme bassa temperatura	[AL] [Ad]
HI	attivi	ON	allarme alta temperatura	[AH] [Ad]
EE	non attivi	ON	errore parametri macchina	-
EF	non attivi	ON	errore parametri funzionamento	-
Ed	non attivi	ON	defrost finito per timeout	[dP] [d1] [d4] [A8]
dF	non attivi	OFF	defrost in esecuzione	(d6=0)
cht	non attivi	ON	pre-allarme condensatore sporco	[A4=10]
CHt	attivi	ON	allarme condensatore sporco	[A4=10]
EtC	non attivi	ON	allarme orologio	se fasce attive

Table of alarms

Alarm code	buzzer and alarm relay	LED	Description	Parameters involved
E0	active	ON	probe 1 error= control	-
E1	inactive	ON	probe 2 error= defrost	(d0 = 0 / 1)
E2	inactive	ON	probe 3 error= condenser	[A4=10]
IA	active	ON	external alarm	[A4 = 1] [+A7]
dOr	active	ON	open door alarm	[A4 = 7/8][+A7]
LO	active	ON	low temperature alarm	[AL] [Ad]
HI	active	ON	high temperature alarm	[AH] [Ad]
EE	inactive	ON	unit parameter error	-
EF	inactive	ON	operating parameter error	-
Ed	inactive	ON	defrost ended by timeout	[dP] [d1] [d4] [A8]
dF	inactive	OFF	defrost running	(d6=0)
cht	inactive	ON	condenser dirty pre-alarm	[A4=10]
CHt	active	ON	condenser dirty alarm	[A4=10]
EtC	inactive	ON	clock alarm	if bands active

Smaltimento del prodotto: L'apparecchiatura (o il prodotto) deve essere oggetto di raccolta separata in conformità alle vigenti normative locali in materia di smaltimento

Disposal of the product: The appliance (or the product) must be disposed of separately in accordance with the local waste disposal legislation in force.

(ITA) Descrizione

PJEZ* e PQEZ* (mod. S, C, M, Y, X) rappresenta una gamma di regolatori elettronici a microprocessore con visualizzazione a LED realizzati per la gestione di unità frigorifere, vetrine e banchi frigo. I regolatori PJEZ* sono dotati di relè standard. I regolatori PQEZ* sono progettati specificatamente per l'utilizzo in applicazioni con gas refrigeranti infiammabili.

Modelli disponibili:

- P(J,Q)EZS*, indicati per la gestione di unità frigorifere statiche, prive di ventilatore sull'evaporatore, funzionanti con temperature sopra lo 0°C;
- P(J,Q)EZC*, indicati per la gestione di unità frigorifere ventilate in bassa temperatura.
- P(J,Q)EZ(Y, X)*, indicati per la gestione di unità frigorifere statiche, prive di ventilatore, funzionanti a bassa temperatura;
- P(J,Q)EZM*, soluzione per la semplice misurazione della temperatura.

Nota: mod. Y= relè collegati elettronicamente all'interno tra loro; mod. X= relè indipendenti.

Caratteristiche tecniche

alimentaz. (*)	230 Vac +10 /-15% 50/60 Hz; 115 Vac +10 /-15% 50/60 Hz 12 Vac +10/-15% 50/60 Hz classe 2; 12 Vdc +10/-20% classe 2
potenza nom.	3,5 VA
ingressi (*)	sonda NTC o PTC in 1 o 3 ingressi. Ingresso digitale in alternativa a terza sonda
uscite relè (*)	

	PJEZ	PQEZ
relè 2 Hp	UL: 12 A Res. 12 FLA 72 LRA - 240 Vac(***). UL: 12 A Res. 10 FLA 60 LRA - 240 Vac(****) EN60730-1: 10(10) A 250 Vac (**)	UL60730: 12 A Res. 8 FLA 48 LRA - 240 Vac, EN60730: 10(6) A 250 Vac
relè 16 A	UL: 12 A Res. 5 FLA 30 LRA - 240 Vac C300, EN60730-1: 12(2) A NO/NC, 10(4) A up to 60 °C NO, 2(2) A CO - 250 Vac	UL60730: 12 A Res. 5 FLA 30 LRA - 240Vac C300, EN60730: 12(2) A NO 100k cycles, 12(2) A NC 30k cycles, 2(2) A CO 30k cycles - 250 Vac
relè 8 A	UL: 8 A Res. 2 FLA 12 LRA - 240 Vac C300, EN60730-1: 8(4) A NO, 6(4) A NC, 2(2) A CO - 250 Vac	UL60730: 8 A Res. 2 FLA 12 LRA - 240 Vac C300, EN60730: 8(3) A NO, 6(3) A NC, 2(2) A CO - 250 Vac
tipo sonda (*)	NTC Std CAREL 10 KΩ a 25 °C, PTC Std CAREL 985 Ω a 25 °C	
connessioni (*)	morsetti fissi a vite per cavi con sez. da 0,5 mm² a 1,5 mm². Morsetti estraibili per blocchetti a vite o con contatto a crimpare (sez. cavo fino a 2,5 mm²). Corrente nominale massima per morsetto 12 A.	
montaggio (*)	per terminale: mediante viti dal frontale o con staffe posteriori	
visualiz.	display LED 3 cifre con segno (-199 ... 999) e punto decimale; sei LED di stato	
condizioni di funzionamento	-10T50 °C - umidità <90% U.R. non condensante	
condizioni di immagazzinamento	-20T70 °C - umidità <90% U.R. non condensante	
intervallo di rilevazione	-50T90 °C (-58T194 °F) - risoluzione 0,1 °C/°F	
grado di protezione frontale	montaggio a quadro con guarnizione: IP65 tipo 1	
contenitore	terminale plastico, 81x36x65 mm	
classificazione secondo la protezione contro le scosse elettriche	Classe II per incorporamento adeguato	
inquinamento ambientale	normale	
PTI dei materiali di isolamento	250 V	
periodo delle sollecitazioni elettriche delle parti isolanti	lungo	
categoria di resistenza al calore e al fuoco	categoria D (UL94 - V0)	
immunità contro le sovratensioni	categoria 1	
tipo di azione e disconnessione	contatti relè 1C	
n.ro di cicli di manovra delle operazioni automatiche relè (*)	EN60730: 100.000 operazioni UL: 30.000 operazioni (250 Vac)	
classe e struttura del software	Classe A	
pulizia dello strumento	utilizzare esclusivamente detergenti neutri ed acqua.	
lunghezza max. cavi	seriale: 1 km - sonde: 30 m - relè: 10 m	

AVVERTENZA:
Non passare cavi di potenza a meno di 3 cm dalla parte inferiore del dispositivo o dalle sonde; **per le connessioni usare solo cavi di rame**.
(*) Le caratteristiche indicate si differenziano a seconda del modello.
(**) 1 OFF minimo tra due start motore deve essere maggiore di 60 s.
(***) solo per i modelli PJEZ(M,S,X)*
(****) solo per i modelli PJEZ(C, Y)*

AVVERTENZE IMPORTANTI: Il prodotto CAREL è un prodotto avanzato, il cui funzionamento è specificato nella documentazione tecnica fornita col prodotto o scaricabile, anche anteriormente all'acquisto, dal sito internet www.carel.com. Il cliente (costruttore, progettista o installatore dell'equipaggiamento finale) si assume ogni responsabilità e rischio in relazione alla fase di configurazione del prodotto per il raggiungimento dei risultati previsti in relazione all'installazione e/o equipaggiamento finale specifico. La mancanza di tale fase di studio, la quale è richiesta indicata nel manuale d'uso, può generare malfunzionamenti nei prodotti finali di cui CAREL non potrà essere ritenuta responsabile. Il cliente finale deve usare il prodotto solo nelle modalità descritte nella documentazione relativa al prodotto stesso. La responsabilità di CAREL in relazione al proprio prodotto è regolata dalle condizioni generali di contratto CAREL editate nel sito www.carel.com e/o da specifici accordi con i clienti.

SOLDERING & MECHANICAL WORKS
READ CAREFULLY IN THE TEXT!

Attenzione: separare quanto più possibile i cavi delle sonde e degli ingressi digitali dai cavi dei carichi induttivi e di potenza per evitare possibili disturbi elettromagnetici. Non inserire mai nelle stesse canaline (comprese quelle dei quadri elettrici) cavi di potenza e cavi di segnale.

(ENG) Description

PJEZ* and PQEZ* (models S, C, M, Y, X) represent a range of electronic controllers with LED display developed for the management of refrigerating units, display cabinets and showcases. PJEZ* controllers are provided with standard relays. PQEZ* controllers are specifically designed for use in applications with flammable refrigerants.

Models available:

- P(J,Q)EZS*, designed for the management of static refrigerating units, no fan on the evaporator, operating at temperatures above 0°C;
- P(J,Q)EZC*, designed for the management of low temperature ventilated refrigerating units.
- P(J,Q)EZ(Y, X)*, designed for the management of static refrigerating units, no fan, operating at low temperatures;
- P(J,Q)EZM*, simple solution for measuring the temperature.

Note: model Y= relays connected electronically internally; model X= independent relays.

Technical specifications

power supply (*)	230 Vac +10 /-15% 50/60 Hz; 115 Vac +10 /-15% 50/60 Hz 12 Vac +10/-15% 50/60 Hz class 2; 12 Vdc +10/-20% class 2;
rated power	3,5 VA
inputs (*)	NTC or PTC probes 1 or 3 inputs. Digital input as alternative to third probe
relay outputs (*)	

	PJEZ	PQEZ
2 HP relay	UL: 12 A Res. 12 FLA 72 LRA - 240 Vac (***). UL: 12 A Res. 10 FLA 60 LRA - 240 Vac. (****) EN60730-1: 10(10) A 250 Vac (**)	UL60730: 12 A Res. 8 FLA 48 LRA - 240 Vac, EN60730: 10(6) A 250 Vac
16 A relay	UL: 12 A Res. 5 FLA 30 LRA - 240 Vac C300, EN60730-1: 12(2) A NO/NC, 10(4) A up to 60 °C NO, 2(2) A CO - 250 Vac.	UL60730: 12 A Res. 5 FLA 30 LRA - 240 Vac C300, EN60730: 12(2) A NO 100k cycles, 12(2)A NC 30k cycles, 2(2) A CO 30k cycles - 250 Vac.
8 A relay	UL: 8 A Res. 2 FLA 12 LRA - 240 Vac C300, EN60730-1: 8(4) A NO, 6(4) A NC, 2(2) A CO - 250 Vac.	UL60730: 8 A Res. 2 FLA 12 LRA - 240 Vac C300, EN60730-1: 8(3) A NO, 6(3) A NC, 2(2) A CO - 250 Vac.
type of probe (*)	Std CAREL NTC 10 KΩ at 25 °C, Std CAREL PTC 985 Ω at 25 °C	
connections (*)	screw terminals for cables with cross-sect. from 0.5 mm² to 1.5 mm². Plug-in terminals for screw blocks or with crimped contact (cable cross-sect. up to 2.5 mm²). Rated maximum current per terminal 12 A.	
assembly (*)	terminal: using screws from the front panel or with rear brackets. Interface: wall mounting, 4 screws, spacing 101x151 mm	
display	3 digit LED display with sign (-199 to 999) and decimal point; six status LEDs	
operating conditions	-10T50 °C - humidity <90% rH non-condensing	
storage conditions	-20T70 °C - humidity <90% rH non-condensing	
range of measurement	-50T90 °C (-58T194 °F) - resolution 0.1 °C/°F	
front panel index of protection	panel installation with IP65 type 1 gasket	
case	plastic terminal, 81x36x65 mm	
classification according to protection against electric shock	Class II when suitably integrated	
environmental pollution	normal	
PTI of the insulating material	250 V	
period of stress across the insulating parts	long	
category of resistance to heat and fire	category D (UL94 - V0)	
immunity against voltage surges	category 1	
type of action and disconnection	1C relay contacts	
no. of relay automatic operating cycles (*)	EN60730: 100,000 operations UL: 30,000 operations (250 Vac)	
software class and structure	Class A	
cleaning the instrument	Only use neutral detergents and water.	
cable max. lenght	serial: 1 km - probes: 30 m - relay: 10 m	

WARNING:
do not run the power cable less than 3 cm from the bottom part of the device or from the probes; **for the connections only use copper wires**.
(*) The features indicated differ according to the model.
(**) 1 OFF minimum time between two starts of the motor must be greater than 60 s.
(***) only for PJEZ(M,S,X)*
(****) only for PJEZ(C, Y)*

IMPORTANT WARNINGS

The CAREL product is a state-of-the-art device, whose operation is specified in the technical documentation supplied with the product or can be downloaded, even prior to purchase, from the website www.carel.com. The customer (manufacturer, developer or installer of the final equipment) accepts all liability and risk relating to the configuration of the product in order to reach the expected results in relation to the specific final installation and/or equipment. The failure to complete such phase, which is required/indicated in the user manual, may cause the final product to malfunction; CAREL accepts no liability in such cases. The customer must use the product only in the manner described in the documentation relating to the product. The liability of CAREL in relation to its products is specified in the CAREL general contract conditions, available on the website www.carel.com and/or by specific agreements with customers.

SOLDERING & MECHANICAL WORKS
READ CAREFULLY IN THE TEXT!

WARNING: separate as much as possible the probe and digital input signal cables from the cables carrying inductive loads and power cables to avoid possible electromagnetic disturbance. Never run power cables (including the electrical panel wiring) and signal cables in the same conduits.

Tabella parametri

	Parametro	F	Min.	Max.	Def.	U.M.	M[1]
PS	PASSWORD	F	0	200	22	-	Ⓟ
/	PARAMETRI SONDA						
/2	Stabilità misura	C	1	15	4	-	Ⓟ
/4	Selezione sonda/ingresso visualizzata/o (*)	F	1	3	1	-	Ⓟ
/5	Selezione °C / °F (0 = °C; 1 = °F)	C	0	1	0	-	Ⓟ
/6	Disabilitazione punto decimale	C	0	1	0	-	Ⓟ
/7	Abilitazione allarme sonda 2(solo P(J,Q)EZM)	C	0	1	0	-	Ⓟ
/C1	Calibrazione sonda	F	-50,0	50,0	0,0	°C/°F	Ⓟ
/C2	Calibrazione sonda 2 (*)	F	-50,0	50,0	0,0	°C/°F	Ⓟ
/C3	Calibrazione sonda 3 (*)	F	-50,0	50,0	0,0	°C/°F	Ⓟ
r	PARAMETRI REGOLATORE						
St	Temperatura di regolazione	F	r1	r2	4,0	°C/°F	Ⓟ
r1	SET minimo consentito all'utente	C	-50,0	r2	-50,0	°C/°F	Ⓟ
r2	SET massimo consentito all'utente	C	r1	200,0	90,0	°C/°F	Ⓟ
r3	Modalità di funzionamento 0= direct+defrost; 1= direct; 2= reverse	C	0	2	0	-	-
r4	Variazione automatica set point notturno (*)	C	-50,0	50,0	3,0	°C/°F	Ⓟ
rd	Differenziale di regolazione (isteresi)	F	0,0	19,0	2,0	°C/°F	Ⓟ
c	PARAMETRI COMPRESSORE						
c0	Rit. partenza comp. e ventola dopo accensione	C	0	100	0	min	-
c1	Tempo min. tra accensioni successive comp.	C	0	100	0	min	-
c2	Tempo min. di spegnimento del compres.	C	0	100	0	min	-
c3	Tempo min. di funzionamento del compres.	C	0	100	0	min	-
c4	Sicurezza compressore (duty setting)	C	0	100	0	min	-
cc	Durata ciclo continuo	C	0	15	4	h	-
c6	Tempo esclusione allarme dopo ciclo cont.	C	0	15	2	h	-
d	PARAMETRI SBRINAMENTO						
d0	Tipo di sbrinamento (0= resistenza; 1= gas caldo; 2= resist. a tempo; 3= gas caldo a tempo pos; 4= resist. termostatato a tempo)	C	0	4	0	-	-
dI	Intervallo tra due sbrinamenti	F	0	199	8	h/min	-
dt	Temperatura di fine sbrinamento (*)	F	-50,0	130,0	4,0	°C/°F	-
dP	Durata max. o durata effettiva sbrinamento	F	1	199	30	min/s	-
d4	Sbrin. all'accensione dello strum. (1=attivato)	C	0	1	0	-	-
d5	Ritardo sbrinam. all'accensione o da ing. dig.	C	0	199	0	min	-
d6	Blocco visualizzazione temperatura durante lo sbrinamento (1= bloccata visualizzazione)	C	0	1	1	-	-
dd	Tempo di gocciolamento dopo lo sbrinam.	F	0	15	2	min	-
dB	Tempo di esclusione allarmi dopo lo sbrinam.	F	0	15	1	h	-
d9	Priorità sbrinam. sulle protezioni compres. (0= tempi protezione rispettati; 1= tempi protezione non rispettati)	C	0	1	0	-	-
d/	Visualiz. temp. sonda di sbrinamento (*)	F	-	-	-	-	-
dc	Base dei tempi (solo per lo sbrinamento; 0= h/min ; 1= min/s)	C	0	1	0	-	-
A	PARAMETRI DI ALLARME						
A0	Differenziale allarmi e ventole	C	-20,0	20,0	2,0	°C/°F	Ⓟ
AL	Soglia/Scostamento allarme di bassa temperatura (AL= 0; allarme escluso)	F	-50,0	250,0	0	°C/°F	Ⓟ
AH	Soglia/Scostamento allarme di alta temperatura (AH= 0; allarme escluso)	F	-50,0	250,0	0	°C/°F	Ⓟ
Ad	Ritardo allarme bassa e alta temperatura	C	0	199	0	min	Ⓟ
A4	Configurazione ingresso digitale (*) 0= ingresso non attivo; 1= allarme esterno istant. o ritardato (A7); 2= abilitazione defrost (aperto=disabilit.); 3= inizio defrost su fronte di chiusura; 4= switch tenda o funz. notturno (aperto= set normale); 5= ON/OFF remoto (aperto= OFF); 6= comando uscita AUX [H1=3] (aperto = AUX diseccc.); 7= comando uscita AUX [H1=3] + FAN OFF (chiuso) (aperto = AUX eccitato); 8= comando uscita AUX [H1=3] + FAN-OFF (chiuso) + COMP-OFF (chiuso); (aperto= AUX eccitato); 9= selezione funzionam. direct/reverse: r3=0 => aperto= direct + defrost; chiuso= reverse r3=1/2 => aperto= direct; chiuso= reverse 10= sonda condensatore; 11= sonda prodotto	C	0	11	0	-	Ⓟ
A7	Ritardo rilevazione allarme esterno (*)	C	0	199	0	min	Ⓟ
A8	Abilitazione allarme "Ed": fine sbrinamento per timeout (1= abilitato) (*)	C	0	1	0	-	-
Ac	Allarme alta temperatura condensatore (*)	C	-50,0	250,0	70,0	°C/°F	Ⓟ
AE	Differenziale allarme alta temp. condens. (*)	C	0,1	20,0	5,0	°C/°F	Ⓟ
Acd	Ritardo allarme alta temp. condensatore (*)	C	0	250	0	min	Ⓟ
F	PARAMETRI VENTOLE (**)						
F0	Gestione ventole 0= ventole acceso escluso fasi specifiche; 1= ventole attivate in funzione del parametro F1 escluso fasi specifiche (**)	C	0	1	0	-	-
F1	Temperatura spegnimento ventole (**)	F	-50,0	130,0	5,0	°C/°F	-
F2	Ventole ferme con compressore fermo (**)	C	0	1	1	-	-
F3	Stato ventole durante sbrinamento (**) 0= ventole acese; 1= ventole ferme	C	0	1	1	-	-
Fd	Fermo post gocciolamento. Attivo per ogni val. di F0 (**)	F	0	15	1	min	-
H	ALTRE PREDISPOSIZIONI						
H0	Indirizzo seriale	C	0	207	1	-	Ⓟ
H1	Configurazione uscita AUX 0= nessuna funzione associata all'uscita 1= uscita allarme: norm. eccitato 2= uscita allarme: norm. diseccitato 3= uscita aux legata a ID [A4=6/7/8] ID aperto= aux eccitato ID.chiuso= aux eccitato	C	0	3	0	-	Ⓟ
H2	Abilitazione tastiera 0= tastiera disabilitata 1= tastiera abilitata 2= tastiera abilitata tranne ON/OFF	C	0	2	1	-	Ⓟ
H4	Disabilitazione buzzer 0= buzzer abilitato (ON); 1= buzzer disabilitato (OFF)	C	0	1	0	-	Ⓟ
H5	Codice identificativo chiave da supervisore	F	0	199	1	-	Ⓟ
EZY	Selezione del banco Easy Set a seconda del modello, vedi manuale. (vedi nota)	C	0	4	0	-	-
	PARAMETRI RTC						
tEn	Abilitazione RTC (***)	C	0	1	1	-	-
d1d	Fascia oraria sbrinamento 1 giorno (***)	C	0	11	0	giorni	-
d1h	Fascia oraria sbrinamento 1 ora (***)	C	0	23	0	h	-
d1m	Fascia oraria sbrinamento 1 minuto (***)	C	0	59	0	min	-
d2d	Fascia oraria sbrinamento 2 giorni (***)	C	0	11	0	giorni	-
d2h	Fascia oraria sbrinamento 2 ore (***)	C	0	23	0	h	-
d2m	Fascia oraria sbrinamento 2 minuti (***)	C	0	59	0	min	-
d3d	Fascia oraria sbrinamento 3 giorni (***)	C	0	11	0	giorni	-
d3h	Fascia oraria sbrinamento 3 ore (***)	C	0	23	0	h	-
d3h	Fascia oraria sbrinamento 3 minuti (***)	C	0	59	0	min	-
d4d	Fascia oraria sbrinamento 4 giorni (***)	C	0	11	0	giorni	-
d4h	Fascia oraria sbrinamento 4 ore (***)	C	0	23	0	h	-
d4m	Fascia oraria sbrinamento 4 minute (***)	C	0	59	0	min	-
nOd	Fascia oraria "night on" giorno (***)	C	0	11	0	giorni	-
nOh	Fascia oraria "night on" ora (***)	C	0	23	0	h	-
nOm	Fascia oraria "night on" minuti (***)	C	0	59	0	min	-
nFd	Fascia oraria "night off" giorno (***)	C	0	11	0	giorni	-
nFh	Fascia oraria "night off" minuti (***)	C	0	23	0	h	-
nFm	Fascia oraria "night off" minuti (***)	C	0	59	0	min	-
AOd	Fascia oraria "aux on" giorno (***)	C	0	11	0	giorni	-
AOh	Fascia oraria "aux on" ora (***)	C	0	23	0	h	-
AOm	Fascia oraria "aux on" minuti (***)	C	0	59	0	min	-
AFd	Fascia oraria "aux off" giorno (***)	C	0	11	0	giorni	-
AFh	Fascia oraria "aux off" ora (***)	C	0	23	0	h	-
AFm	Fascia oraria "aux off" minuti (***)	C	0	59	0	min	-
dAY	RTC giorno della settimana (***)	C	1	7	1	giorni	-
hr	RTC ora (***)	C	0	23	0	h	-
Min	RTC minuto (***)	C	0	59	0	min	-

[1] presenza parametro del mod. P(J,Q)EZM*: si= Ⓟ; no= -
(*) parametri non presenti nei modelli con una sonda.
(**) parametri non presenti nei modelli P(J,Q)EZS, P(J,Q)EZX e P(J,Q)EZY
(***) parametri non presenti nei modelli privi di RTC

nota: tramite il parametro "Easy Set" è possibile selezionare uno dei 4 set di configurazione rapida memorizzati nello strumento, contenenti al massimo 25 parametri ciascuno.

P(J,Q)EZ(S, X)* EZY=1: temperatura normale no defrost
EZY=2: temperatura normale con defrost a tempo
EZY=3: temperatura normale uscita in heating
EZY=4: temperatura normale defrost termostatato (d0=4)

P(J,Q)EZ(C, Y)* EZY=1: basso temperatura con defrost a gas caldo
EZY=2: bassa temperatura variazione automatica set notturno da ingresso digitale
EZY=3: bassa temperatura con gestione allarme ingresso digitale
EZY=4: bassa temperatura sbrinamento termostatato (d0=4).

Table of parameters

	Parameter	F	Min.	Max.	Def.	UOM	M[1]
PS	PASSWORD	F	0	200	22	-	Ⓟ
/	PROBE PARAMETERS						
/2	Measurement stability	C	1	15	4	-	Ⓟ
/4	Select probe/input displayed (*)	F	1	3	1	-	Ⓟ
/5	Select °C / °F (0 = °C; 1 = °F)	C	0	1	0	-	Ⓟ
/6	Disable decimal point	C	0	1	0	-	Ⓟ
/7	Enable probe 2 alarm (P(J,Q)EZM only)	C	0	1	0	-	Ⓟ
/C1	Probe calibration	F	-50,0	50,0	0,0	°C/°F	Ⓟ
/C2	Probe 2 calibration (*)	F	-50,0	50,0	0,0	°C/°F	Ⓟ
/C3	Probe 3 calibration	F	-50,0	50,0	0,0	°C/°F	Ⓟ
r	CONTROL PARAMETERS						
St	Control temperature	F	r1	r2	4,0	°C/°F	Ⓟ
r1	Minimum set point allowed to the user	C	-50,0	r2	-50,0	°C/°F	Ⓟ
r2	Maximum set point allowed to the user	C	r1	200,0	90,0	°C/°F	Ⓟ
r3	Operating mode 0= direct+defrost; 1= direct; 2= reverse	C	0	2	0	-	-
r4	Automatic night-time set point variation	C	-50,0	50,0	3,0	°C/°F	Ⓟ
rd	Control differential (hysteresis)	F	0,0	19,0	2,0	°C/°F	Ⓟ
c	COMPRESSOR PARAMETERS						
c0	Comp. and fan start delay after start-up	C	0	100	0	min	-
c1	Min. time between successive comp. starts	C	0	100	0	min	-
c2	Min. compressor off time	C	0	100	0	min	-
c3	Min. compressor on time	C	0	100	0	min	-
c4	Compressor safety (duty setting)	C	0	100	0	min	-
cc	Continuous cycle duration	C	0	15	4	h	-
c6	Alarm bypass time after cont. cycle	C	0	15	2	h	-
d	DEFROST PARAMETERS						
d0	Type of defrost (0= heater; 1= hot gas; 2= heater by time; 3= hot gas by time; 4= heater by time with temp. cont.)	C	0	4	0	-	-
dI	Interval between two defrosts	F	0	199	8	h/min	-
dt	End defrost temperature	F	50,0	130,0	4,0	°C/°F	-
dP	Max. or effective defrost duration	F	1	199	30	min/s	-
d4	Defrost when the instrument is switched on (1= activated)	C	0	1	0	-	-
d5	Defrost delay on start-up or from digital input	C	0	199	0	min	-
d6	Disable temperature display during defrost (1= display disabled)	C	0	1	1	-	-
dd	Dripping time after defrost	F	0	15	2	min	-
dB	Alarm bypass time after defrost	F	0	15	1	h	-
d9	Defrost priority over comp. protectors (0= protection time respected; 1= protection time not respected)	C	0	1	0	-	-
d/	Display defrost probe temp.	F	-	-	-	-	-
dc	Time base (for defrost only; 0= h/min; 1= min/s)	C	0	1	0	-	-
A	ALARM PARAMETERS						
A0	Alarm and fan differential	C	-20.0	20.0	2.0	°C/°F	Ⓟ
AL	Low temperature alarm threshold/deviation (AL= 0; alarm disabled)	F	-50.0	250.0	0	°C/°F	Ⓟ
AH	High temperature alarm threshold/deviation (AH= 0; alarm disabled)	F	50.0	250.0	0	°C/°F	Ⓟ
Ad	Low and high temperature alarm delay	C	0	199	0	min	Ⓟ
A4	Digital input configuration 0= input not active; 1= exter. alarm, instant (A7= 0) or delayed (A7>0); 2= enable defrost (open=disabled); 3= start defrost on closing; 4= curtain switch or night-time operation (open= normal setpoint); 5= remote ON/OFF (open= OFF); 6= AUX output control [H1=3] (open = AUX de-energ.); 7= AUX output [H1=3] + FAN-OFF control (closed) (open = AUX energised); 8= AUX output [H1=3] + FAN-OFF (closed) + COMP-OFF control (closed); (open= AUX energised); 9= select direct/reverse operation: r3=0 => open= direct + defrost; closed= reverse r3=1/2 => open= direct; closed= reverse 10= condenser probe; 11= product probe	C	0	11	0	-	Ⓟ
A7	External alarm detection delay	C	0	199	0	min	Ⓟ
A8	Enable alarm "Ed": end defrost by timeout (1= enabled)	C	0	1	0	-	-
Ac	High condenser temperature alarm	C	-50.0	250.0	70.0	°C/°F	Ⓟ
AE	High condenser temperature alarm differential	C	0.1	20.0	5.0	°C/°F	Ⓟ
Acd	High condenser temperature alarm delay	C	0	250	0	min	Ⓟ
F	FAN PARAMETERS (**)						
F0	Fan management: 0= fans on excluding specific phases; 1= fans on according to parameter F1 excluding specific phases (**)	C	0	1	0	-	-
F1	Fans shutdown temperature (**)	F	50.0	130.0	5.0	°C/°F	-
F2	Fans off when compressor off (**)	C	0	1	1	-	-
F3	Fans status during defrost (**) 0= fan ON; 1= fan OFF	C	0	1	1	-	-
Fd	Off for post-dripping. Active for each val. of F0 (**)	F	0	15	1	min	-
H	OTHER SETTINGS						
H0	Serial address	C	0	207	1	-	Ⓟ
H1	AUX output configuration 0= no function associated with the output 1= alarm output usually energised 2= alarm output usually de-energised 3= auxiliary output driven by dig. input [A4=6/7/8] dig. input OPEN= AUX de-energised dig. input CLOSED= AUX energised	C	0	3	0	-	Ⓟ
H2	Enable keypad 0= keypad disabled 1= keypad enabled 2= keypad enabled except for ON/OFF function	C	0	2	1	-	Ⓟ
H4	Disable buzzer 0= buzzer enabled 1= buzzer disabled	C	0	1	0	-	Ⓟ
H5	Key ID code from supervisor	F		199	1	-	Ⓟ
EZY	Select Easy Set according to the model, see manual (see notes)	C	0	4	0	-	-
	RTC PARAMETERS						
tEn	Disable RTC	C	0	1	1	-	-
d1d	Defrost time band 1 day	C	0	11	0	days	-
d1h	Defrost time band 1 hours	C	0	23

B2: CAREL OPERATING INSTRUCTIONS

ITA Visualizzazione e funzioni

Durante il normale funzionamento il controllo visualizza a display il valore della sonda impostata con il parametro /4 (=1 sonda ambiente di default, =2 seconda sonda, 3= terza sonda). Inoltre sul display appaiono i LED che indicano l'attivazione delle funzioni del controllo (vedi Tab. 1), mentre i 3 tasti permettono di attivare/disattivare alcune funzioni (vedi Tab. 2).

LED e funzioni associate

icona	funzione	normale funzionamento			start up
		ON	OFF	blink	
	compressore	acceso	spento	richiesto	ON
	ventola	acceso	spento	richiesto	ON
	defrost	acceso	spento	richiesto	ON
AUX	aux	uscita accesa	uscita spenta	-	ON
	allarme	tutti	nessun allarme	-	ON
	orologio	RTC presente e abilitato, ed è stata impostata almeno 1 fascia oraria	RTC assente o disabilitato, o non è stata impostata nemmeno 1 fascia oraria	-	ON se RTC presente

Tab. 1

Tabella attivazione funzioni tramite i tasti - mod. S, X, Y, C

tasto	normale funzionamento		start up	
	pressione del singolo tasto	pressione conbinata		
	più di 3 s: alterna stati ON/OFF	Premuti insieme attivano/disattivano ciclo continuo	-	
	più di 3 s: attiva/disattiva defrost		Premuti insieme attivano procedura RESET parametri.	per 1 s visualizza cod. vers. firmware
set	- 1 s.: visualizza/permette di impostare set point - più di 3 s: accesso menù impostazione parametri (inserire password '22') - Tacita allarme acustico (buzzer)	-		per 1 s RESET banco EZY corrente

Tab. 2

Tabella funzioni tasti - variante mod. M

tasto	funzione funzionamento	start up	
	selezione rapida sonda visualizzata	Premuto insieme a "set" attiva procedura RESET parametri.	per 1 s visualizza cod. vers. firmware

Tab. 3

Impostazioni del set point (valore di temperatura desiderato)

- premere per 1 s SET, dopo alcuni istanti il valore impostato lampeggia;
- aumentare o diminuire tale valore con UP o DOWN;
- premere SET per confermare il nuovo valore.

ON/OFF dello strumento

Premere per più di 3 s UP. In questa condizione gli algoritmi di regolazione e defrost sono disabilitati e lo strumento alterna la visualizzazione a display del messaggio "OFF" a quella della temperatura della sonda impostata.

Sbrinamento manuale (solo per mod. S, X, Y e C)

Premere per più di 3 s DOWN (si attiva solo se sussistono le condizioni di temperatura).

Ciclo continuo (solo per mod. S, X, Y e C)

Premere contemporaneamente per più di 3 s UP e DOWN.

Selezione rapida sonda visualizzata (solo per mod. M)

Premere rapidamente DOWN per selezionare la sonda da visualizzare temporaneamente.

Accesso e modifica parametri tipo F (frequenti) e tipo C (configurazione)

1. premere SET per 3 s (sul display comparirà "PS");
2. • per accedere al menù parametri di tipo F e C digitare la password "22" con UP/DOWN;
   • per accedere solo al menù parametri F premere SET (senza digitare la password);
3. navigare all'interno del menù parametri con UP/DOWN;
4. • per visualizzare/modificare i valori del parametro visualizzato premere SET, quindi UP/DOWN ed infine SET per confermare la modifica (si ritorna così al menù dei parametri).

Per salvare definitivamente tutti i valori modificati ed uscire dal menù parametri premere SET per 3 s;
Per uscire dal menù senza salvare i valori modificati (uscita per time out) non premere alcun tasto per almeno 60 s.

Normative di sicurezza

conforme alle Normative europee in materia. Precauzioni d'installazione:
- i cavi di collegamento devono garantire l'isolamento fino a 90 °C;
- per le versioni 12 Vac utilizzare trasformatori Classe II. Per il rispetto delle normative EN 61000-4-4, EN 61000-4-5, EN 61000-4-11, EN 61000-4-6, EN 60730-1, il trasformatore deve essere uno dei modelli indicati (vedi Listino Prezzi CAREL). Per le versioni 12 Vac/dc, non essendo possibile garantire il doppio isolamento tra i connettori di alimentazione e le uscite relè, si raccomanda di utilizzare carichi alimentati solamente in bassissima tensione di sicurezza (fino a 42 V nominali di valore efficace);
- prevedere almeno 10 mm di distanza tra il contenitore e parti conduttive vicine;
- collegamenti degli ingressi digitali e analogici inferiori a 30 m di distanza; adottare le adeguate misure di separazione dei cavi per il rispetto delle normative suddette.

Bloccare bene i cavi di connessione delle uscite per evitare contatti con parti in bassissima tensione di sicurezza.

Certificazioni solo per PQEZ

Applicazioni con gas refrigeranti infiammabili: IEC/EN/UL 60335-2-24 (clauses 22.109, 22.110) - IEC/EN/UL 60335-2-40 (clauses 22.116, 22.117) - IEC/EN/UL 60335-2-89 (clauses 22.107, 22.108, 22.109) for R50, R290, R600, R600a, R-1234ze gases. IEC/EN/UL 60079-15 (clausule 17 e 19, applicabili ai relè in base alla loro tipologia. L'accettabilità deve essere sempre verificata e valutata nella applicazione finale).

ENG Display and functions

During normal operation, the controller displays the value of the probe set using parameter /4 (=1 ambient probe, default, =2 second probe, 3= third probe). In addition, the display has LEDs that indicate the activation of the control functions (see Table 1), while the 3 buttons can be used to activate/deactivate some of the functions (see Table 2).

LEDs and associated functions

icon	function	normal operation			start up
		ON	OFF	blink	
	compressor	on	off	request	ON
	fan	on	off	request	ON
	defrost	on	off	request	ON
AUX	aux	output on	output off	-	ON
	alarm	all	no alarm	-	ON
	clock	RTC fitted and enabled, at least 1 time band set	RTC not fitted or disabled, not even 1 time band set	-	ON if RTC fitted

Tab. 1

Table of functions activated by the buttons - models S, X, Y, C

button		normal operation			start up	
		pressing the button alone	pressed together			
	up ON/OFF	more than 3 s: toggle ON/OFF	Pressed together start/stop continuous cycle	-		
	down defrost	more than 3 s: start/stop defrost		Pressed together start parameter reset procedure	for 1 s display firmware vers. code	
set	set mute	- 1 s.: display/set the set point - more than 3 s: access parameter setting menu (enter password '22') - mute audible alarm (buzzer)	-		for 1 s RESET current EZY set	

Tab. 2

Table of button functions - variant model M

button		start up	
	rapid selection of probe displayed	Pressed together "set" start parameter reset procedure	for 1 s display firmware vers. code

Tab. 3

Setting the set point (desired temperature)

- press SET for 1 s, the set value will start flashing after a few moments;
- increase or decrease the value using UP or DOWN;
- press SET to confirm the new value.

Switching the device ON/OFF

Press UP for more than 3 s. The control and defrost algorithms are now disabled and the instrument displays the message "OFF" alternating with the temperature read by the set probe.

Manual defrost (models S, X, Y and C only)

Press for DOWN more than 3 s (the defrost starts only the temperature conditions are valid).

Continuous cycle (models S, X, Y and C only)

Press UP and DOWN together for more than 3 s.

Rapid selection of probe displayed (model M only)

Press DOWN briefly to select the probe to be temporarily displayed.

Access and setting type F (frequent) and type C (configuration) parameters

1. press SET for 3 s (the display will show "PS");
2. • to access the type F and C parameter menu, enter the password "22" using UP/DOWN;
   • to access the F parameter menu only, press SET (without entering the password);
   • scroll inside the parameter menu using UP/DOWN;
4. • to display/set the values of the parameter displayed, press SET, then UP/DOWN and finally SET to confirm the changes (returning to the parameter menu).

To save all the new values and exit the parameter menu, press SET for 3 s;
To exit the menu without saving the changed values (exit by timeout) do not press any button for at least 60 s.

Safety standards

compliant with the relevant European standards. Installation precautions:
- the connection cables must guarantee insulation up to 90 °C;
- for 12 Vac versions use Class II transformers. To ensure compliance with the immunity standards (surge), the transformer must be one of the models specified (see the CAREL price list). For the 12 Vac/dc versions, as double insulation cannot be guaranteed between the power supply and the relay outputs, only use safety low voltage loads (up to 42 V effective rated value);
- ensure a space of at least 10 mm between the case and the nearby conductive parts;
- digital and analogue input connections less than 30 m away; adopt suitable measures for separating the cables so as to ensure compliance with the immunity standards;

Secure the connection cables of the outputs so as to avoid contact with very low voltage parts.

Certifications for PQEZ only

Applications with flammable refrigerant gases:
IEC/EN/UL 60335-2-24 (clauses 22.109, 22.110) - IEC/EN/UL 60335-2-40 (clauses 22.116, 22.117) - IEC/EN/UL 60335-2-89 (clauses 22.107, 22.108, 22.109) for R50, R290, R600, R600a, R-1234ze gases. IEC/EN/UL 60079-15 (clauses 17 and 19, applied to the relays according to their type. Acceptability should be always verified and judged in the final application).

FRE Description:

PIEZ* et PQEZ* (modèles S, C, M, Y, X) constitue une gamme entière de régulateurs électronique à microprocesseurs avec affichage LED realisée pour la gestion d' unité frigorifique, vitrines et présentoir frigorifique. Les contrôleurs PIEZ * sont fournis avec des relais standard. Les contrôleurs PQEZ * sont spécialement conçus pour une utilisation dans des applications avec des réfrigérants inflammables. Modèles disponibles:
- P(1,Q)EZS*, indiqués pour la gestion d'unités frigorifiques statiques, sans ventilateur sur l'évaporateur, fonctionnant à des températures supérieures à 0°C;
- P(1,Q)EZC*, indiqués pour la gestion d'unités frigorifiques ventilées à basse température.
- P(1,Q)EZ(Y, X)*, indiqués pour la gestion d'unités frigorifiques statiques, sans ventilateur, fonctionnant à basse température;
- P(1,Q)EZM*, solution pour mesurer simplement la température

Note: mod. Y= relais reliée électroniquement à l' intérieur entre eux; mod. X= relais indépendants.

Affichage et fonctions: Pendant le fonctionnement normal le contrôle affiche sur l' écran la valeur de la sonde réglée au paramètre/4 (=1sonde ,ambiant par défaut, =2 deuxième sonde, 3= troisième sonde). De plus sur l' écran apparaissent les LED qui indiquent l' activation des fonctions de contrôleo (voir Tab. 1), alors que les trois touches permettent d' activer/désactiver certaines fonctions (voir Tab. 2).

LED et fonctions associées

icone	fonction	fonctionnement normale			start up
		ON	OFF	blink	
	compresseur	accès	éteint	requis	ON
	ventilateur	accès	éteint	requis	ON
	defrost	accès	éteint	requis	ON
AUX	aux	sortie accès	sortie éteinte	-	ON
	alarme	tous	aucune alarme	-	ON
	horloge	RTC présent et activé, et une tranche horaire au moins a été réglée	RTC absent ou désactivé, ou une tranche horaire au moins n'a pas été réglée	-	ON si RTC présent

Tab. 1

Tableau activation fonctions à l'aide des touches - mod. S, X, Y, C

touche		fonctionnement normale		start up	
		simple pression de la touche	pression combinée		
	up ON/OFF	plus de 3 s: alterne phases ON/OFF	Appuyées ensemble activent/désactivent cycle continu	-	
	down defrost	plus de 3 s: active/désactive defrost		Appuyées ensemble activent procédure REINITIALISATION param.	pendant 1 s affiche cod. vers. firmware
set	set mute	- 1 s.: affiche/ permet de régler set point - plus de 3 s: accès au menu réglages paramètres (entrer mot de passe '22') - Eteint l' alarme accoustique (buzzer)	-		pour 1 s RESET banc EZY courant

Tab. 2

Tableau fonctions touches - variante mod. M

touche	fonctionnement normale	start up	
	sélection rapide sonde affichée	Enfoncée en même temps que "set" active la procédure RESET paramètres.	pendant 1 s affiche cod. vers. firmware

Réglages du set point (valeur de la température désirée)

- appuyer pendant 1 s sur SET, quelques instants après la valeur réglée clignote;
- augmenter ou diminuer cette valeur au moyen de UP ou DOWN;
- appuyer sur SET pour confirmer la nouvelle valeur.

ON/OFF de l'instrument

Appuyer pendant plus de 3s sur UP. Dans cette situation les algorithmes de régulation et defrost sont désactivés et l'instrument alterne l' affichage sur l' écran du message "OFF" et l' affichage de la temperature pré-réglée de la sonde.

Dégivrage manuel (seulement pour mod. S, X, Y e C)

Appuyer pendant plus de 3 s sur DOWN (il s'active seulement si subsistent les conditions de température).

Cycle continu (seulement pour mod. S, X, Y e C)

Appuyer en meme temps pendant plus de 3 s sur UP et DOWN.

Sélection rapide sonde affichée (seulement pour mod. M)

Appuyer rapidement DOWN pour sélectionner la sonde à afficher temporairement.

Accès et modification paramètres type F (fréquents) et type C (configuration)

1. Appuyer sur SET pendant 3 s (sur l' écran apparaîtra "PS");
2. • pour accéder au menu paramètres de type F et C entrer le mot de passe "22" en utilisant UP/DOWN;
   • pour accéder seulement au menu paramètres F appuyer sur SET (sans devoir entrer le mot de passe);
3. naviguer à l' antérieur du menu paramètresen utilisant UP/DOWN;
4. • pour afficher/modifier les valeurs du parametre affiché appuyer sur SET, ensuite sur UP/DOWN et enfin sur SET pour cconfirmer la modification (on retourne ainsi au menu des parametres).

Pour sauver définitivamente toutes les valeurs modifiées et sortir du menu paramètres appuyer sur SET pendant 3 s;
Pour sortir du menu sans suaver les valeurs modifiées (sortie timeout) n' appuyer sur aucun bouton pendant au moins 60s.

Normes de sécurité

conformes aux Normes européennes pertinentes. Precautions d' usage:
- les câbles de connexion doivent garantir l' isolation jusqu' à 90 °C;
- pour les versions12 utiliser transformateurs Classell. Pour respecter les normes de sûreté (surge), le transformateur doit etre un des modèles indiqués (voir catalogue CAREL). Pour les versions 12Vac/dc, une double isolation ne peut être garantie entre l'alimentation et les relais de sortie, utiliser uniquement avec des charges basse tension (jusqu'à 42 V nominal efficace);
- laisser au moins 10 mm de distance entre le boîtier et les parties conductibles voisines;
- Connexions des entrées digitales analogiques inférieures à une distance de 30m; adopter les mesures de séparation appropriées des câbles pour le respect des normes de sûreté.

Bloquer avec soin les câbles de connexion des sorties pour éviter les contacts avec les éléments sous Très Basse tension de sécurité.

Certifications pour PQEZ uniquement

Applications avec des gaz refrigerants inflammables: CEI / EN / UL 60335-2-24 (clauses 22.109, 22.110) - CEI / EN / UL 60335-2-40 (clauses 22.116, 22.117) - CEI / EN / UL 60335-2-89 (clauses 22.107, 22.108, 22.109) pour les gaz R50, R290, R600, R600a, R-1234ze. CEI / EN / UL 60079-15 (articles 17 et 19, appliqués aux relais en fonction de leur type. L'acceptabilité doit toujours être vérifiée et jugée dans l'application finale).

GER Beschreibung:

PIEZ* und PQEZ* (Modelle S, C, M, Y, X) umfasst einer Bandbreite elektronischer Mikroprozessorsteuerungen mit LED-Anzeige für die Ansteuerung von Kältegeräten, Kühlvitrinen und Kühlmöbeln. PIEZ * -Regler sind mit Standardrelais ausgestattet. PQEZ * -Regler wurden speziell für Anwendungen mit brennbaren Kältemitteln entwickelt. Verfügbare Modelle:
- Die Mod. P(1,Q)EZS* steuern Kältegeräte mit statischem Verdichter ohne Verdampferventilator bei Betriebstemperat. über 0°C an;
- Die Modelle P(1,Q)EZC* steuern Kältegeräte mit Luftkühler im Tiefkühlbereich an;
- Die Modelle P(1,Q)EZ(Y, X)* steuern Kältegeräte mit statischem Verdichter ohne Verdampferventilator im Tiefkühlbereich an;
- Die Modelle P(1,Q)EZM* sind die Lösung für eine einfache Temperaturmessung

N.B.: Mod. Y= elektronisch zusammengeschaltete Relais; Mod. X= unabhängige Relais.

Anzeige und Funktionen

Bei Normalbetrieb zeigt das Display den Wert des im Parameter /4 eingestellten Fühlers an (=1 Default-Raumfühler, =2 zweiter Fühler, 3= dritter Fühler). Die Display-LEDs zeigen außerdem den Aktivierungszustand der Funktionen an (siehe Tab. 1), während über die 3 Tasten einige Funktionen aktiviert/deaktiviert werden können (siehe Tab. 2).

LEDs und Funktionen

Piktogr.	Funktion	Normalbetrieb			Start
		EIN	AUS	Blinkt	
	Verdichter	Eingeschaltet	Ausgeschaltet	Angefordert	EIN
	Ventilator	Eingeschaltet	Ausgeschaltet	Angefordert	EIN
	Abtauung	Eingeschaltet	Ausgeschaltet	Angefordert	EIN
AUX	Aux	Gerät eingeschaltet	Gerät ausgeschaltet	-	EIN
	Alarm	Alle	Kein Alarm	-	EIN
	Uhr	RTC vorhanden und aktiviert, und es wurde mindestens 1 Zeitzyklus eingestellt	RTC nicht vorhanden oder deaktiviert, oder es wurde kein Zeitzyklus eingestellt	-	EIN, falls RTC vorhanden

Tab. 1

Tabelle der Funktionsaktivierung über die Tasten - Modelle S, X, Y, C

Taste		Normalbetrieb		Start	
		Einzelner Tastendruck	Kombinierter Tastendruck		
	U P ON/OFF	Für länger als 3 Sek.: abwechselnde Anzeige des EIN/AUS-Zustandes	Zusammen gedrückt wird der	-	
	D o w n Defrost	Für länger als 3 Sek.: aktiviert/deaktiviert die Abtauung	Dauerbetrieb aktiviert/deaktiviert	Zusammen gedrückt wird das Parameter-RESET aktiviert	Für 1 Sek. wird der Code der Firmware-Version eingeblendet
set	Set mute	- 1 Sek.: Anzeige/Einstellung des Sollwertes - Für länger als 3 Sek.: Zugriff auf das Menü der Parameterkonfiguration (Passwort '22' eingeben) - Stellt akustischen Alarm (Summer) ab	-		für 1 Sek., die active EZY Kabine RESET

Tab. 2

Tabelle der Tastenfunktionen - Variante Modell M

Taste	Normalbetrieb	Start	
	Schnellwahl des anzuzeigenden Fühlers	Zusammen mit "set" gedrückt wird das Parameter-RESET-Verfahren aktiviert	Für 1 Sek. wird der Code der Firmware-Version eingeblendet

Einstellung des Sollwertes (gewünschte Temperatur)

- Für 1 Sekunde SET drücken, der eingestellte Wert beginnt kurz darauf zu blinken;
- Den Wert mit UP oder DOWN erhöhen oder vermindern;
- SET drücken, um den neuen Wert zu bestätigen.

EIN/AUS des Gerätes: UP für länger als 3 Sekunden drücken. Unter dieser Bedingung sind die Regelungsalgorithmen und Abtauung deaktiviert, und das Gerät zeigt abwechselnd die Meldung "OFF" und den Fühlertemperaturmesswert an.

Manuelle Abtauung (nur für Modelle S, X, Y und C)

Für länger als 3 Sekunden DOWN drücken (wird nur bei korrekten Temperaturbedingungen aktiviert).

Dauerbetrieb (nur für Modelle S, X, Y und C)

Gleichzeitig UP und DOWN für 3 Sekunden drücken.

Schnellwahl des anzuzeigenden Fühlers (nur für Modell M)

DOWN kurz drücken, um den vorübergehend anzuzeigenden Fühler zu wählen.

Zugriff und Änderung der Parameter F (häufige Param.) und C (Konfigurationsparam.)

1. SET für 3 Sekunden drücken (auf dem Display erscheint "PS");
2. • Für den Zugriff auf das Menü der Parameter F und C das Passwort "22" mit UP/DOWN eingeben.
   • Für den Zugriff nur auf das Menü der Parameter F SET drücken (ohne Passwortengabe).
3. Das Parametermenü kann mit UP/DOWN abgefahren werden.
4. • Zur Anzeige/Änderung der Parameterwerte SET, dann UP/DOWN und schließlich SET zur Bestätigung der Änderung drücken (es erfolgt die Rückkehr zum Parametermenü).

Zur endgültigen Speicherung aller geänderten Werte und zum Verlassen des Parametermenüs SET für 3 Sek. drücken. Zum Verlassen des Menüs ohne Speicherung der geänderten Werte (Verlassen wegen Time-out) für mindestens 60 Sek. keine Taste drücken.

Sicherheitsvorschriften

Übereinstimmung mit den einschlägigen europäischen Vorschriften. Vorsichtsmaßnahmen bei der Installation:
- Die Anschlusskabel müssen bis zu 90 °C Isolierung garantieren.
- Für die 12 Vac-Versionen Trafos der Klasse II verwenden. Zur Einhaltung der Vorschriften EN 61000-4-4, EN 61000-4-5, EN 61000-4-11, EN 61000-4-6, EN 60730-1 muss der Trafo einem der angegebenen Modelle entsprechen (siehe CAREL-Preisliste). Da für die 12-Vac/dc-Versionen nicht die doppelte Isolierung zwischen den Versorgungssteckern und den Relasausgängen garantiert werden kann, sollten nur mit SELV versorgte Lasten verwendet werden (bis 42 V effektive Nennspannung).
- Mindestens 10 mm Abstand zwischen dem Gehäuse und den leitenden Teilen vorsehen.
- Die Anschlüsse der digitalen und analogen Eingänge müssen weniger als 30 m Abstand aufweisen; die Kabel sind zur Einhaltung der obgenannten Vorschriften angemessen zu trennen.

Die Anschlusskabel der Ausgänge gut befestigen, um Kontakte mit Niedrigstspannungsteilen zu vermeiden.

Zertifizierungen nur für PQEZ

Anwendungen mit brennbaren Kältemittelgasen: IEC / EN / UL 60335-2-24 (Abschnitte 22.109, 22.110) - IEC / EN / UL 60335-2-40 (Abschnitte 22.116, 22.117) - IEC / EN / UL 60335-2-89 (Abschnitte 22.107, 22.108, 22.109) für Gase R50, R290, R600, R600a, R-1234ze. IEC / EN / UL 60079-15 (Abschnitte 17 und 19 gelten für die Relais entsprechend ihrem Typ. Die Akzeptanz sollte im endgültigen Antrag immer überprüft und beurteilt werden).

SPA Descripción:

PIEZ* y PQEZ* (modelos S, C, M, Y, X) representan una gama de reguladores electrónicos a microprocesador con visualización por LED realizados para la gestión de unidades frigoríficas, vitrinas y mostradores frigoríficos. Los PIEZ * se suministran con relés estándar. Los PQEZ * están diseñados específicamente para su uso en aplicaciones con refrigerantes inflamables. Modelos disponibles:
- P(1,Q)EZS*, indicados para la gestión de unidades frigoríficas estáticas, carentes de ventilador en el evaporador, que funcionan con temperaturas por encima de 0°C;
- P(1,Q)EZC*, indicados para la gestión de unidades frigoríficas ventiladas a baja temperatura.
- P(1,Q)EZ(Y, X)*, indicados para la gestión de unidades frigoríficas estáticas, carentes de ventilador, que funcionan a baja temp.;
- P(1,Q)EZM*, solución para la medida simple de la temperatura

Nota: mod. Y= relés conectados electrónicamente en el interior entre sí; mod. X= relés independientes.

Visualizaciones y funciones

Durante el funcionam. normal, el control muestra en el display el valor de la sonda ajustada con el param. /4 (=1 sonda ambiente predeterminada, =2 segunda sonda, 3= tercera sonda). Además, en el display aparecen los LED que indican la activación de las funciones del control (ver Tab. 1), mientras que las 3 teclas permiten activar desactivar algunas funciones (ver Tab. 2).

LED y funciones asociadas

icono	función	funcionamiento normal			arranque
		ON	OFF	parpadeo	
	compresor	encendido	apagado	demanda	ON
	ventilador	encendido	apagado	demanda	ON
	desescarche	encendido	apagado	demanda	ON
AUX	aux	salida encendida	salida apagada	-	ON
	alarma	todas	ninguna alarma	-	ON
	reloj	RTC presente y habilitado, y se ha ajustado al menos una franja horaria	RTC ausente o deshabilitado, o no se ha ajustado al menos una franja horaria	-	ON si RTC presente

Tab. 1

Tabla de activación de funciones por medio de las teclas - mod. S, X, Y, C

tecla		funcionamiento normal		arranque	
		pulsación de la tecla sola	presión combinada		
	arriba ON/OFF	más de 3 s: alterna estados ON/OFF	Pulsados juntos activan/desactivan ciclo continuo	-	
	abajo desesc.	más de 3 s: activa/desactiva desescarche		Pulsados juntos activan el procedimiento RESET de los parámetros	durante 1 s muestra cód. vers. firmware
set	set mute	- 1 s.: muestra/permite ajustar el punto de consigna - más de 3 s: acceso al menú de ajuste de parámetros (insertar contraseña '22') - Apaga alarma acústica (zumbador)	-		por 1 s RESET banco EZY corriente

Tab. 2

Tabla de funciones de teclas - variante mod. M

tecla	funcionamiento normal	arranque	
	selección rápida de sonda visualizada	Pulsando a la vez que "set" activa el procedimiento de RESETEO de parámetros.	durante 1 s muestra cód. vers. firmware

Ajustes del punto de consigna (valor de temperatura deseado)

pulsar durante 1 s SET, después de unos instantes el valor ajustado parpadea;
- aumentar o disminuir dicho valor con las flechas ARRIBA o ABAJO;
- pulsar SET para confirmar el nuevo valor.

ON/OFF del instrumento: Pulsar durante más de 3 s ARRIBA. En esta condición los algoritmos de regulación y desescarche son deshabilitados y el instrumento alterna la visualización en el display del mensaje "OFF" y la de la temperatura de la sonda ajustada.

Desescarche manual (sólo para mod. S, X, Y y C)

Pulsar durante más de 3 s ABAJO (se activa sólo si subsisten las condiciones de temperatura).

Ciclo continuo (sólo para mod. S, X, Y y C)

Pulsar simultáneamente durante más de 3 s ARRIBA y ABAJO.

Selección rápida de sonda visualizada (sólo para mod. M)

Pulsar repetidamente la tecla ABAJO para seleccionar la sonda a visualizar temporalmente.

Acceso y modificación de parámetros tipo F (frecuentes) y tipo C (configuración)

1. Pulsar SET durante 3 s (en el display aparecerá "PS");
2. • Para acceder al menú de los parámetros de tipo F e C dteclear la contraseña "22" con ARRIBA/ABAJO;
   • Para acceder sólo al menú de los parámetros F pulsar SET (sin teclear contraseña);
3. navegar al interior del menú de parámetros con ARRIBA/ABAJO;
4. • Para visualizar/modificar los valores del parámetro visualizado pulsar SET, y luego ARRIBA/ABAJO y finalmente SET para confirmar la modificación (así se vuelve al menú de los parámetros).

Para guardar definitivamente todos los valores modificados y salir del menú de los parám. pulsar SET durante 3 s. Para salir del menú sin guardar los valores modificados (salida por agotamiento de tiempo) no pulsar ninguna tecla durante al menos 60 s.

Normativas de seguridad

Conforme a las Normativas europeas de la materia. Precauciones de instalación:
- Los cables de conexión deben garantizar el aislamiento hasta a 90 °C;
- Para las versiones de 12 Vca utilizar transformadores de Clase II. Para respetar las normativas EN 61000-4-4, EN 61000-4-5, EN 61000-4-11, EN 61000-4-6, EN 60730-1, el transformador debe ser de uno de los modelos indicados (ver Lista de Precios de CAREL). Para las versiones 12 vac/dc, no siendo posible garantizar el aislamiento doble, entre el conector de alimentación y las salidas relés, se aconseja utilizar cargas alimentadas solamente con muy baja tensión de seguridad (hasta 42V nominales de valor eficaz);
- Prever al menos 10 mm de distancia entre el contenedor y las partes conductoras próximas;
- Conexiones de las entradas digitales y analógicas inferiores a 30 m de distancia; adoptar las medidas adecuadas de separación de cables para respetar la normativa de inmunidad.

Bloquear bien los cables de conexión de las salidas para evitar contactos con las partes en Bajísima Tensión de seguridad.

Certificaciones solo para PQEZ

Aplicaciones con gases refrigerantes inflamables: IEC / EN / UL 60335-2-24 (cláusulas 22.109, 22.110) - IEC / EN / UL 60335-2-40 (cláusulas 22.116, 22.117) - IEC / EN / UL 60335-2-89 (cláusulas 22.107, 22.108, 22.109) para gases R50, R290, R600, R600a, R-1234ze. IEC / EN / UL 60079-15 (cláusulas 17 y 19, aplicadas a los relés según su tipo. La aceptabilidad siempre debe ser verificada y juzgada en la aplicación final).

POR Descrição:

PIEZ* y PQEZ* (modelos S, C, M, Y, X) representam uma gama de reguladores electrónicos com microprocessador e com visualização por LEDs concebidos para a gestão de unidades frigoríficas, vitrines e bancadas refrigeradas. Os PIEZ * são fornecidos com relés padrão. Os reguladores PQEZ * são projetados especificamente para uso em aplicações com refrigerantes inflamáveis. Modelos disponíveis:
- P(1,Q)EZS*, indicado para a gestão de unidades estáticas de refriger., sem ventilador no evaporad., funcionante com temp. acima de 0°C;
- P(1,Q)EZC*, indicado para a gestão de unidades de refrigeração ventiladas em baixa temperatura;
- P(1,Q)EZ(Y, X)*, indicado para a gestão de unidades estáticas de refrigeração, sem ventilador, funcionante em baixa temp.;
- P(1,Q)EZM*, solução para simples mensuração da temperatura

Nota: mod. Y= relés electrónicamente ligados entre eles no interior; mod. X= relés independentes.

Visualização e funções: Durante o normal funcionamento, o controle indica no visor o valor da sonda programada com o parâmetro/4 (=1 sonda ambiente por defeito,=2 segunda sonda, 3= terceira sonda). No visor aparecem também os LEDs que indicam a activação das funções de controle (ver Tab. 1), enquanto que as 3 teclas permitem activar/desactivar algumas funções (ver Tab. 2).

LEDs e funções associadas

icone	função	normal funcionamento			start up
		ON	OFF	blink	
	compressor	ligado	desligado	solicitado	ON
	ventilador	ligado	desligado	solicitado	ON
	defrost	ligado	desligado	solicitado	ON
AUX	aux	saída ligada	saída desligada	-	ON
	alarme	todos	nenhum alarme	-	ON
	relógio	RTC presente e activado, e foi programada pelo menos uma faixa horária	RTC ausente ou desactivado, ou não foi programada nenhuma faixa horária	-	ON se RTC presente

Tab. 1

Tabela de ativação das funções através de botões - mod. S, X, Y, C

tecla		normal funcionamento		start up	
		pressão de uma única tecla	pressão combinada		
	up ON/OFF	mais de 3 s: alterna entre os estados ON e OFF	Premidas simultâneamente activam/desactivam o ciclo contínuo	-	
	down defrost	mais de 3 s: activa/desactiva defrost		Premidas ultâneamente activam/ho procedimento RESET parâmetros	durante 1 s visualiza cód. vers. firmware
set	set mute	- 1 s: visualiza/permite programar set point - mais de 3 s: acesso ao menu de programação de parâmetros (inserir password '22') - silencia o alarme acústico (buzzer)	-		por 1 seg. RESET bancadas EZY activadas

Tab. 2

Tabela de função dos botões - variante mod. M

tecla	normal funcionamento	start up	
	seleção rápida da sonda visualizada	Manter apertado junto com "set" para ativar o procedimento de RESET dos parâmetros.	durante 1 s visualiza cód. vers. firmware

Programações do set point (valor de temperatura desejado)

- prema durante 1 s SET, pouco depois o valor programado surge intermitente;
- aumente ou diminua ese valor com UP ou DOWN;
- prema SET para confirmar o novo valor.

ON/OFF do instrumento

Prema durante mais de 3 s UP. Nesta condição, os algoritmos de regulação e defrost estão activados e o instrumento alterna no visor a visualização da mensagem "OFF" com a da temperatura programada.

Descongelamento manual (somente para modelos S, X, Y e C)

Prema durante mais de 3 s DOWN (só é activado se persistirem as condições de temperatura).

Ciclo contínuo (somente para modelos S, X, Y e C)

Prema simultâneamente durante mas de 3 s UP e DOWN.

Seleção rápida da sonda visualizada (somente para modelos M)

Aperte DOWN rapidamente para selecionar a sonda a ser visualizada temporariamente.

Acesso e modificação dos parâmetros tipo F (freqüentes) e tipo C (configuração)

1. prema SET durante 3 s (no visor aparecerá "PS");
2. • para aceder ao menu de parâmetros do tipo F e C digite a password "22" com UP/DOWN;
   • para aceder só ao menu de parâmetros F prema SET (sem digitar a password);
3. navegue no menu de parâmetros com UP/DOWN;
4. • para visualizar/modificar os valores do parâmetro visualizado prema SET, e depois UP/DOWN e de novo SET para confirmar a modificação (regressa então ao menu dos parâmetros).

Para guardar definitivamente todos os valores modificados e sair do menu de parâmetros prema SET durante 3 s;
Para sair do menu sem guardar os valores modificados (saída por "time out") não prema nenhuma tecla durante pelo menos 60s.

Normas de segurança

conformes às Normativas europeias na matéria. Precauções de instalação:
- os cabos de ligação devem garantir o isolamento até aos 90ºC;
- para as versões 12 Vac utilizar transformadores Classe II. Para respeitar as normativas de imunidade (Surge), o transformador deve ser escolhido entre os modelos indicados (ver Lista de Preços CAREL). Para as versões 12 Vac/dc, como a dupla isolação não pode ser garantida entre a fonte de tensão e os relés, se somente utilize cargas de baixa voltagem (até 42V médios efetivos);
- prevejа pelo menos 10mm de distância entre o contentor e as partes condutoras vizinhas;
- ligações das entradas digitais e analógicas inferiores a 30m de distância; adopte as medidas de separação adequadas para os cabos de modo a respeitar as normativas de imunidade.

Bloqueie bem os cabos de conexão das saídas para evitar contactos com partes em Baixíssima Tensão de segurança.

Certificações apenas para PQEZ

Aplicações com gases refrigerantes inflamáveis: IEC / EN / UL 60335-2-24 (cláusulas 22.109, 22.110) - IEC / EN / UL 60335-2-40 (cláusulas 22.116, 22.117) - IEC / EN / UL 60335-2-89 (cláusulas 22.107, 22.108, 22.109) para gases R50, R290, R600, R600a, R-1234ze. IEC / EN / UL 60079-15 (cláusulas 17 e 19, aplicadas aos relés de acordo com seu tipo. A aceitabilidade deve ser sempre verificada e julgada na aplicação final).

CAREL INDUSTRIES HQs
Via dell'Industria, 11 - 35020 Brugine - Padova (Italy)
Tel. (+39) 0499716611 – Fax (+39) 0499716600 – http://www.carel.com – e-mail: carel@carel.com

CAREL si riserva la possibilità di apportare modifiche o cambiamenti ai propri prodotti senza alcun preavviso. / CAREL reserves the right to modify the features of its products without prior notice.

+050004140 - rel. 1.6 - 28.10.2020

TEMPERATURE - PRESSURE CHART

NATURAL REFRIGERANTS

www.sporlanonline.com

At Sea Level, psig

TEMP. °F	TEMP. °C	HC (A3) 170(K)	HC (A3) 290(O)	HC (A3) 441A	HC (A3) 600a(U)	AMMONIA (B2L) 717(A)	CO2 (A1) 744
-50	-45.6	78.9	*4.3*	*21.1*	*23.6*	*14.3*	103.4
-45	-42.8	88.1	*0.9*	*19.7*	*22.6*	*11.7*	116.6
-40	-40.0	98.1	1.4	*18.1*	*21.4*	*8.8*	131.0
-35	-37.2	108.7	3.4	*16.3*	*20.2*	*5.4*	146.5
-30	-34.4	120.0	5.7	*14.3*	*18.8*	*1.6*	163.1
-29	-33.9	122.4	6.1	*13.8*	*18.5*	*0.8*	166.6
-28	-33.3	124.7	6.6	*13.4*	*18.1*	*0.0*	170.1
-27	-32.8	127.1	7.1	*12.9*	*17.8*	0.4	173.7
-26	-32.2	129.6	7.6	*12.5*	*17.5*	0.8	177.3
-25	-31.7	132.1	8.1	*12.0*	*17.2*	1.3	181.0
-24	-31.1	134.6	8.6	*11.5*	*16.8*	1.7	184.8
-23	-30.6	137.1	9.1	*11.0*	*16.5*	2.2	188.5
-22	-30.0	139.7	9.6	*10.5*	*16.2*	2.6	192.4
-21	-29.4	142.3	10.2	*10.0*	*15.8*	3.1	196.3
-20	-28.9	144.9	10.7	*9.5*	*15.4*	3.6	200.2
-19	-28.3	147.6	11.3	*9.0*	*15.1*	4.1	204.2
-18	-27.8	150.3	11.8	*8.4*	*14.7*	4.6	208.3
-17	-27.2	153.0	12.4	*7.9*	*14.3*	5.1	212.4
-16	-26.7	155.7	13.0	*7.3*	*13.9*	5.6	216.5
-15	-26.1	158.5	13.6	*6.7*	*13.5*	6.2	220.8
-14	-25.6	161.4	14.2	*6.1*	*13.1*	6.7	225.0
-13	-25.0	164.2	14.8	*5.5*	*12.7*	7.3	229.4
-12	-24.4	167.1	15.4	*4.9*	*12.2*	7.8	233.8
-11	-23.9	170.0	16.1	*4.3*	*11.8*	8.4	238.2
-10	-23.3	173.0	16.7	*3.7*	*11.4*	9.0	242.7
-9	-22.8	176.0	17.4	*3.0*	*10.9*	9.6	247.3
-8	-22.2	179.0	18.0	*2.4*	*10.4*	10.3	251.9
-7	-21.7	182.1	18.7	*1.7*	*10.0*	10.9	256.6
-6	-21.1	185.2	19.4	*1.0*	*9.5*	11.5	261.3
-5	-20.6	188.3	20.1	*0.3*	*9.0*	12.2	266.1
-4	-20.0	191.5	20.8	0.2	*8.5*	12.9	271.0
-3	-19.4	194.7	21.5	0.6	*8.0*	13.6	275.9
-2	-18.9	197.9	22.2	0.9	*7.5*	14.3	280.9
-1	-18.3	201.2	22.9	1.3	*7.0*	15.0	285.9
0	-17.8	204.5	23.7	1.7	*6.4*	15.7	291.0
1	-17.2	207.9	24.5	2.1	*5.9*	16.4	296.2
2	-16.7	211.3	25.2	2.5	*5.3*	17.2	301.5
3	-16.1	214.7	26.0	2.9	*4.8*	18.0	306.8
4	-15.6	218.2	26.8	3.3	*4.2*	18.8	312.1
5	-15.0	221.7	27.6	3.7	*3.6*	19.6	317.6
6	-14.4	225.2	28.4	4.1	*3.0*	20.4	323.1
7	-13.9	228.8	29.2	4.5	*2.4*	21.2	328.6
8	-13.3	232.4	30.1	5.0	*1.8*	22.1	334.2
9	-12.8	236.0	30.9	5.4	*1.2*	22.9	339.9
10	-12.2	239.7	31.8	5.8	*0.5*	23.8	345.7
11	-11.7	243.5	32.7	6.3	0.0	24.7	351.5
12	-11.1	247.2	33.6	6.8	0.4	25.6	357.4
13	-10.6	251.1	34.5	7.2	0.7	26.5	363.4
14	-10.0	254.9	35.4	7.7	1.0	27.5	369.5
15	-9.4	258.8	36.3	8.2	1.4	28.4	375.6
16	-8.9	262.7	37.2	8.7	1.7	29.4	381.8
17	-8.3	266.7	38.2	9.2	2.1	30.4	388.0
18	-7.8	270.7	39.2	9.7	2.4	31.4	394.3
19	-7.2	274.8	40.1	10.3	2.8	32.4	400.7
20	-6.7	278.9	41.1	10.8	3.2	33.5	407.2
21	-6.1	283.0	42.1	11.3	3.5	34.6	413.8
22	-5.6	287.2	43.2	11.9	3.9	35.7	420.4
23	-5.0	291.4	44.2	12.5	4.3	36.8	427.1
24	-4.4	295.7	45.2	13.0	4.7	37.9	433.8
25	-3.9	300.0	46.3	13.6	5.1	39.0	440.7
26	-3.3	304.4	47.4	14.2	5.5	40.2	447.6
27	-2.8	308.8	48.5	14.8	5.9	41.4	454.6
28	-2.2	313.2	49.6	15.4	6.3	42.6	461.7
29	-1.7	317.7	50.7	16.0	6.8	43.8	468.8
30	-1.1	322.3	51.8	16.6	7.2	45.0	476.1
31	-0.6	326.8	53.0	17.3	7.6	46.3	483.4
32	0.0	331.5	54.1	17.9	8.1	47.6	490.8
33	0.6	336.1	55.3	18.6	8.5	48.9	498.3
34	1.1	340.9	56.5	19.2	9.0	50.2	505.8
35	1.7	345.6	57.7	19.9	9.4	51.6	513.4
36	2.2	350.4	58.9	20.6	9.9	52.9	521.2
37	2.8	355.3	60.1	21.3	10.4	54.3	529.0
38	3.3	360.2	61.4	22.0	10.9	55.7	536.9
39	3.9	365.2	62.7	22.7	11.4	57.2	544.8
40	4.4	370.2	63.9	23.4	11.9	58.6	552.9
41	5.0	375.2	65.2	24.2	12.4	60.1	561.0
42	5.6	380.3	66.6	24.9	12.9	61.6	569.3
43	6.1	385.5	67.9	25.7	13.4	63.1	577.6
44	6.7	390.7	69.2	26.4	14.0	64.7	586.0
45	7.2	395.9	70.6	27.2	14.5	66.3	594.5
46	7.8	401.2	72.0	28.0	15.0	67.9	603.1
48	8.9	412.0	74.8	29.6	16.2	71.1	620.5
50	10.0	422.9	77.6	31.3	17.3	74.5	638.3
52	11.1	434.1	80.6	67.7	18.5	78.0	656.5
54	12.2	445.5	83.6	70.2	19.7	81.6	675.0
55	12.8	451.2	85.1	71.4	20.3	83.4	684.5
56	13.3	457.1	86.7	72.7	20.9	85.2	694.0
58	14.4	468.9	89.8	75.3	22.2	89.0	713.3
60	15.6	480.9	93.0	77.9	23.5	92.9	733.1
62	16.7	493.2	96.3	80.6	24.9	96.9	753.2
64	17.8	505.7	99.7	83.4	26.3	101.1	773.8
65	18.3	512.1	101.4	84.7	27.0	103.2	784.2
66	18.9	518.5	103.1	86.2	27.7	105.3	794.8
68	20.0	531.4	106.6	89.0	29.1	109.7	816.2
70	21.1	544.7	110.2	91.9	30.6	114.2	838.1
72	22.2	558.2	113.9	94.9	32.2	118.8	860.5
74	23.3	571.9	117.6	97.9	33.7	123.5	883.3
75	23.9	578.9	119.5	99.5	34.5	125.9	894.9
76	24.4	585.9	121.4	101.0	35.3	128.3	906.7
78	25.6	600.2	125.4	104.2	37.0	133.3	930.5
80	26.7	614.8	129.3	107.4	38.7	138.4	954.9
82	27.8	629.7	133.4	110.7	40.4	143.7	979.8
84	28.9	644.9	137.6	114.1	42.2	149.1	1005.4
85	29.4	652.7	139.7	115.8	43.1	151.8	1018.4
86	30.0	660.5	141.8	117.5	44.0	154.6	1031.6
88	31.1	676.4	146.1	120.9	45.9	160.3	*
90	32.2	*	150.5	124.5	47.8	166.1	*
92	33.3	*	155.0	128.1	49.7	172.0	*
94	34.4	*	159.6	131.8	51.7	178.1	*
95	35.0	*	161.9	133.6	52.7	181.2	*
96	35.6	*	164.3	135.5	53.7	184.4	*
98	36.7	*	169.1	139.3	55.8	190.8	*
100	37.8	*	173.9	143.2	57.9	197.3	*
102	38.9	*	178.9	147.2	60.1	204.0	*
104	40.0	*	183.9	151.2	62.3	210.9	*
105	40.6	*	186.5	153.2	63.5	214.4	*
106	41.1	*	189.1	155.3	64.6	217.9	*
108	42.2	*	194.3	159.5	66.9	225.1	*
110	43.3	*	199.6	163.7	69.3	232.5	*
112	44.4	*	205.1	168.0	71.7	240.0	*
114	45.6	*	210.6	172.4	74.2	247.7	*
115	46.1	*	213.4	174.6	75.5	251.6	*
120	48.9	*	227.8	186.0	82.0	271.9	*
125	51.7	*	242.9	197.9	88.8	293.3	*
130	54.4	*	258.7	210.3	95.9	315.8	*
135	57.2	*	275.1	223.1	103.5	339.6	*
140	60.0	*	292.3	236.5	111.4	364.7	*
145	62.8	*	310.2	250.5	119.6	391.0	*
150	65.6	*	328.9	264.9	128.3	418.7	*
155	68.3	*	348.4	279.9	137.4	447.8	*
160	71.1	*	368.7	295.5	146.9	478.3	*
165	73.9	*	389.9	311.6	156.8	510.2	*

*Exceeds critical temperature

To determine Subcooling for 400-Series blends, use Bubble Point in Gray.
To determine Superheat for 400-Series blends, use Dew Point in Blue.

Pressure, psig (pounds per square inch guage), BOLD
Vacuum, inhg (inches of Mercury), Italics

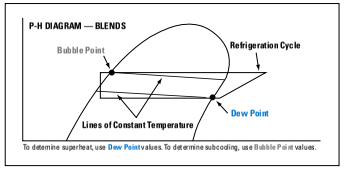

USE THIS QR CODE TO DOWNLOAD
CHILLMASTER P-T APP

P-T data generated by NIST Refprop

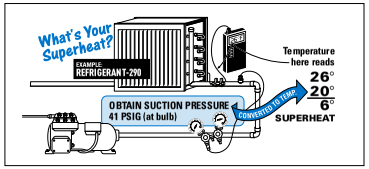

Form 5-491 / 52016
©Copyright 2016 Parker Hannifin Corporation

D1: PARTS LIST

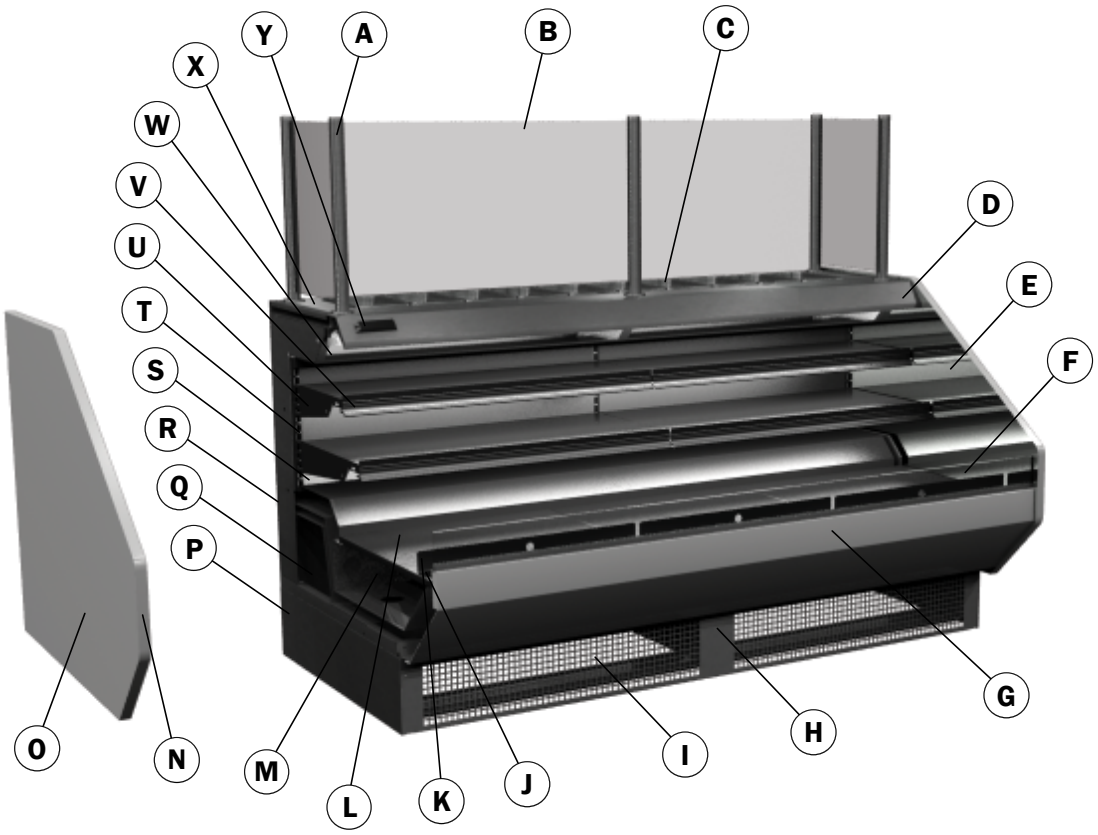

A	Sneezeglass Post Hardware
B	Sneezeglass
C	1/4 Size Deli Pan
D	Cornice
E	Interior End Panel
F	Die Board Plex
G	Die Board
H	Front Toekick
I	Condenser Air Intake
J	Air Return
K	Product Stop
L	Bottom Deck
M	Insulated Drain Pan
N	End Panel Trim
O	End Panel
P	End Toekick
Q	Compressor Compartment
R	Outside Back
S	Inside Back
T	Shelf Standard
U	Adjustable Shelf Bracket
V	Price Tag Molding
W	Air Discharge
X	Case Top
Y	Solar Digital Thermometer

Hillphoenix

A DOVER COMPANY

Hill PHOENIX, Inc.
Hereinafter Referred To As Manufacturer

LIMITED WARRANTY

GENERAL WARRANTY

Manufacturer's products are warranted to be free from defects in materials and workmanship under normal use and maintenance for fourteen months from date of shipment from manufacturer (the "Base Warranty Period"). In the event of a qualifying warranty claim, a new or rebuilt part to replace any defective part will be provided without charge. The replacement part is covered under this warranty for the remainder of the applicable Base Warranty Period. In order to be eligible for warranty coverage, customer must: (i) notify Manufacturer promptly upon discovery of a warrant defect, and (ii) comply with the warranty claim procedures provided by Manufacturer from time to time.

This equipment warranty does not include labor or other costs incurred for diagnosing, repairing, removing, installing, shipping, servicing, or handling of either defective parts or replacement parts.

The warranty shall not apply:

1. To any unit or any part thereof which has been subject to accident, alteration, negligence, misuse or abuse, or which has not been operated in accordance with the manufacturer's recommendations, or in conditions outside of Manufacturer's specifications, or if the serial number of the unit has been altered, defaced, or removed.
2. When the unit, or any part thereof, is damaged by fire, flood, or other act of God.
3. To products that are impaired or damaged due to improper installation.
4. When installation and startup forms are not properly completed or returned within two weeks after startup.
5. If the defective part is not returned to the Manufacturer.
6. To service, maintenance or wear and tear parts (such as lights, starters and ballasts)

MODIFICATIONS TO GENERAL WARRANTY

The following sets forth certain modifications to the General Warranty for specific products of Manufacturer:

DISPLAY CASE AND SPECIALTY PRODUCTS CLEARVOYANT® LED LIGHTING

The warranty period for Clearvoyant LED lighting components within the Clearvoyant lighting system is five years from date of shipment.

REMEDY LIMITATION/DAMAGES EXCLUSION

THE REMEDY OF REPAIR OR PROVISION OF A REPLACEMENT PART WITHOUT CHARGE SHALL BE THE EXCLUSIVE REMEDY FOR ANY WARRANTY CLAIM HEREUNDER. WITHOUT LIMITING THE FOREGOING, MANUFACTURER SHALL NOT BE LIABLE UNDER ANY CIRCUMSTANCES FOR INCIDENTAL, INDIRECT OR CONSEQUENTIAL DAMAGES, INCLUDING LOSS OF PROFIT, LABOR COST, LOSS OF REFRIGERANT OR FOOD PRODUCTS.

EXCLUSIVE WARRANTY

THE FOREGOING WARRANTY IS THE EXCLUSIVE WARRANTY WITH RESPECT TO THE PRODUCTS. ALL OTHER WARRANTIES, WHETHER EXPRESS OR IMPLIED, INCLUDING WITHOUT LIMITATION, THE WARRANTIES OF MERCHANTABILITY OR FITNESS FOR A PARTICULAR PURPOSE, ARE HEREBY DISCLAIMED AND EXCLUDED. NO IMPLIED WARRANTY SHALL BE DEEMED CREATED BY COURSE OF DEALING OR USAGE OF TRADE. NO OTHER PERSON IS AUTHORIZED TO EXPAND OR CREATE ANY OBLIGATION GREATER THAN OR MORE EXPANSIVE THAN THE WARRANTY PROVIDED HEREIN.

Submit warranty claims to:

Hillphoenix Refrigeration & Power Systems Division
2016 Gees Mill Road
Conyers, GA 30013
Warranty / Service
Phone: 1-833-280-5714

Hillphoenix Display Case Division
1925 Ruffin Mill Road
Colonial Heights, VA 23834
Warranty / Service
Phone: 1-833-280-5714

Hillphoenix Specialty Products Division
703 Franklin Street
Keosauqua, IA 52565
Warranty / Service
Phone: 1-833-280-5714

Warning
Maintenance & Case Care

When cleaning cases the following must be performed PRIOR to cleaning:

To avoid electrical shock, be sure all electric power is turned off before cleaning. In some installations, more than one switch may have to be turned off to completely de-energize the case.

Do not spray cleaning solution or water directly on fan motors or any electrical connections.

All lighting receptacles must be dried off prior to insertion and re-energizing the lighting circuit.

Please refer to the Use and Maintenance section of this installation manual.

Hillphoenix®
A DOVER™ COMPANY

Tel: 319-293-3777

703 Franklin Street, PO Box 478, Keosauqua, IA 52565
Due to our commitment to continuous improvement, all specifications are subject to change without notice.
Hillphoenix is a Sustaining Member of the American Society of Quality.
Visit our website at www.hillphoenix.com