Hill PHOENIX
EXCELLENCE™

Display Case Engineering Reference Manual

1999

OBSOLETE

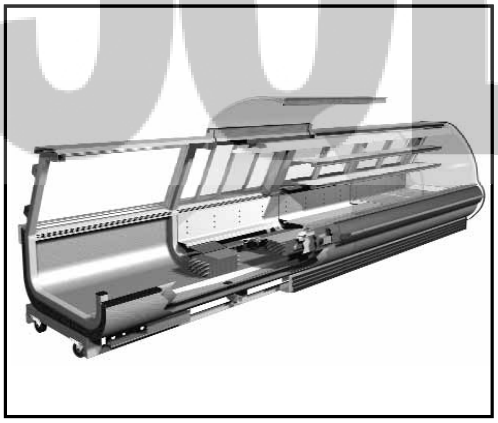

A DOVER DIVERSIFIED COMPANY

Rev. 1 5/99

OBSOLETE

Hill PHOENIX™
EXCELLENCE

OBSOLETE

Statement of Purpose

We will lead the markets we serve with innovative products, solutions and technological advances in a relentless pursuit to exceed customer expectations.

We will create a culture that promotes teamwork, integrity and respect for our customers, our suppliers and ourselves.

We are intolerant of mediocrity and dedicated to continuous improvement as a way of life.

As a result, ***Hill PHOENIX*** will enhance the success of our customers, the return to our shareholders, and the satisfaction of our employees.

Table of Contents

Merchandisers by Design Application

Single Deck Merchandisers **1**

Single Deck Cheese Merchandisers (OC) 2
Single Deck Meat Merchandisers (OM) 4
Single Deck Frozen Meat Merchandisers (OMZ) 8
Single Deck Frozen Food/Ice Cream Merchandisers (OMZD) 10
Single Deck Produce Merchandisers (OP) 12
International Style Self-Service Deli/Seafood Merchandisers (OSIO) 16
Wide International Style Self-Service Deli/Seafood Merchandisers (OWSIO) 20

Multi-Deck Merchandisers **23**

Multi-Deck Dairy/Deli/Meat Merchandisers (O2UM) 24
Multi-Deck Dairy/Deli/Meat Merchandisers (O2.5UM) 28
Multi-Deck Dairy/Deli/Meat Merchandisers (O3UM) 34
Multi-Deck Dairy/Deli/Meat Merchandisers (O3.5UM) 38
Multi-Deck Dairy/Deli/Meat Merchandisers (O4UM) 42
Multi-Deck Dairy/Deli/Meat Merchandisers (O5UM) 46
Multi-Deck Rear Load Dairy Merchandisers (O5DR) 50
Multi-Deck Dairy/Deli/Produce Merchandisers (O5DM) 54
Narrow Multi-Deck Dairy Merchandisers (ON5DM) 60
High Multi-Deck Dairy/Deli/Produce Merchandisers (O5DMH) 62
Multi-Deck Frozen Food Merchandisers (O5Z) 64
Multi-Deck Meat Merchandisers (OHM) 66
Narrow Multi-Deck Meat Merchandisers (ONHM) 68
High Multi-Deck Meat Merchandisers (OHMH) 70
Multi-Deck Produce Merchandisers (OHP) 72
High Multi-Deck Produce Merchandisers (OHPH) 74
Multi-Deck Narrow Dairy/Deli/Meat Merchandisers (ONU) 76
Roll-In Rear Load Dairy Merchandisers (ORDR) 78

Reach-In Door Merchandisers **81**

Glass Door Reach-In Beverage Merchandisers (ORB) 82
Narrow Glass Door Reach-In Beverage Merchandisers (ONRB) 84
Glass Door Reach-In Frozen Food/Ice Cream Merchandisers (ORZ) 86
Narrow Glass Door Reach-In Frozen Food/Ice Cream Merchandisers (ONRZ) 88
High Glass Door Reach-In Frozen Food/Ice Cream Merchandisers (ORZH) 90

Single Deck Island Merchandisers **93**

Wide Island Meat/Deli Merchandisers (OIM) 94
Narrow Island Meat/Deli Merchandisers (ONIM) 98
Wide Island Produce Merchandisers (OIP) 102
Wide Island Frozen Food/Ice Cream Merchandisers (OWIZ / OWIZ(G)) 106

OBSOLETE

Table of Contents

Merchandisers by Design Application (Continued)

Single Deck Island Merchandisers (Continued)

Wide Island Frozen Food/Ice Cream Merchandisers (OWEZ / OWEZ(G)) 108
Island Frozen Food Merchandisers (OIZ) 110
Narrow Island Frozen Food/Ice Cream Merchandisers (ONIZ / ONIZ(G)) 112

Multi-Deck Island Merchandisers 115

Wide Island Multi-Deck Cheese Merchandisers (O3IC) 116-120
Wide Island Multi-Deck Produce Merchandisers (O3IP) 122-124

Service Merchandisers 125

American Style Deli Merchandisers (OSA) 126
American Style Flat Glass Deli Merchandisers (OSM) 130
American Style Meat/Deli/Seafood Gravity Coil Merchandisers (OSAG) 134
American Style Flat Glass Meat/Deli/Seafood Gravity Coil Merchandisers (OGM) 138
International Style Meat/Deli/Seafood Merchandisers (OSI) 142
Wide International Style Meat/Deli/Seafood Merchandisers (OWSI) 146
International Style Flat Glass Meat/Deli/Seafood Merchandisers (OSIF) 148
Flat Glass Service Deli Merchandisers (OLF) 152
Flat Glass Gravity Service Deli Merchandisers (OLFG) 156
American Style Hot Foods Merchandisers (OSAH) 160
International Style Hot Foods Merchandiser (OSIH) 162

Self-Contained Merchandisers 165

Single Deck Meat/Deli Self-Contained Mobile Merchandisers (MMCA-4') 166
International Style Self-Service Deli/Seafood Self-Contained Mobile Merchandisers (OSIOA-4') 168
International Style Self-Service Deli Self-Contained Mobile Merchandisers (OSIOPA-4') 170
International Style Self-Service Frozen Food Self-Contained Mobile Merchandisers (OSIOZA-4') 172
Multi-Deck Dairy/Deli/Meat Self-Contained Mobile Merchandisers (O2.5UMA-4') 174
Multi-Deck Dairy/Deli/Meat Self-Contained Mobile Merchandisers (O3UMA-4') 176
Multi-Deck Self-Contained Dairy/Deli/Produce Merchandisers (O5DMA) 178
Narrow Multi-Deck Self-Contained Dairy/Deli/Meat Merchandisers (ONUA) 182
Wide Island Self-Contained Meat/Deli Merchandisers (OIMA) 186
Wide Island Self-Contained Meat/Deli Merchandisers (OIM(B)A) 188
Narrow Island Self-Contained Meat/Deli Merchandisers (ONIMA) 190
Narrow Island Self-Contained Meat/Deli Merchandisers (ONIM(B)A) 192
Wide Island Self-Contained Produce Merchandisers (OIPA) 194
Wide Island Self-Contained Multi-Deck Cheese Merchandisers (O3ICA) 196
Wide Island Self-Contained Multi-Deck Cheese Merchandisers (O3IC(B)A) 198
International Style Deli/Seafood Self-Contained Mobile Merchandisers (OSIA-4') 200

Index 202

OBSOLETE

Table of Contents

Merchandisers by Departmental Application

Produce

Single Deck Merchandisers 1
OP 12-14

Multi-Deck Merchandisers 23
O5DM 54-59
O5DMH 62-63
OHP 72-73
OHPH 74-75

Single Deck Island Merchandisers 93
OIP / OIP(B) / OIP(BB) 102-105

Multi-Deck Island Merchandisers 115
O3IP / O3IP(B) 122-124

Self-Contained Merchandisers. 165
O5DMA 178-180
OIPA 194-195

Beverage

Multi-Deck Merchandisers 23
O5DM 54-59
ON5DM. 60-61
O5DMH 62-63

Reach-In Door Merchandisers 81
ORB 82-83
ONRB 84-85

Self-Contained Merchandisers. 165
O5DMA 178-180

Dairy

Multi-Deck Merchandisers 23
O2UM 24-27
O2.5UM 28-33
O3UM 34-37
O3.5UM 38-41
O4UM 42-44
O5UM 46-48
O5DR 50-52
O5DM 54-59
ON5DM. 60-61
O5DMH 62-63
ONU 76-77
ORDR 78-80

Self-Contained Merchandisers. 135
O2.5UMA-4' 174-175
O3UMA-4'. 176-177
O5DMA 178-180
ONUA 182-184

Deli

Single Deck Merchandisers 1
OC 2-3
OM 4-6
OSIO 16-18
OWSIO 20-21

Deli (Continued)

Multi-Deck Merchandisers 19
O2UM 24-27
O2.5UM 28-33
O3UM 34-37
O3.5UM 38-41
O4UM 42-44
O5UM 46-48
O5DM 54-59
O5DMH 62-63
OHM 66-67
ONHM 68-69
OHMH 70-71
ONU 76-77

Single Deck Island Merchandisers 93
OIM / OIM(B) / OIM(BB) 94-97
ONIM / ONIM(B) 98-101

Multi-Deck Island Merchandisers 115
O3IC / O3IC(B) 116-120

Service Merchandisers 125
OSA 126-129
OSM 130-132
OSAG 134-137
OGM 138-140
OSI 142-144
OWSI 146-147
OSIF 148-150
OLF. 152-154
OLFG 156-158
OSAH (Hot Foods) 160-161
OSIH (Hot Foods) 162-163

Self-Contained Merchandisers. 165
MMCA-4' 166-167
OSIOA-4' 168-169
OSIOPA-4' 170-171
O2.5UMA-4' 174-175
O3UMA-4'. 176-177
O5DMA 178-180
ONUA 182-184
OIMA 186-187
OIM(B)A 188-189
ONIMA 190-191
ONIM(B)A 192-193
O3ICA 196-197
O3IC(B)A. 198-199
OSIA-4' 200-201

Meat

Single Deck Merchandisers 1
OM 4-6

Multi-Deck Merchandisers 23
O2UM 24-27
O2.5UM 28-33
O3UM 34-37
O3.5UM 38-41
OHM 66-67
ONHM 68-69
OHMH 70-71
ONU 76-77

OBSOLETE

Table of Contents

Merchandisers by Departmental Application (Continued)

Meat (Continued)

Single Deck Island Merchandisers 93
OIM / OIM(B) / OIM(BB) 94-97
ONIM / ONIM(B) 98-101

Service Merchandisers 125
OSAG 134-137
OGM 138-140
OSI 142-144
OWSI 146-147
OSIF 148-150

Self-Contained Merchandisers 165
MMCA-4' 166-167
OSIOA-4' 168-169
OSIOPA-4' 170-171
O2.5UMA-4' 174-175
O3UMA-4' 176-177
ONUA 182-184
OIMA 186-187
OIM(B)A 188-189
ONIMA 190-191
ONIM(B)A 192-193
OSIA-4' 200-201

Seafood

Single Deck Merchandisers 1
OSIO 16-18
OWSIO 20-21

Service Merchandisers 125
OSAG 134-137
OGM 138-140
OSI 142-144
OWSI 146-147
OSIF 148-150

Self-Contained Merchandisers 165
OSIOA-4' 168-169
OSIA-4' 200-201

Frozen Food

Single Deck Merchandisers 1
OMZ (Frozen Meat) 8-9
OMZD 10-11

Multi-Deck Merchandisers 23
O5Z 64-65

Reach-In Door Merchandisers 81
ORZ 86-87
ONRZ 88-89
ORZH 90-91

Single Deck Island Merchandisers 93
OWIZ / OWIZ(G) 106-107
OWEZ / OWEZ(G) 108-109
OIZ 110-111
ONIZ / ONIZ(G) 112-114

Self-Contained Merchandisers 165
OSIOZA-4' 172-173

Ice Cream

Single Deck Merchandisers 1
OMZD 10-11

Reach-In Door Merchandisers 81
ORZ 70-71
ONRZ 72-73
ORZH 74-75

Single Deck Island Merchandisers 93
OWIZ / OWIZ(G) 106-107
OWEZ / OWEZ(G) 108-109
ONIZ / ONIZ(G) 112-114

Self-Contained Merchandisers 165
OSIOZA-4' 172-173

OBSOLETE

OBSOLETE

OBSOLETE

Single Deck Merchandisers

Notes:

- *Average product temperatures are calculated as defined by ASHRAE* standards and should not be used to determine application.*
- *Cases meet FDA** Food Code 1997 product temperature requirements (41°F or less) for hazardous foods when used for their prescribed applications.*
- *Allow for an extra 1/8" per joint when lining up merchandisers.*
- *Front sill height does not affect case performance unless specifically shown.*

* *American Society of Heating Refrigeration and Air Conditioning Engineers*

** *Food and Drug Administration*

Single Deck Deli/Cheese Merchandisers

OC - 6', 8', & 12' deli/cheese

Electrical Data

Model		Fans per Case	Standard Fans 120 Volts Amps	Standard Fans 120 Volts Watts	High Efficiency Fans 120 Volts Amps	High Efficiency Fans 120 Volts Watts	Anti-Condensate Heaters 120 Volts Amps	Anti-Condensate Heaters 120 Volts Watts	Defrost Heaters 208 Volts Amps	Defrost Heaters 208 Volts Watts	Defrost Heaters 240 Volts Amps	Defrost Heaters 240 Volts Watts
OC	6'	2	1.00	50	0.60	40	0.20	24	2.88	600	3.33	798
	8'	2	1.00	50	0.60	40	0.25	30	3.85	800	4.44	1065
	12'	3	1.50	75	0.90	60	0.38	46	5.78	1200	6.67	1600

Lighting Data

Model		Typical per Light Row 120 Volts Amps	Typical per Light Row 120 Volts Watts	Maximum Lighting 120 Volts Amps	Maximum Lighting 120 Volts Watts
OC	6'	0.57	68	0.57	68
	8'	0.57	68	0.57	68
	12'	0.77	92	0.77	92

OBSOLETE

Guidelines & Control Settings

Model	Front Sill Heights	BTUH/ft[1]	Evaporator (°F)	Discharge Air (°F)	Average Product (°F)	Return Air (°F)	Discharge Air Velocity[2] (FPM)
OC	27"	560	12	22	36	37	305
	31" & 33"	415	17	26	35	35	305

[1] BTUH's/ft listed are for parallel operation. Conventional ratings may be approximated by multiplying listed rating by 1.04.

[2] Average discharge air velocity at peak of defrost.

Defrost Controls

Model	Defrosts Per Day	Electric Defrost Fail-safe (min)	Electric Defrost Termination Temp. (°F)	Timed Off Defrost Fail-safe (min)	Timed Off Defrost Termination Temp. (°F)	Hot Gas Defrost Fail-safe (min)	Hot Gas Defrost Termination Temp. (°F)	Reverse Air Defrost Fail-safe (min)	Reverse Air Defrost Termination Temp. (°F)
OC	2	40	49	70	63	26	63	- - - [3]	- - -

[3] NOTE: - - - not an option on this case model.

Medium Temperature Defrost Schedule

No. Per Day	Hours
1	12 midnight
2	12 am - 12 pm
3	6 am - 2 pm - 10 pm
4	12 - 6 am - 12 - 6 pm

All measurements are taken per CRMA specifications.

Hill PHOENIX EXCELLENCE™
A DOVER DIVERSIFIED COMPANY
5/99

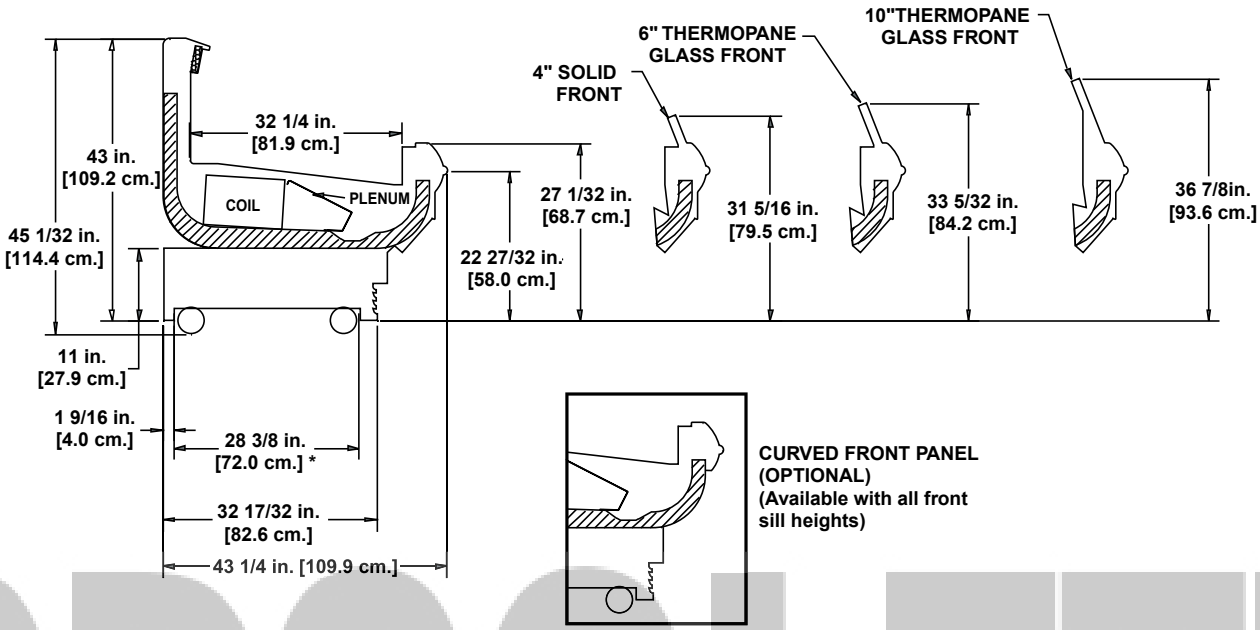

CURVED FRONT PANEL (OPTIONAL) (Available with all front sill heights)

OBSOLETE

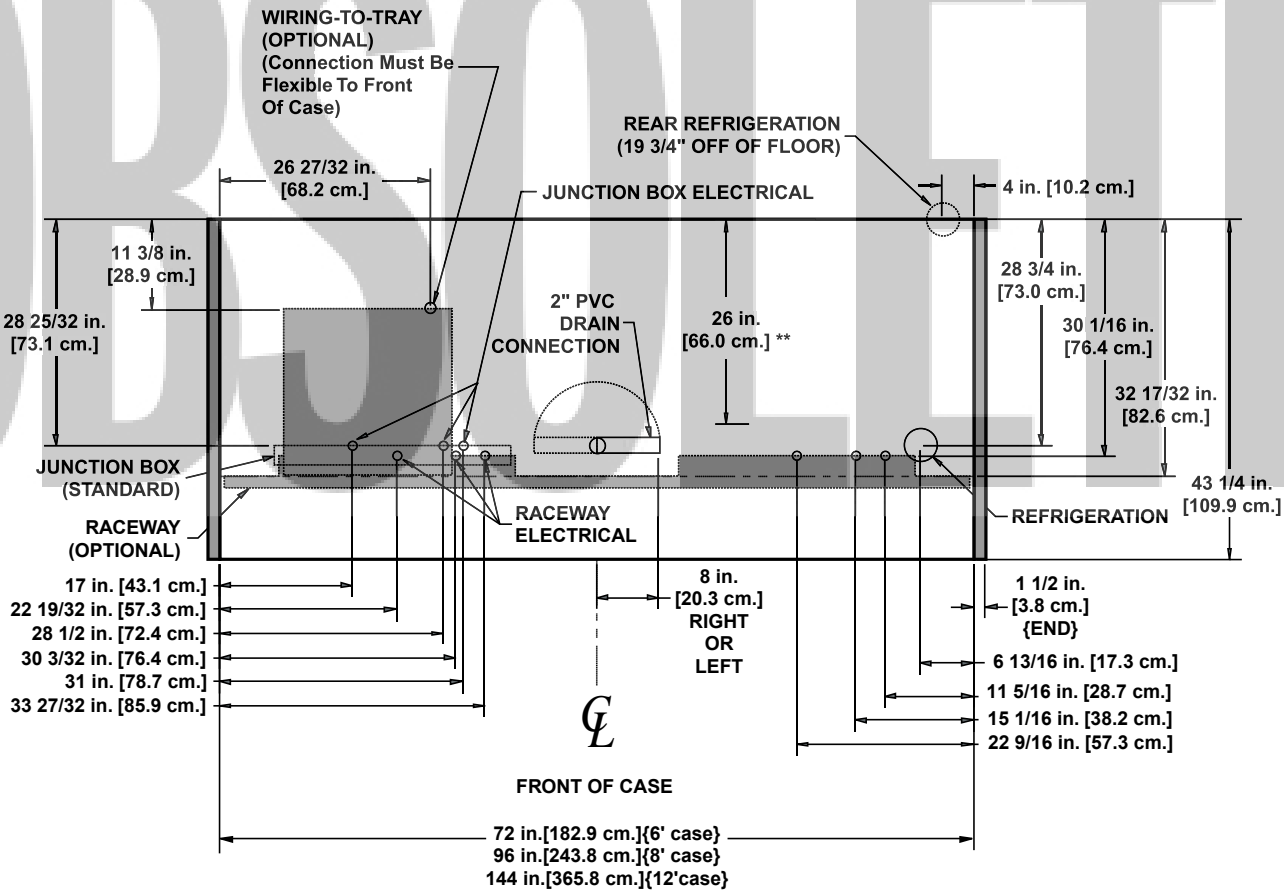

NOTES:

* STUB-UP AREA
** RECOMMENDED STUB-UP CENTERLINE FOR ELECTRICAL AND HUB DRAINS

- ENDS ADD APPROXIMATELY 1 INCH TO CASE HEIGHT
- A 2" MINIMUM AIR GAP IS REQUIRED BETWEEN THE REAR OF THE CASE AND A WALL
- SUCTION LINE - 7/8", LIQUID LINE - 5/8"

Single Deck Meat Merchandisers

OM - 4’, 6’, 8’, & 12’ meat

Electrical Data

Model		Fans per Case	Standard Fans 120 Volts Amps	Standard Fans 120 Volts Watts	High Efficiency Fans 120 Volts Amps	High Efficiency Fans 120 Volts Watts	Anti-Condensate Heaters[1] 120 Volts Amps	Anti-Condensate Heaters[1] 120 Volts Watts	Defrost Heaters 208 Volts Amps	Defrost Heaters 208 Volts Watts	Defrost Heaters 240 Volts Amps	Defrost Heaters 240 Volts Watts
OM	4’	2	1.00	60	0.60	40	0.14	17	1.92	400	2.22	532
	6’	2	1.00	60	0.60	40	0.20	24	2.88	600	3.33	798
	8’	2	1.00	60	0.60	40	0.25	30	3.85	800	4.44	1065
	12’	3	1.50	90	0.90	60	0.38	46	5.77	1200	6.67	1600

Lighting Data

Model		Typical per Light Row 120 Volts Amps	Typical per Light Row 120 Volts Watts	Maximum Lighting 120 Volts Amps	Maximum Lighting 120 Volts Watts
OM	4’	0.57	68	0.57	68
	6’	0.57	68	2.06	247
	8’	0.57	68	2.06	247
	12’	0.77	92	3.08	370

OBSOLETE

Guidelines & Control Settings

Model	Front Sill Heights	BTUH/ft[1]	Evaporator (°F)	Discharge Air (°F)	Average Product (°F)	Return Air (°F)	Discharge Air Velocity[2] (FPM)
OM	27”	480	17	26	35	39	305
	27”	560	12	22	33	37	305
	31” & 33”	415	17	26	34	35	305

[1] BTUH's/ft listed are for parallel operation. Conventional ratings may be approximated by multiplying listed rating by 1.04.

[2] Average discharge air velocity at peak of defrost.

Defrost Controls

Model	Defrosts Per Day	Electric Defrost Fail-safe (min)	Electric Defrost Termination Temp. (°F)	Timed Off Defrost Fail-safe (min)	Timed Off Defrost Termination Temp. (°F)	Hot Gas Defrost Fail-safe (min)	Hot Gas Defrost Termination Temp. (°F)	Reverse Air Defrost Fail-safe (min)	Reverse Air Defrost Termination Temp. (°F)
OM	2	40	49	70	63	26	63	- - -[3]	- - -

[3] NOTE: - - - not an option on this case model.

Medium Temperature Defrost Schedule

No. Per Day	Hours
1	12 midnight
2	12 am - 12 pm
3	6 am - 2 pm - 10 pm
4	12 - 6 am - 12 - 6 pm

Hill PHOENIX™ EXCELLENCE

A DOVER DIVERSIFIED COMPANY

All measurements are taken per CRMA specifications.

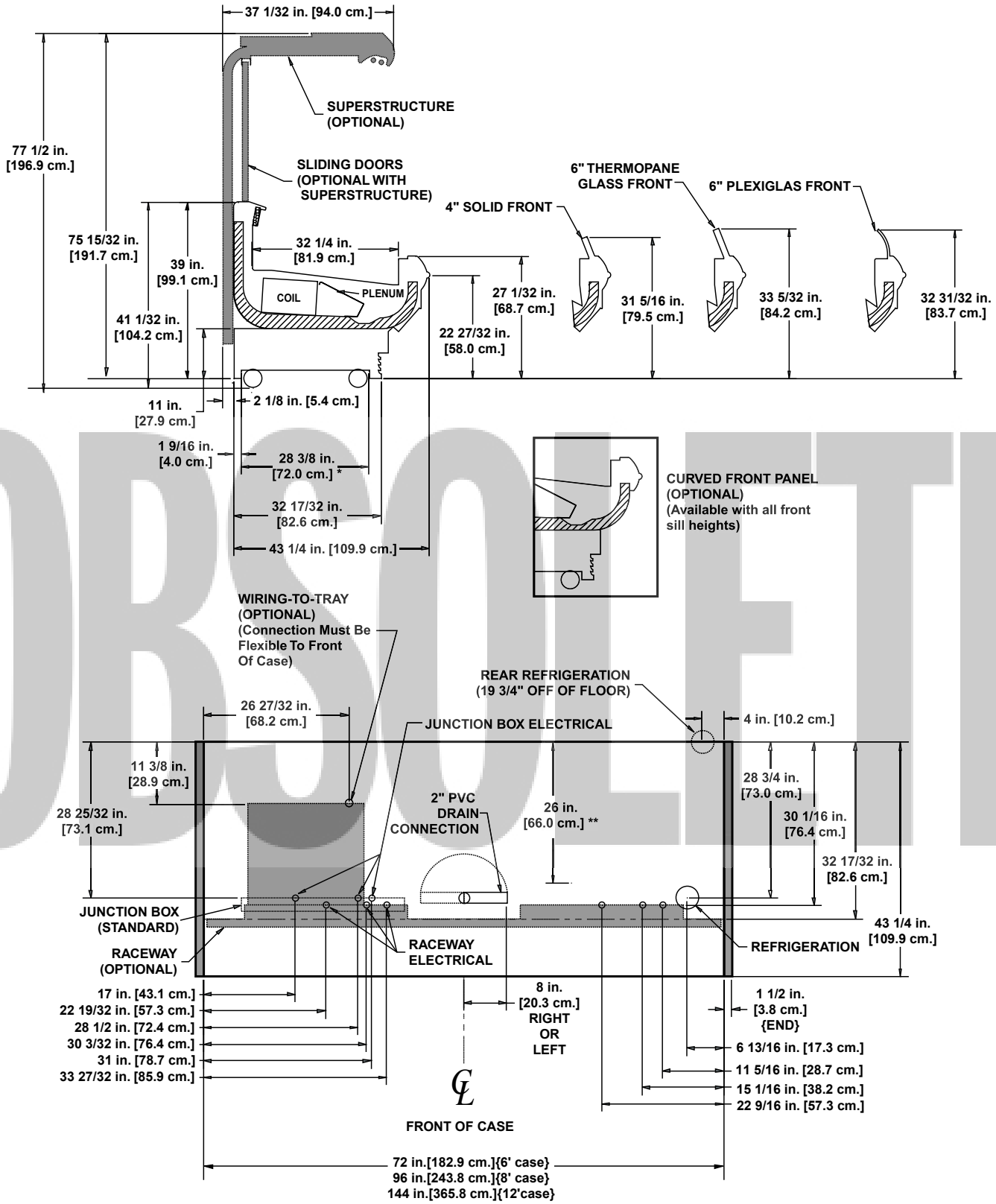

OBSOLETE

NOTES:

* STUB-UP AREA
** RECOMMENDED STUB-UP CENTERLINE FOR ELECTRICAL AND HUB DRAINS

- ENDS ADD APPROXIMATELY 1 INCH TO CASE HEIGHT
- A 2" MINIMUM AIR GAP IS REQUIRED BETWEEN THE REAR OF THE CASE AND A WALL
- SUCTION LINE - 7/8", LIQUID LINE - 5/8"

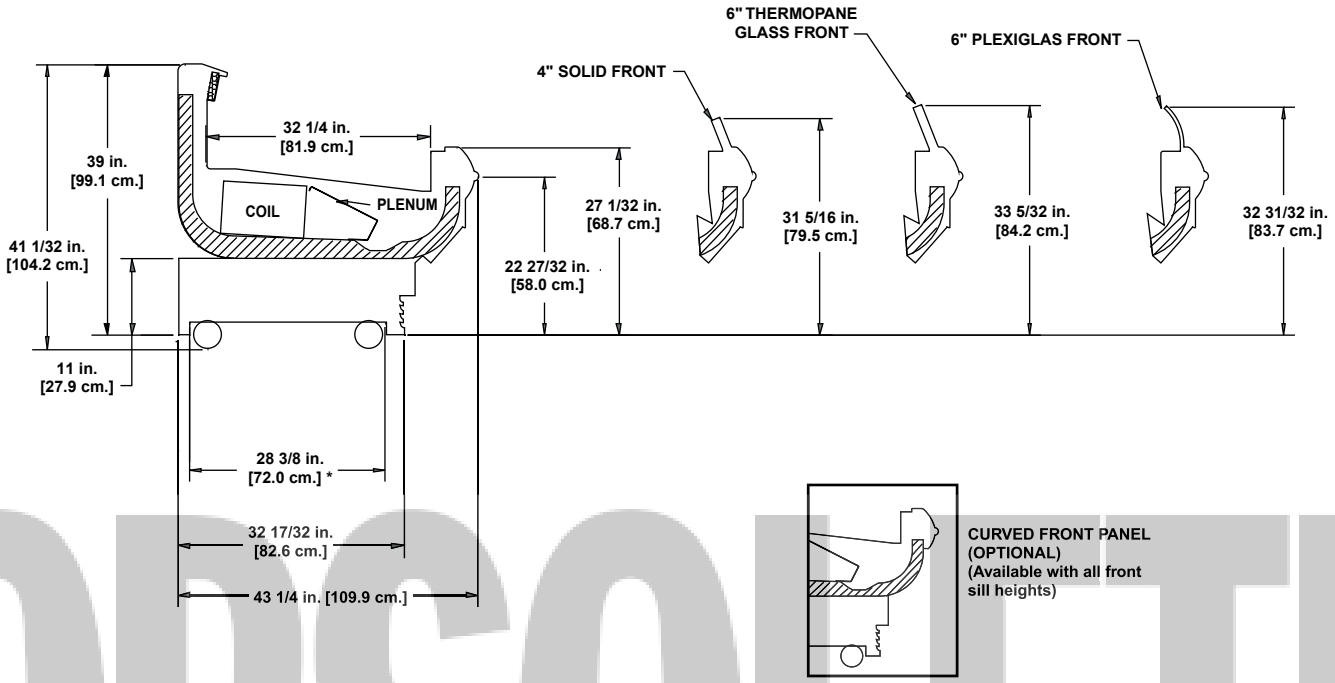

CURVED FRONT PANEL (OPTIONAL) (Available with all front sill heights)

OBSOLETE

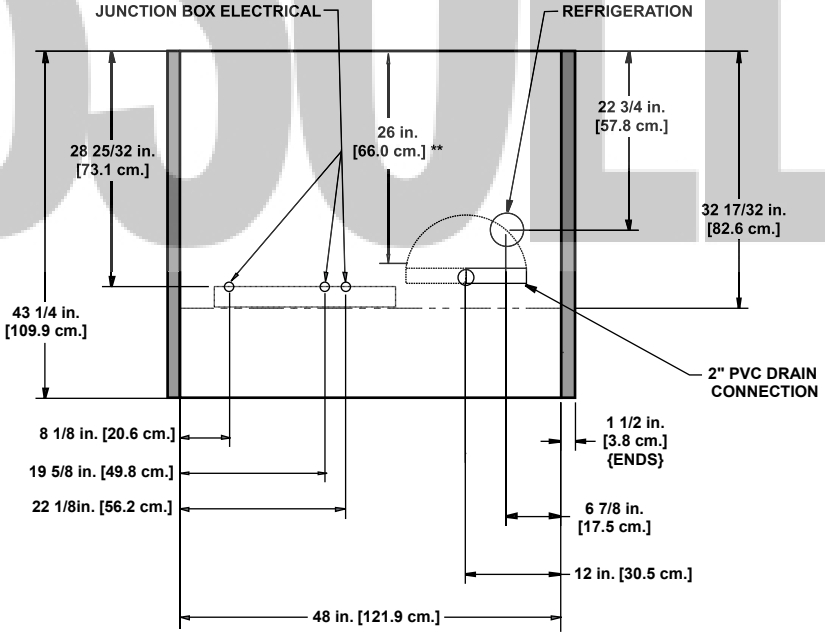

FRONT OF CASE

NOTES:

* STUB-UP AREA
** RECOMMENDED STUB-UP CENTERLINE FOR ELECTRICAL AND HUB DRAINS

- ENDS ADD APPROXIMATELY 1 INCH TO CASE HEIGHT
- A 2" MINIMUM AIR GAP IS REQUIRED BETWEEN THE REAR OF THE CASE AND A WALL
- BACK PANELS ADD APPROXIMATELY 1" TO THE REAR OF THE CASE
- SUCTION LINE - 7/8", LIQUID LINE - 5/8"

OBSOLETE

Single Deck Frozen Meat Merchandisers

OMZ - 6', 8', & 12' frozen meat

Electrical Data

Model		Fans per Case	Standard Fans 120 Volts Amps	Standard Fans 120 Volts Watts	High Efficiency Fans 120 Volts Amps	High Efficiency Fans 120 Volts Watts	Anti-Condensate Heaters 120 Volts Amps	Anti-Condensate Heaters 120 Volts Watts	Defrost Heaters 208 Volts Amps[1]	Defrost Heaters 208 Volts Watts	Defrost Heaters 240 Volts Amps[1]	Defrost Heaters 240 Volts Watts
OMZ	6'	2	1.00	60	0.64	34	0.90	108	5.00	1800	5.76	2394
	8'	3	1.50	90	0.96	51	0.96	115	6.66	2400	7.69	3195
	12'	4	2.00	120	1.28	69	1.83	220	7.99	2880	9.24	3840

1 NOTE: 3 phase load. Figures given in maximum amps per phase.

Lighting Data

Model		Typical per Light Row 120 Volts Amps	Typical per Light Row 120 Volts Watts	Maximum Lighting 120 Volts Amps	Maximum Lighting 120 Volts Watts
OMZ	6'	0.57	68	0.57	68
	8'	0.57	68	0.57	68
	12'	0.77	92	0.77	92

OBSOLETE

Guidelines & Control Settings

Model	Front Sill Heights	BTUH/ft[2]	Evaporator (°F)	Discharge Air (°F)	Average Product (°F)	Return Air (°F)	Discharge Air Velocity[3] (FPM)
OMZ	33"	550	-23	-10	4	0	120

2 BTUH's/ft listed are for parallel operation. Conventional ratings may be approximated by multiplying listed rating by 1.04.

3 Average discharge air velocity at peak of defrost.

Defrost Controls

Model	Defrosts Per Day	Electric Defrost Fail-safe (min)	Electric Defrost Termination Temp. (°F)	Timed Off Defrost Fail-safe (min)	Timed Off Defrost Termination Temp. (°F)	Hot Gas Defrost Fail-safe (min)	Hot Gas Defrost Termination Temp. (°F)	Reverse Air Defrost Fail-safe (min)	Reverse Air Defrost Termination Temp. (°F)
OMZ	4	45	47	- - -[4]	- - -	20	59	- - -	- - -

4 NOTE: - - - not an option on this case model.

Low Temperature Defrost Schedule

No. Per Day	Hours
1	10 pm
2	6 am - 10 pm**

** Or immediately after store closing hour

Hill PHOENIX EXCELLENCE™

A DOVER DIVERSIFIED COMPANY

All measurements are taken per CRMA specifications.

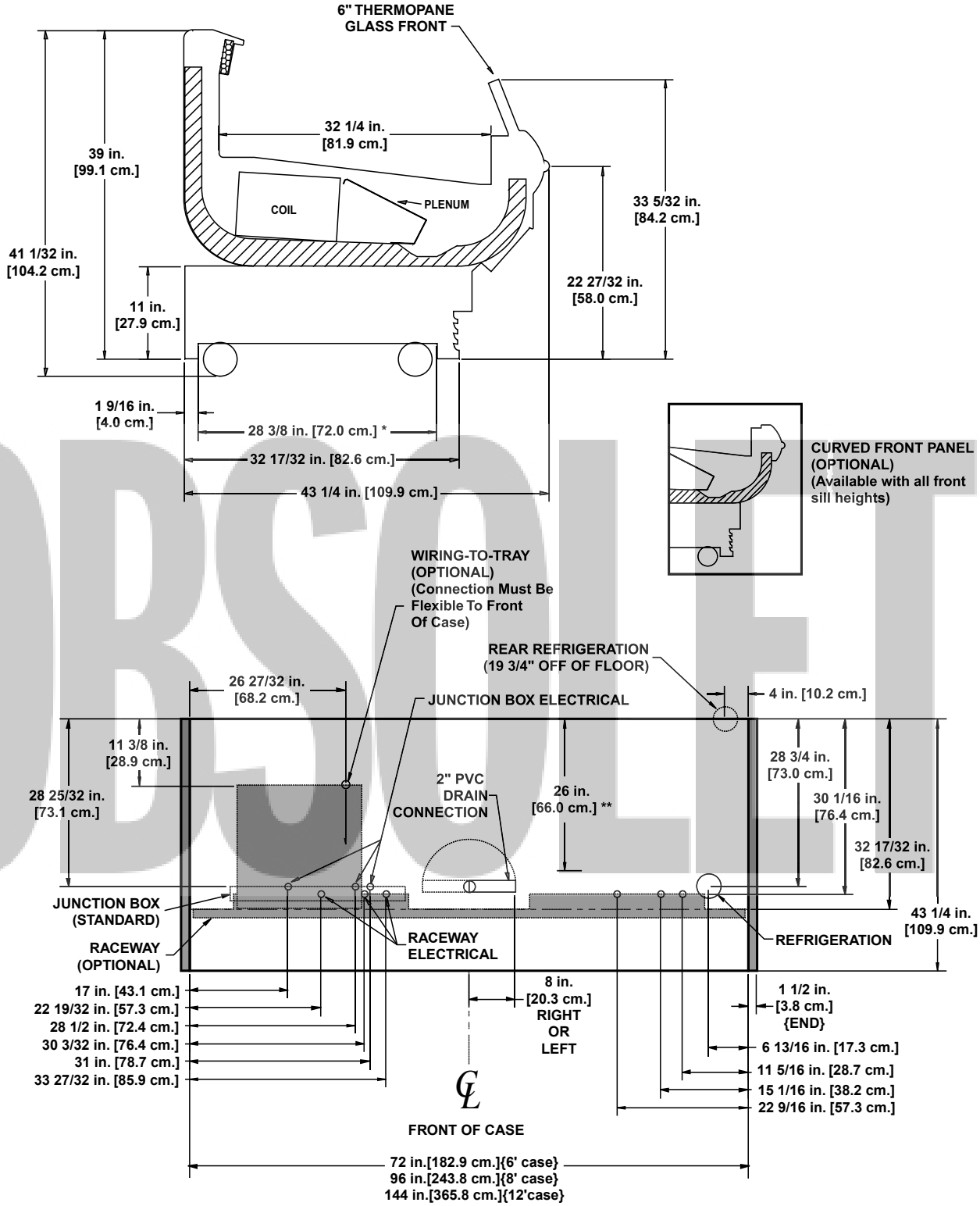

OBSOLETE

NOTES:

* STUB-UP AREA
** RECOMMENDED STUB-UP CENTERLINE FOR ELECTRICAL AND HUB DRAINS

- ENDS ADD APPROXIMATELY 1 INCH TO CASE HEIGHT
- A 2" MINIMUM AIR GAP IS REQUIRED BETWEEN THE REAR OF THE CASE AND A WALL
- SUCTION LINE - 7/8", LIQUID LINE - 5/8"

Single Deck Frozen Food/Ice Cream Merchandisers

OMZD - 6', 8', & 12' frozen food/ice cream

Electrical Data

Model		Fans per Case	Standard Fans 120 Volts Amps	Standard Fans 120 Volts Watts	High Efficiency Fans 120 Volts Amps	High Efficiency Fans 120 Volts Watts	Anti-Condensate Heaters 120 Volts Amps	Anti-Condensate Heaters 120 Volts Watts	Defrost Heaters 208 Volts Amps[1]	Defrost Heaters 208 Volts Watts	Defrost Heaters 240 Volts Amps[1]	Defrost Heaters 240 Volts Watts
OMZD	6'	2	0.68	34	0.30	22	1.39	167	5.00	1800	5.76	2394
	8'	3	1.02	51	0.45	33	1.90	228	6.66	2400	7.69	3195
	12'	4	1.36	68	0.60	44	2.81	337	7.99	2880	9.24	3840

1 NOTE: 3 phase load. Figures given in maximum amps per phase.

Lighting Data

Model		Typical per Light Row 120 Volts Amps	Typical per Light Row 120 Volts Watts	Maximum Lighting 120 Volts Amps	Maximum Lighting 120 Volts Watts
OMZD	6'	0.57	68	0.57	68
	8'	0.57	68	0.57	68
	12'	0.77	92	0.77	92

OBSOLETE

Guidelines & Control Settings

Model	BTUH/ft³	Evaporator (°F)	Discharge Air (°F)	Average Product (°F)	Return Air (°F)	Discharge Air Velocity[4] (FPM)
OMZD-F[2]	456	-18	-8	1	2	240
OMZD-C[2]	476	-28	-18	-8	-8	240

[2] F=frozen food, C=ice cream

[3] BTUH's/ft listed are for parallel operation. Conventional ratings may be approximated by multiplying listed rating by 1.04.

[4] Average discharge air velocity at peak of defrost.

Defrost Controls

Model	Defrosts Per Day	Electric Defrost Fail-safe (min)	Electric Defrost Termination Temp. (°F)	Timed Off Defrost Fail-safe (min)	Timed Off Defrost Termination Temp. (°F)	Hot Gas Defrost Fail-safe (min)	Hot Gas Defrost Termination Temp. (°F)	Reverse Air Defrost Fail-safe (min)	Reverse Air Defrost Termination Temp. (°F)
OMZD	1	45	48	- - -[5]	- - -	20	59	- - -	- - -

[5] NOTE: - - - not an option on this case model.

Low Temperature Defrost Schedule

No. Per Day	Hours
1	10 pm
2	6 am - 10 pm**

** Or immediately after store closing hour

Hill PHOENIX EXCELLENCE™

A DOVER DIVERSIFIED COMPANY

All measurements are taken per CRMA specifications.

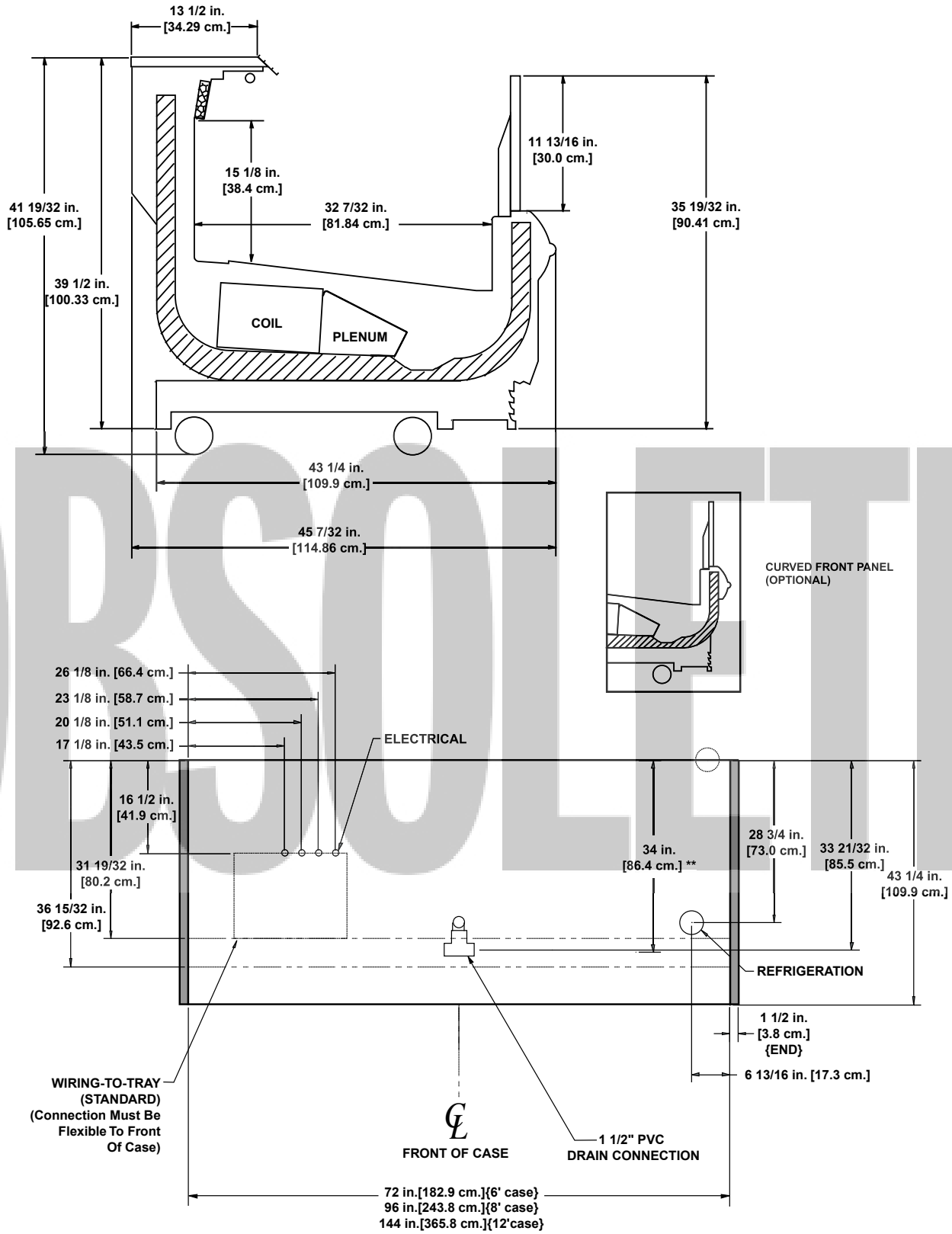

OBSOLETE

NOTES:

* STUB-UP AREA
** RECOMMENDED STUB-UP CENTERLINE FOR ELECTRICAL AND HUB DRAINS

- ENDS ADD APPROXIMATELY 1 INCH TO CASE HEIGHT
- A 2" MINIMUM AIR GAP IS REQUIRED BETWEEN THE REAR OF THE CASE AND A WALL
- BACK PANELS ADD APPROXIMATELY 1" TO THE REAR OF THE CASE
- SUCTION LINE - 7/8", LIQUID LINE - 5/8"

Single Deck Produce Merchandisers

OP - 4', 6', 8', & 12' produce

Electrical Data

Model		Fans per Case	Standard Fans 120 Volts Amps	Standard Fans 120 Volts Watts	High Efficiency Fans 120 Volts Amps	High Efficiency Fans 120 Volts Watts	Anti-Condensate Heaters[1] 120 Volts Amps	Anti-Condensate Heaters[1] 120 Volts Watts	Defrost Heaters 208 Volts Amps	Defrost Heaters 208 Volts Watts	Defrost Heaters 240 Volts Amps	Defrost Heaters 240 Volts Watts
OP	4'	2	1.00	60	0.60	40	- - -[1]	- - -	1.92	400	2.22	532
	6'	2	1.00	60	0.60	40	- - -	- - -	2.88	600	3.33	798
	8'	2	1.00	60	0.60	40	- - -	- - -	3.85	800	4.44	1065
	12'	3	1.50	90	0.90	60	- - -	- - -	5.77	1200	6.67	1600

[1] NOTE: - - - not an option on this case model.

Lighting Data

Model		Typical per Light Row 120 Volts Amps	Typical per Light Row 120 Volts Watts	Maximum Lighting 120 Volts Amps	Maximum Lighting 120 Volts Watts
OP	4'	0.57	68	0.57	68
	6'	0.57	68	0.57	68
	8'	0.57	68	0.57	68
	12'	0.77	92	0.77	92

OBSOLETE

Guidelines & Control Settings

Model	Rear Sill Heights	BTUH/ft[2]	Evaporator (°F)	Discharge Air (°F)	Average Product (°F)	Return Air (°F)	Discharge Air Velocity[3] (FPM)
OP Bulk Produce	39"	230	27	30	41	50	210
	43"	290	27	30	40	50	210
OP Cut Produce	39"	375	22	27	37	45	210
	43"	401	22	27	36	45	210

[2] BTUH's/ft listed are for parallel operation. Conventional ratings may be approximated by multiplying listed rating by 1.04.

[3] Average discharge air velocity at peak of defrost.

Defrost Controls

Model	Defrosts Per Day	Electric Defrost Fail-safe (min)	Electric Defrost Termination Temp. (°F)	Timed Off Defrost Fail-safe (min)	Timed Off Defrost Termination Temp. (°F)	Hot Gas Defrost Fail-safe (min)	Hot Gas Defrost Termination Temp. (°F)	Reverse Air Defrost Fail-safe (min)	Reverse Air Defrost Termination Temp. (°F)
OP	2	40	52	60	44	26	65	40	44

Medium Temperature Defrost Schedule

No. Per Day	Hours
1	12 midnight
2	12 am - 12 pm
3	6 am - 2 pm - 10 pm
4	12 - 6 am - 12 - 6 pm

All measurements are taken per CRMA specifications.

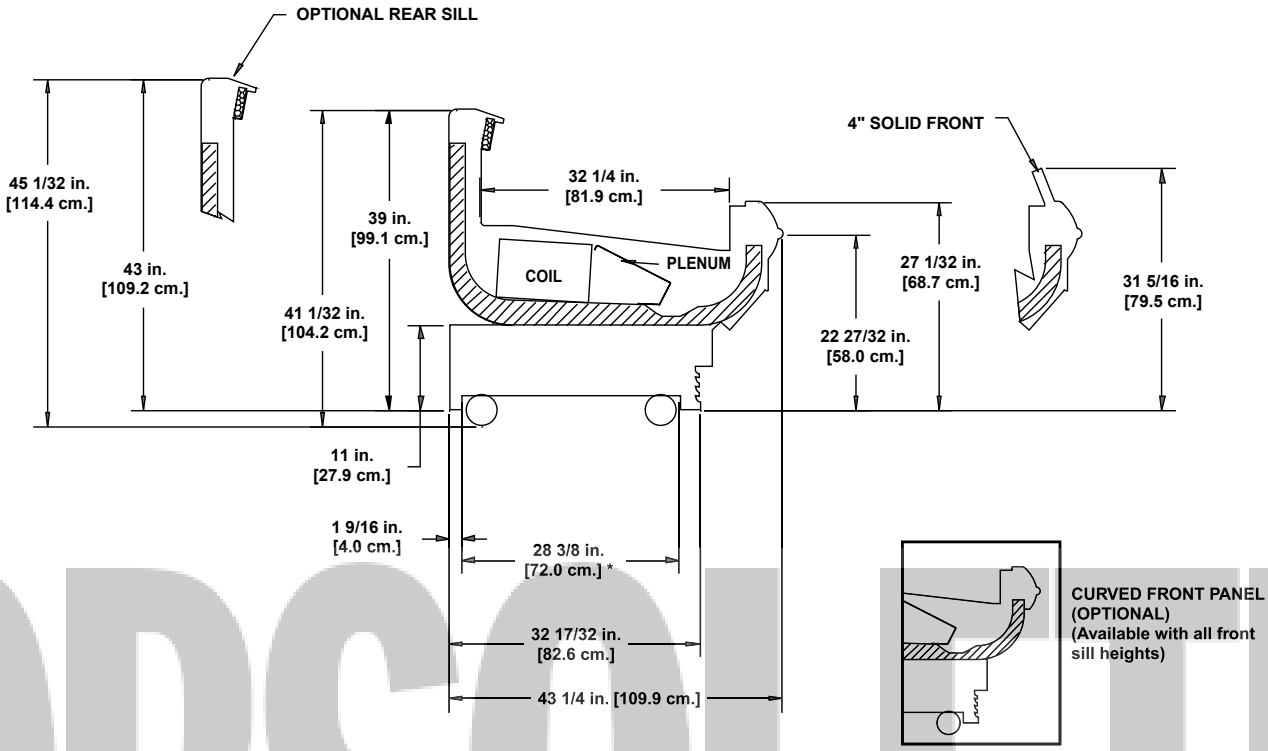

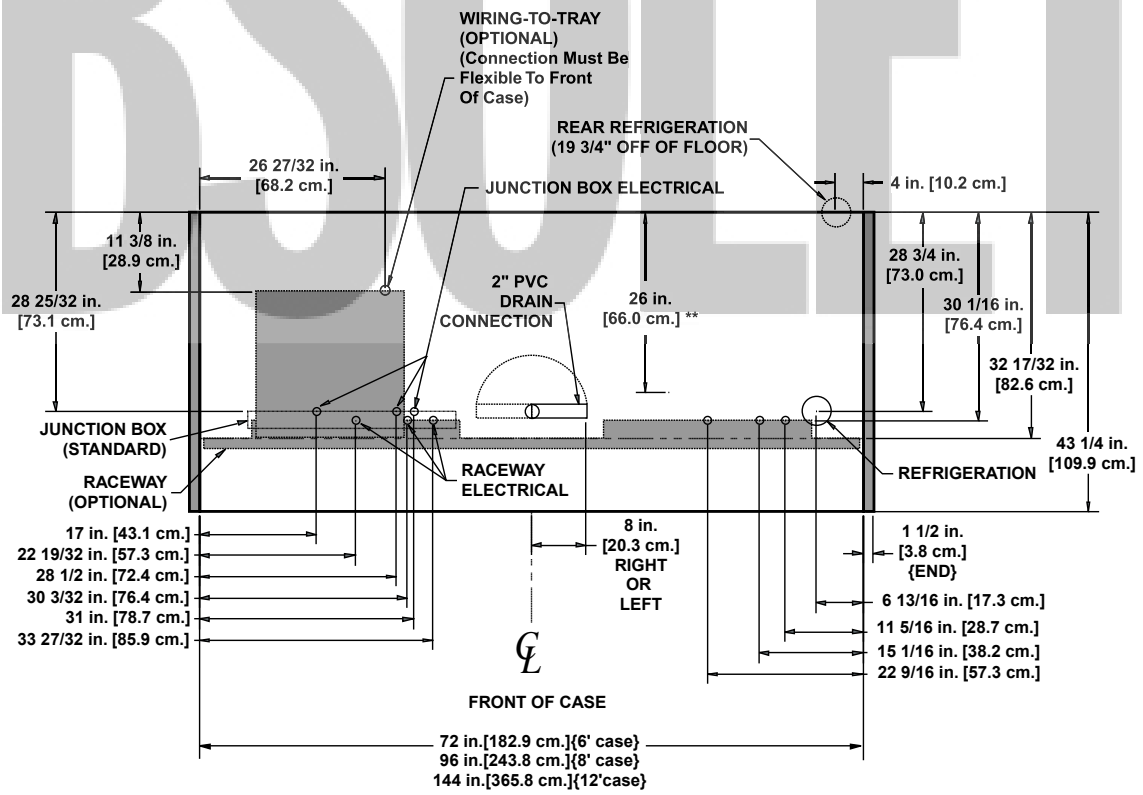

NOTES:

* STUB-UP AREA
** RECOMMENDED STUB-UP CENTERLINE FOR ELECTRICAL AND HUB DRAINS

- ENDS ADD APPROXIMATELY 1 INCH TO CASE HEIGHT
- A 2" MINIMUM AIR GAP IS REQUIRED BETWEEN THE REAR OF THE CASE AND A WALL
- SUCTION LINE - 7/8", LIQUID LINE - 5/8"

OBSOLETE

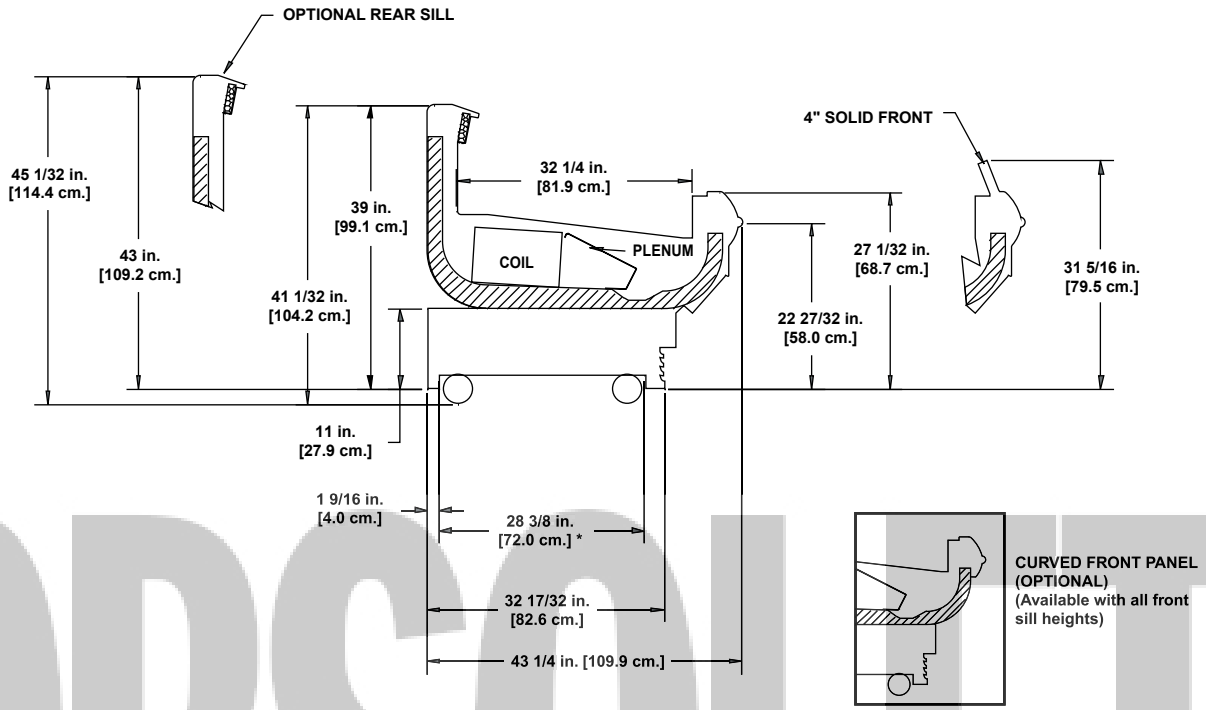

CURVED FRONT PANEL
(OPTIONAL)
(Available with all front
sill heights)

OBSOLETE

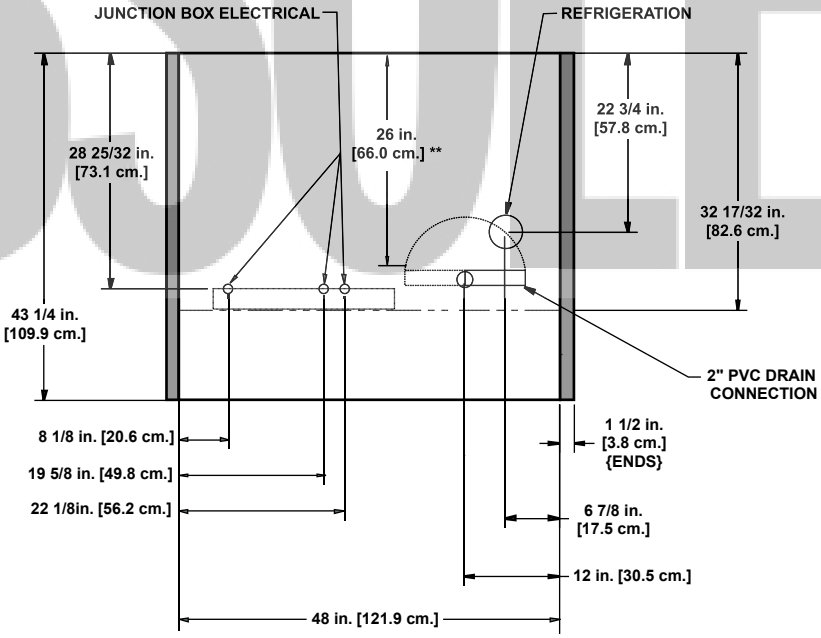

FRONT OF CASE

NOTES:

* STUB-UP AREA
** RECOMMENDED STUB-UP CENTERLINE FOR ELECTRICAL AND HUB DRAINS

- ENDS ADD APPROXIMATELY 1 INCH TO CASE HEIGHT
- A 2" MINIMUM AIR GAP IS REQUIRED BETWEEN THE REAR OF THE CASE AND A WALL
- BACK PANELS ADD APPROXIMATELY 1" TO THE REAR OF THE CASE
- SUCTION LINE - 7/8", LIQUID LINE - 5/8"

OBSOLETE

International Style Self-Service Deli/Seafood Merchandisers

OSIO - 4', 6', 8', & 12' international style self-service

Electrical Data

Model		Fans per Case	Standard Fans 120 Volts Amps	Standard Fans 120 Volts Watts	High Efficiency Fans 120 Volts Amps	High Efficiency Fans 120 Volts Watts	Anti-Condensate Heaters 120 Volts Amps	Anti-Condensate Heaters 120 Volts Watts	Defrost Heaters 208 Volts Amps	Defrost Heaters 208 Volts Watts	Defrost Heaters 240 Volts Amps	Defrost Heaters 240 Volts Watts
OSIO	4'	2	0.68	34	0.30	22	0.55	66	1.92	400	2.22	532
	6'	2	0.68	34	0.30	22	1.03	124	2.88	600	3.33	798
	8'	3	1.02	51	0.45	33	1.22	146	3.85	800	4.44	1065
	12'	4	1.36	68	0.60	44	1.88	226	5.77	1200	6.67	1600

Lighting Data

Model		Typical per Light Row 120 Volts Amps	Typical per Light Row 120 Volts Watts	Maximum Lighting 120 Volts Amps	Maximum Lighting 120 Volts Watts
OSIO	4'	0.57	68	0.57	68
	6'	0.57	68	0.57	68
	8'	0.57	68	0.57	68
	12'	0.77	92	0.77	92

OBSOLETE

Guidelines & Control Settings

Model	BTUH/ft[1]	Evaporator (°F)	Discharge Air (°F)	Average Product (°F)	Return Air (°F)	Discharge Air Velocity[2] (FPM)
OSIO	695[2]	12	24	33	33	180

[1] BTUH's/ft listed are for parallel operation. Conventional ratings may be approximated by multiplying listed rating by 1.04.

[2] Calculated from OSIOA data compressor tables

[3] Average discharge air velocity at peak of defrost.

Defrost Controls

Model	Defrosts Per Day	Electric Defrost Fail-safe (min)	Electric Defrost Termination Temp. (°F)	Timed Off Defrost Fail-safe (min)	Timed Off Defrost Termination Temp. (°F)	Hot Gas Defrost Fail-safe (min)	Hot Gas Defrost Termination Temp. (°F)	Reverse Air Defrost Fail-safe (min)	Reverse Air Defrost Termination Temp. (°F)
OSIO	3	35	50	55	50	- - -[4]	- - -	- - -	- - -

[4] NOTE: - - - not an option on this case model.

Medium Temperature Defrost Schedule

No. Per Day	Hours
1	12 midnight
2	12 am - 12 pm
3	6 am - 2 pm - 10 pm
4	12 - 6 am - 12 - 6 pm

All measurements are taken per CRMA specifications.

Hill PHOENIX EXCELLENCE™
A DOVER DIVERSIFIED COMPANY
5/99

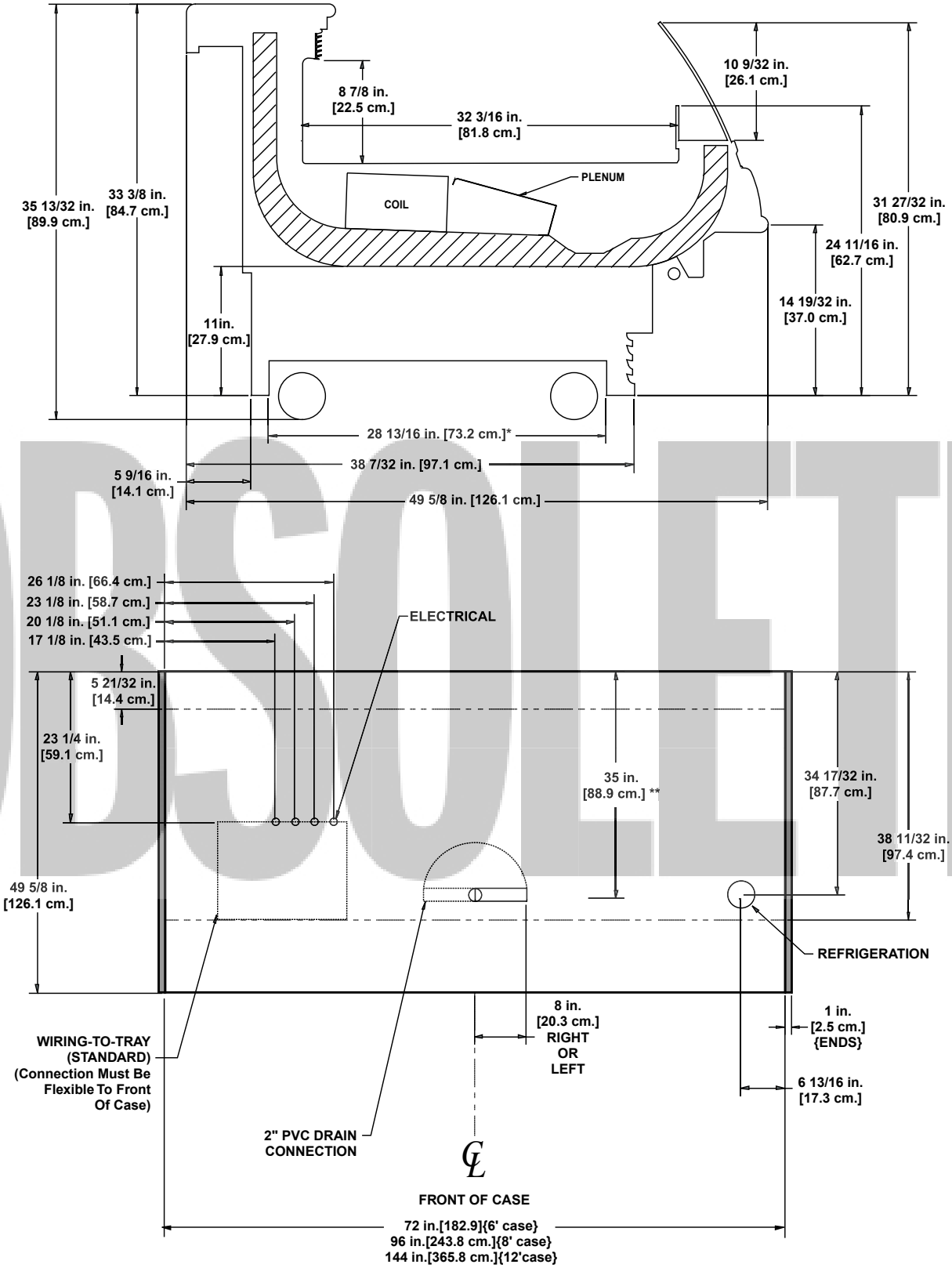

OBSOLETE

NOTES:

* STUB-UP AREA
** RECOMMENDED STUB-UP CENTERLINE FOR ELECTRICAL AND HUB DRAINS

• ENDS ADD APPROXIMATELY 1 INCH TO CASE HEIGHT

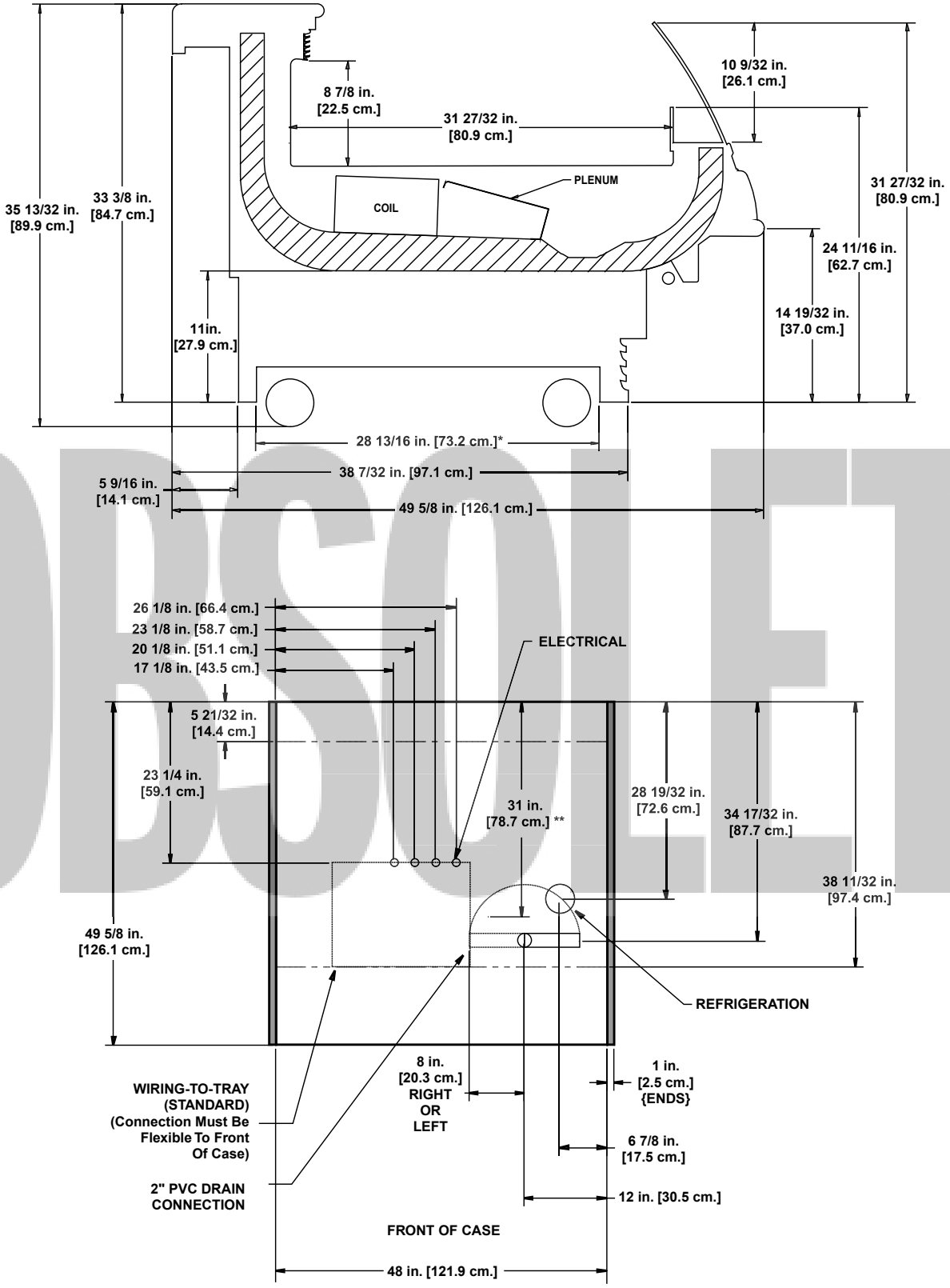

OBSOLETE

NOTES:

* STUB-UP AREA
** RECOMMENDED STUB-UP CENTERLINE FOR ELECTRICAL AND HUB DRAINS

• ENDS ADD APPROXIMATELY 1 INCH TO CASE HEIGHT

OBSOLETE

Wide International Style Self-Service Deli/Seafood Merchandisers

OWSIO - 6’, 8’, & 12’ international style self-service

Electrical Data

Model		Fans per Case	Standard Fans 120 Volts Amps	Standard Fans 120 Volts Watts	High Efficiency Fans 120 Volts Amps	High Efficiency Fans 120 Volts Watts	Anti-Condensate Heaters 120 Volts Amps	Anti-Condensate Heaters 120 Volts Watts	Defrost Heaters 208 Volts Amps	Defrost Heaters 208 Volts Watts	Defrost Heaters 240 Volts Amps	Defrost Heaters 240 Volts Watts
OWSIO	6’	2	0.68	34	0.30	22	1.03	124	2.88	600	3.33	798
	8’	3	1.02	51	0.45	33	1.22	146	3.85	800	4.44	1065
	12’	4	1.36	68	0.60	44	1.88	226	5.77	1200	6.67	1600

Lighting Data

Model		Typical per Light Row 120 Volts Amps	Typical per Light Row 120 Volts Watts	Maximum Lighting 120 Volts Amps	Maximum Lighting 120 Volts Watts
OWSIO	6’	0.57	68	0.57	68
	8’	0.57	68	0.57	68
	12’	0.77	92	0.77	92

OBSOLETE

Guidelines & Control Settings

Model	BTUH/ft[1]	Evaporator (°F)	Discharge Air (°F)	Average Product (°F)	Return Air (°F)	Discharge Air Velocity[2] (FPM)
OWSIO	795[2]	12	24	34	33	180

[1] BTUH's/ft listed are for parallel operation. Conventional ratings may be approximated by multiplying listed rating by 1.04.

[2] Calculated from OSIOA data compressor tables

[3] Average discharge air velocity at peak of defrost.

Defrost Controls

Model	Defrosts Per Day	Electric Defrost Fail-safe (min)	Electric Defrost Termination Temp. (°F)	Timed Off Defrost Fail-safe (min)	Timed Off Defrost Termination Temp. (°F)	Hot Gas Defrost Fail-safe (min)	Hot Gas Defrost Termination Temp. (°F)	Reverse Air Defrost Fail-safe (min)	Reverse Air Defrost Termination Temp. (°F)
OWSIO	3	35	50	55	50	- - -[4]	- - -	- - -	- - -

[4] NOTE: - - - not an option on this case model.

Medium Temperature Defrost Schedule

No. Per Day	Hours
1	12 midnight
2	12 am - 12 pm
3	6 am - 2 pm - 10 pm
4	12 - 6 am - 12 - 6 pm

All measurements are taken per CRMA specifications.

Hill PHOENIX™ EXCELLENCE

A DOVER DIVERSIFIED COMPANY

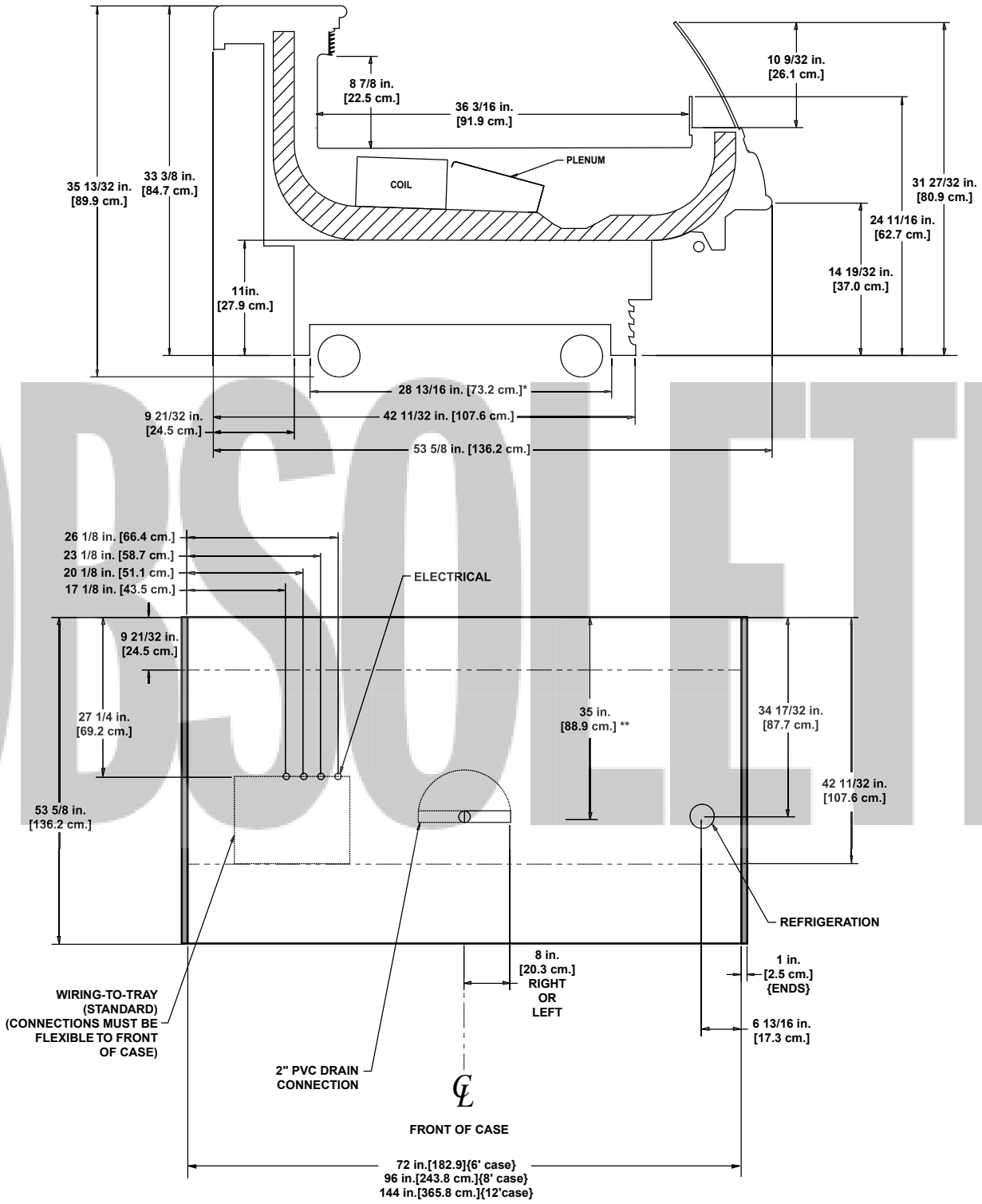

OBSOLETE

NOTES:

* STUB-UP AREA
** RECOMMENDED STUB-UP CENTERLINE FOR ELECTRICAL AND HUB DRAINS

• ENDS ADD APPROXIMATELY 1 INCH TO CASE HEIGHT

OBSOLETE

OBSOLETE

Multi-Deck Merchandisers

Notes:

- *Average product temperatures are calculated as defined by ASHRAE* standards and should not be used to determine application.*
- *Cases meet FDA** Food Code 1997 product temperature requirements (41°F or less) for hazardous foods when used for their prescribed applications.*
- *Allow for an extra 1/8" per joint when lining up merchandisers.*
- *Front sill height does not affect case performance unless specifically shown.*

* *American Society of Heating Refrigeration and Air Conditioning Engineers*

** *Food and Drug Administration*

Multi-Deck Dairy/Deli/Meat Merchandisers

O2UM - 4’, 6’, 8’, & 12’ low profile dairy/deli/meat

Electrical Data

Model		Fans per Case	Standard Fans 120 Volts Amps	Standard Fans 120 Volts Watts	High Efficiency Fans 120 Volts Amps	High Efficiency Fans 120 Volts Watts	Anti-Condensate Heaters[1] 120 Volts Amps	Anti-Condensate Heaters[1] 120 Volts Watts	Defrost Heaters 208 Volts Amps	Defrost Heaters 208 Volts Watts	Defrost Heaters 240 Volts Amps	Defrost Heaters 240 Volts Watts
O2UM	4’	2	1.00	60	0.60	40	0.14	17	1.90	400	2.22	532
	6’	2	1.00	60	0.60	40	0.20	24	2.88	600	3.33	798
	8’	3	1.50	90	0.90	60	0.25	30	3.85	800	4.44	1065
	12’	4	2.00	120	1.20	80	0.38	46	5.77	1200	6.67	1600

[1] Anti-condensate heater data for unlighted rear sill. For lighted rear sill, double the values.

Lighting Data

Model		Typical per Light Row 120 Volts Amps	Typical per Light Row 120 Volts Watts	Maximum Lighting 120 Volts Amps	Maximum Lighting 120 Volts Watts
O2UM	4’	0.57	68	1.14	137
	6’	0.57	68	2.06	247
	8’	0.57	68	2.06	247
	12’	0.77	92	3.08	370

OBSOLETE

Guidelines & Control Settings

Model[2]	Front Sill Heights	BTUH/ft[3]	Evaporator (°F)	Discharge Air (°F)	Average Product (°F)	Return Air (°F)	Discharge Air Velocity[4] (FPM)
O2UM	27”, 31”, 33”	1000	17	27	31	40	340

[2] Model O2UM only available for meat application with 33” front

[3] BTUH's/ft listed are for parallel operation. Conventional ratings may be approximated by multiplying listed rating by 1.04.

[4] Average discharge air velocity at peak of defrost.

Defrost Controls

Model	Defrosts Per Day	Electric Defrost Fail-safe (min)	Electric Defrost Termination Temp. (°F)	Timed Off Defrost Fail-safe (min)	Timed Off Defrost Termination Temp. (°F)	Hot Gas Defrost Fail-safe (min)	Hot Gas Defrost Termination Temp. (°F)	Reverse Air Defrost Fail-safe (min)	Reverse Air Defrost Termination Temp. (°F)
O2UM	3	40	47	45	45	26	39	45	45

Medium Temperature Defrost Schedule

No. Per Day	Hours
1	12 midnight
2	12 am - 12 pm
3	6 am - 2 pm - 10 pm
4	12 - 6 am - 12 - 6 pm

Hill PHOENIX™ EXCELLENCE

A DOVER DIVERSIFIED COMPANY

All measurements are taken per CRMA specifications.

O2UM
(11" BASEFRAME)

*(For additional rear sill options refer to the *Merchandisers Accessories Guide)*

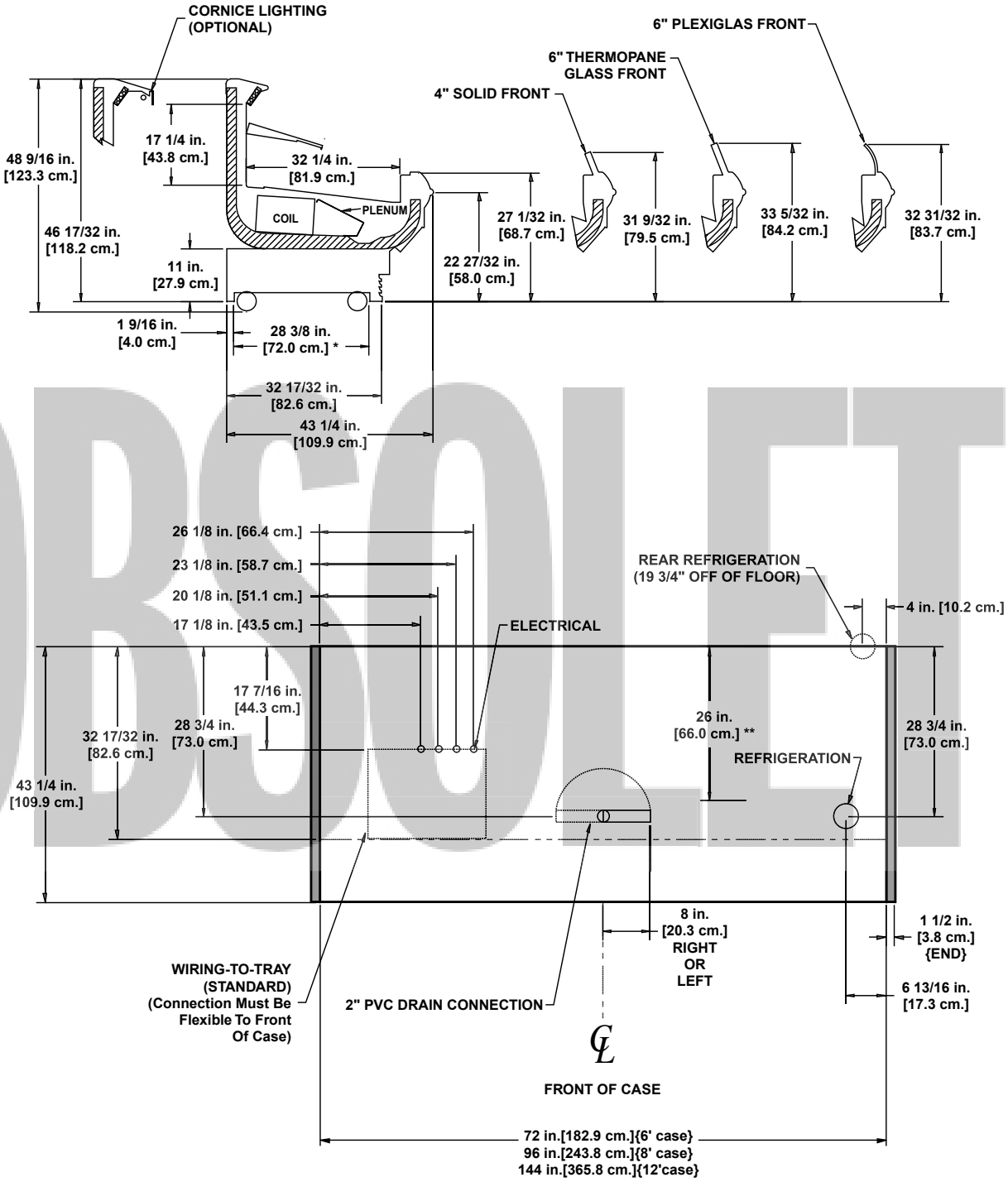

OBSOLETE

NOTES:

* STUB-UP AREA
** RECOMMENDED STUB-UP CENTERLINE FOR ELECTRICAL AND HUB DRAINS

- ENDS ADD APPROXIMATELY 1 INCH TO CASE HEIGHT
- A 2" MINIMUM AIR GAP IS REQUIRED BETWEEN THE REAR OF THE CASE AND A WALL
- BACK PANELS ADD APPROXIMATELY 1" TO THE REAR OF THE CASE
- SUCTION LINE - 7/8", LIQUID LINE - 5/8"

*(For additional rear sill options refer to the *Merchandisers Accessories Guide)*

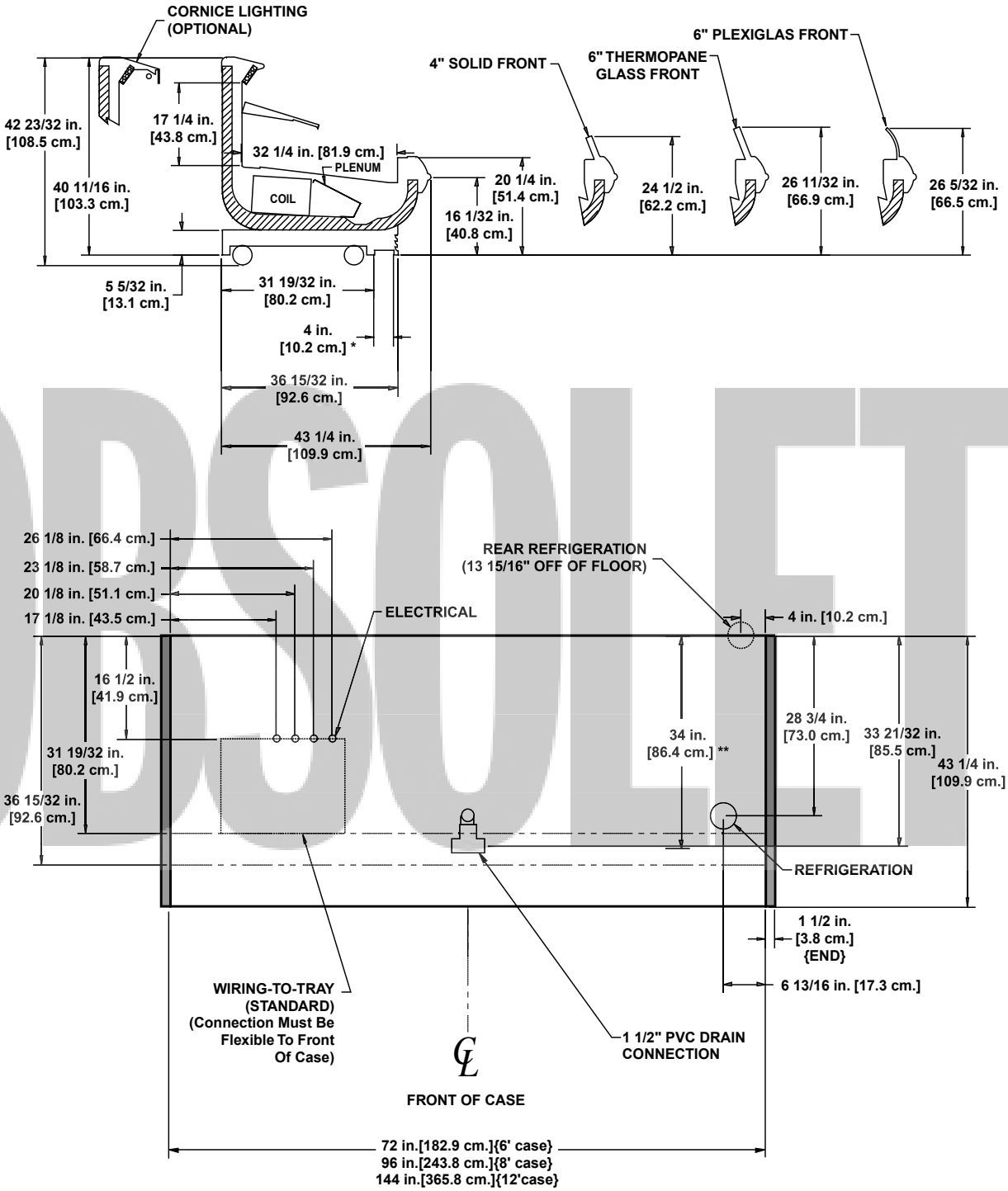

OBSOLETE

NOTES:

* STUB-UP AREA
** RECOMMENDED STUB-UP CENTERLINE FOR ELECTRICAL AND HUB DRAINS

- ENDS ADD APPROXIMATELY 1 INCH TO CASE HEIGHT
- A 2" MINIMUM AIR GAP IS REQUIRED BETWEEN THE REAR OF THE CASE AND A WALL
- BACK PANELS ADD APPROXIMATELY 1" TO THE REAR OF THE CASE
- SUCTION LINE - 7/8", LIQUID LINE - 5/8"

*(For additional rear sill options refer to the *Merchandisers Accessories Guide)*

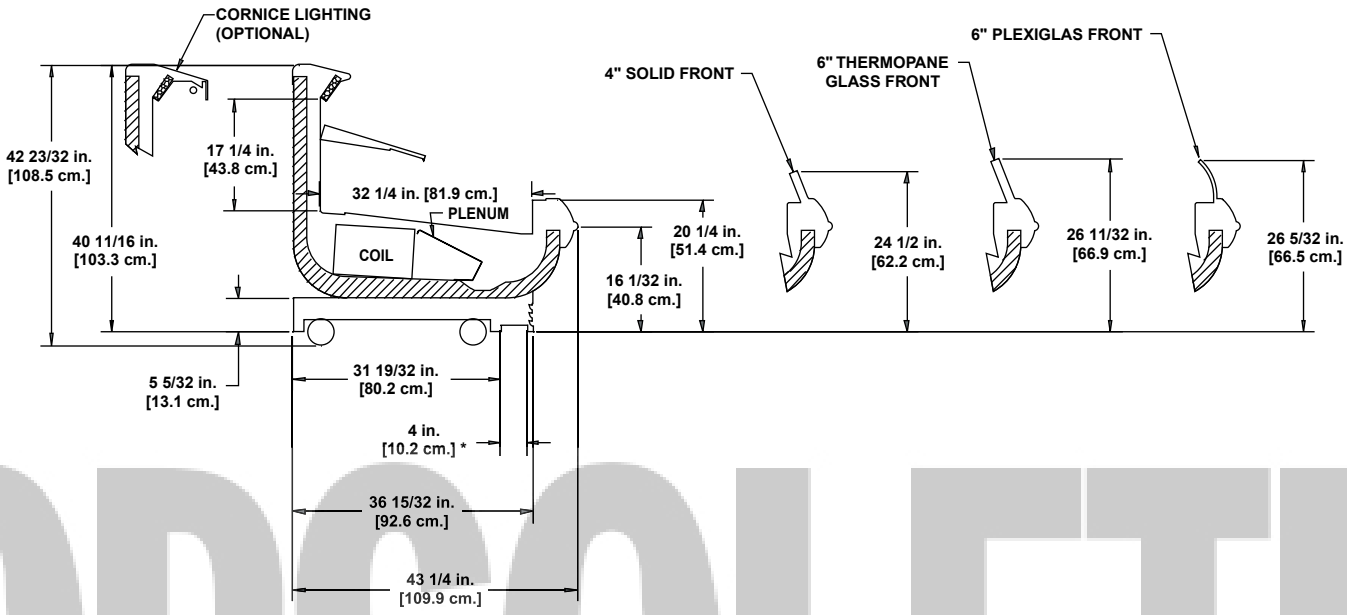

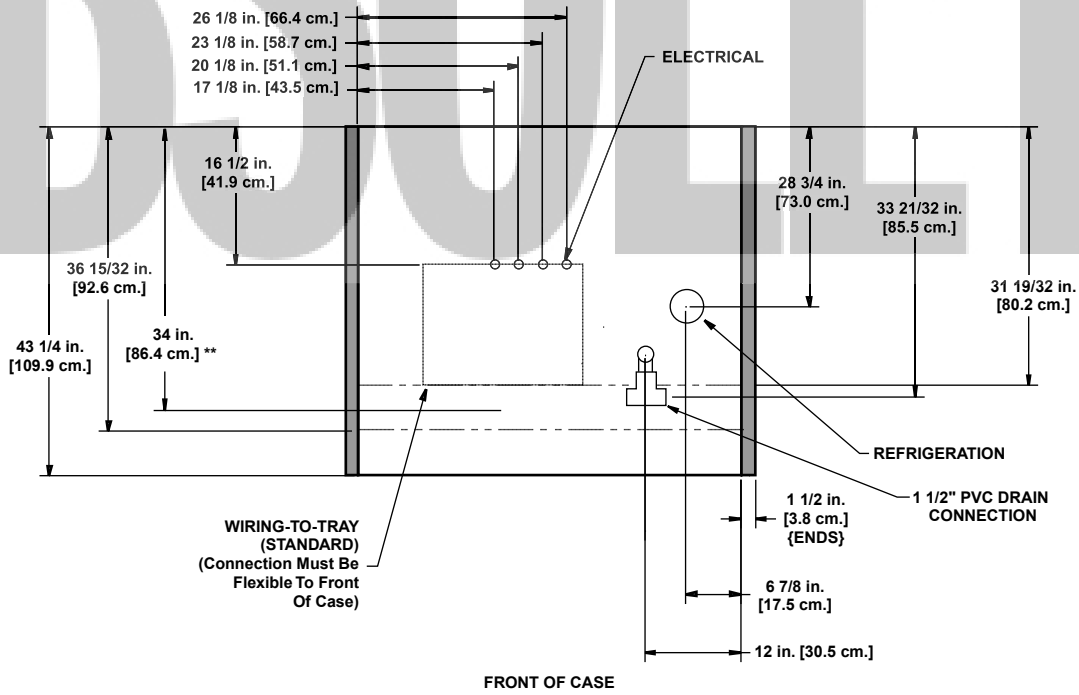

OBSOLETE

NOTES:

* STUB-UP AREA
** RECOMMENDED STUB-UP CENTERLINE FOR ELECTRICAL AND HUB DRAINS

- ENDS ADD APPROXIMATELY 1 INCH TO CASE HEIGHT
- A 2" MINIMUM AIR GAP IS REQUIRED BETWEEN THE REAR OF THE CASE AND A WALL
- BACK PANELS ADD APPROXIMATELY 1" TO THE REAR OF THE CASE
- SUCTION LINE - 7/8", LIQUID LINE - 5/8"

Multi-Deck Dairy/Deli/Meat Merchandisers

O2.5UM - 4’, 6’, 8’, & 12’ low profile dairy/deli/meat

Electrical Data

Model		Fans per Case	Standard Fans 120 Volts Amps	Standard Fans 120 Volts Watts	High Efficiency Fans 120 Volts Amps	High Efficiency Fans 120 Volts Watts	Anti-Condensate Heaters[1] 120 Volts Amps	Anti-Condensate Heaters[1] 120 Volts Watts	Defrost Heaters 208 Volts Amps	Defrost Heaters 208 Volts Watts	Defrost Heaters 240 Volts Amps	Defrost Heaters 240 Volts Watts
O2.5UM	4’	2	1.00	60	0.60	40	0.14	17	1.90	400	2.22	532
	6’	2	1.00	60	0.60	40	0.20	24	2.88	600	3.33	798
	8’	3	1.50	90	0.90	60	0.25	30	3.85	800	4.44	1065
	12’	4	2.00	120	1.20	80	0.38	46	5.77	1200	6.67	1600

[1] Anti-condensate heater data for unlighted rear sill. For lighted rear sill, double the values.

Lighting Data

Model		Typical per Light Row 120 Volts Amps	Typical per Light Row 120 Volts Watts	Maximum Lighting 120 Volts Amps	Maximum Lighting 120 Volts Watts
O2.5UM	4’	0.57	68	1.71	205
	6’	0.57	68	2.41	289
	8’	0.57	68	2.41	289
	12’	0.77	92	4.02	482

OBSOLETE

Guidelines & Control Settings

Model[2]	Front Sill Heights	BTUH/ft[3]	Evaporator (°F)	Discharge Air (°F)	Average Product (°F)	Return Air (°F)	Discharge Air Velocity[4] (FPM)
O2.5UM	27”, 31”, 33”	1020	17	27	33	45	225
O2.5UM w/Plexi Dome	27”, 31”, 33”	1380	17	32	36	46	305

[2] Model O2.5UM only available for meat application with 33” front

[3] BTUH's/ft listed are for parallel operation. Conventional ratings may be approximated by multiplying listed rating by 1.04.

[4] Average discharge air velocity at peak of defrost.

Defrost Controls

Model	Defrosts Per Day	Electric Defrost Fail-safe (min)	Electric Defrost Termination Temp. (°F)	Timed Off Defrost Fail-safe (min)	Timed Off Defrost Termination Temp. (°F)	Hot Gas Defrost Fail-safe (min)	Hot Gas Defrost Termination Temp. (°F)	Reverse Air Defrost Fail-safe (min)	Reverse Air Defrost Termination Temp. (°F)
O2.5UM	3	40	47	45	45	26	39	45	45

Medium Temperature Defrost Schedule

No. Per Day	Hours
1	12 midnight
2	12 am - 12 pm
3	6 am - 2 pm - 10 pm
4	12 - 6 am - 12 - 6 pm

Hill PHOENIX™ EXCELLENCE

A DOVER DIVERSIFIED COMPANY

All measurements are taken per CRMA specifications.

*(For additional rear sill options refer to the *Merchandisers Accessories Guide)*

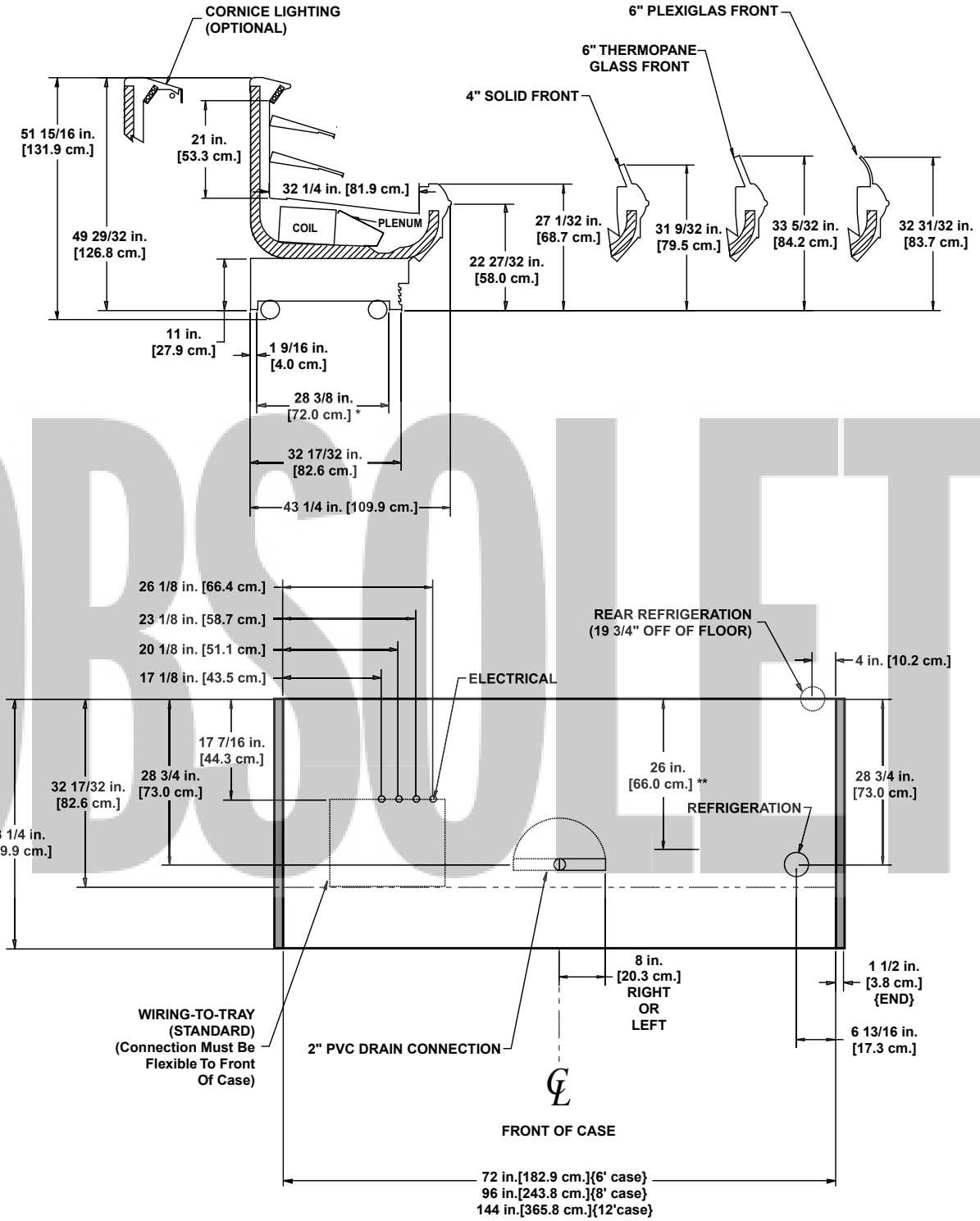

OBSOLETE

NOTES:

* STUB-UP AREA
** RECOMMENDED STUB-UP CENTERLINE FOR ELECTRICAL AND HUB DRAINS

- ENDS ADD APPROXIMATELY 1 INCH TO CASE HEIGHT
- A 2" MINIMUM AIR GAP IS REQUIRED BETWEEN THE REAR OF THE CASE AND A WALL
- BACK PANELS ADD APPROXIMATELY 1" TO THE REAR OF THE CASE
- SUCTION LINE - 7/8", LIQUID LINE - 5/8"

*(For additional rear sill options refer to the *Merchandisers Accessories Guide)*

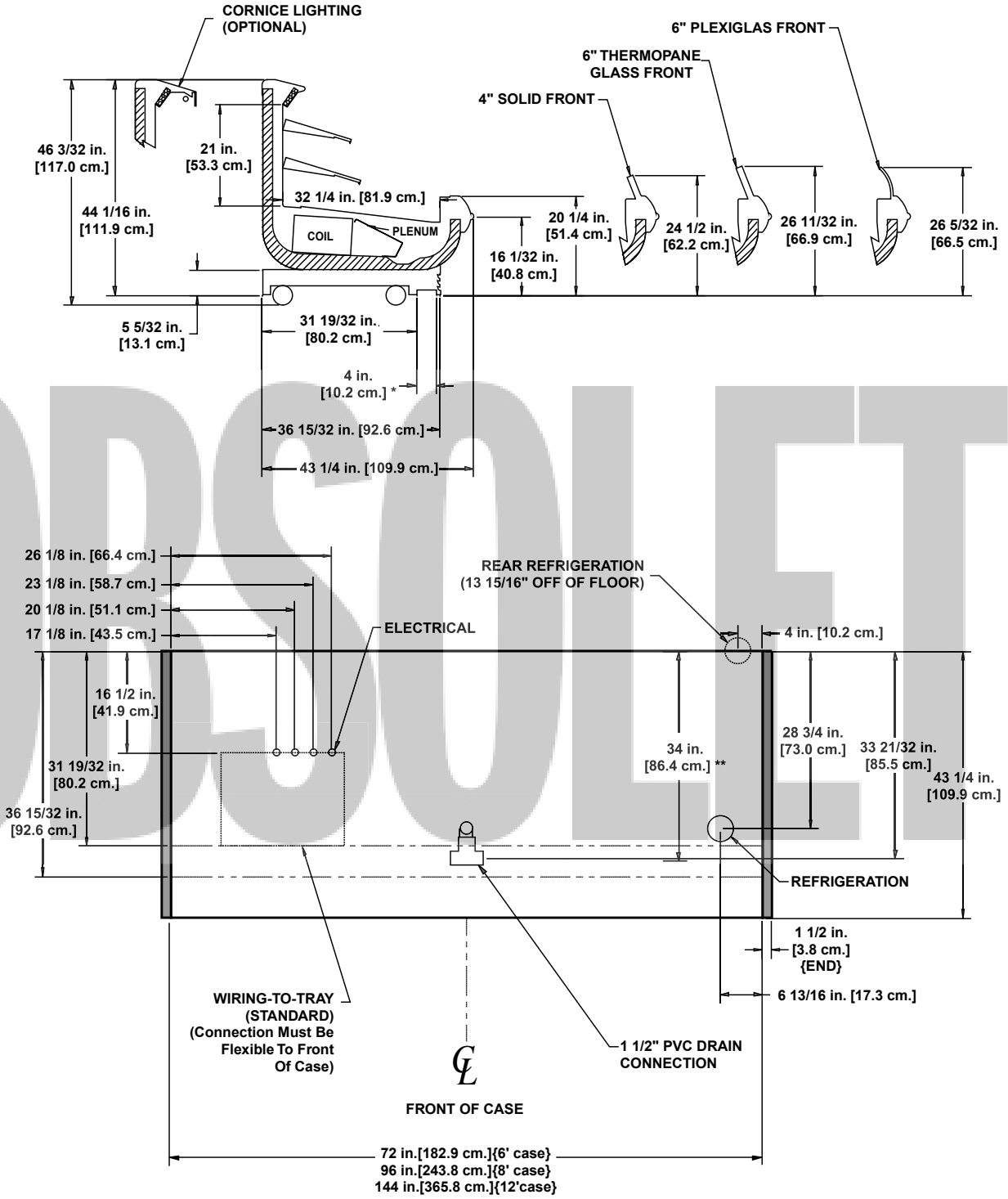

OBSOLETE

NOTES:

* STUB-UP AREA
** RECOMMENDED STUB-UP CENTERLINE FOR ELECTRICAL AND HUB DRAINS

- ENDS ADD APPROXIMATELY 1 INCH TO CASE HEIGHT
- A 2" MINIMUM AIR GAP IS REQUIRED BETWEEN THE REAR OF THE CASE AND A WALL
- BACK PANELS ADD APPROXIMATELY 1" TO THE REAR OF THE CASE
- SUCTION LINE - 7/8", LIQUID LINE - 5/8"

*(For additional rear sill options refer to the *Merchandisers Accessories Guide)*

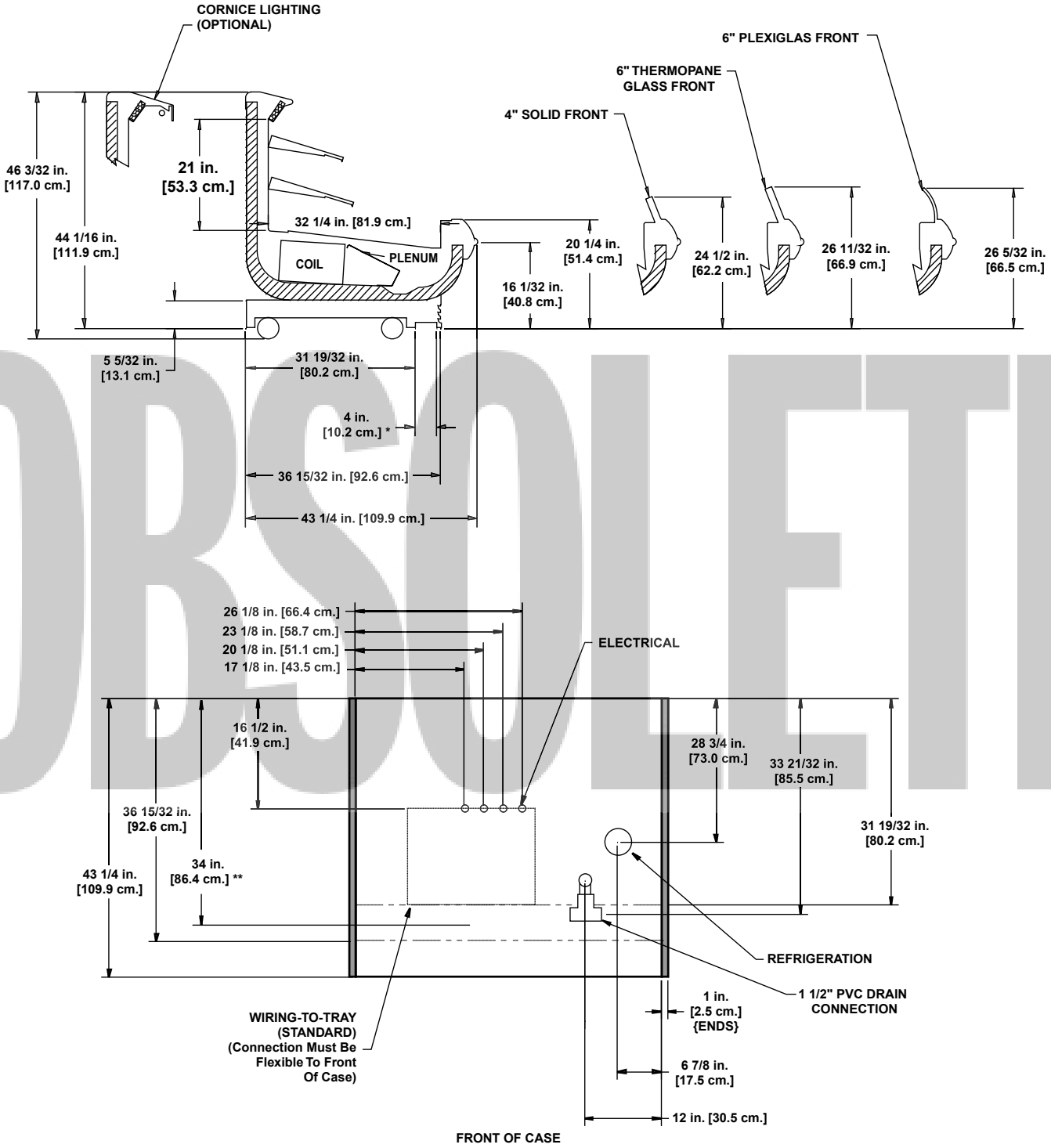

OBSOLETE

NOTES:

* STUB-UP AREA
** RECOMMENDED STUB-UP CENTERLINE FOR ELECTRICAL AND HUB DRAINS

- ENDS ADD APPROXIMATELY 1 INCH TO CASE HEIGHT
- A 2" MINIMUM AIR GAP IS REQUIRED BETWEEN THE REAR OF THE CASE AND A WALL
- BACK PANELS ADD APPROXIMATELY 1" TO THE REAR OF THE CASE
- SUCTION LINE - 7/8", LIQUID LINE - 5/8"

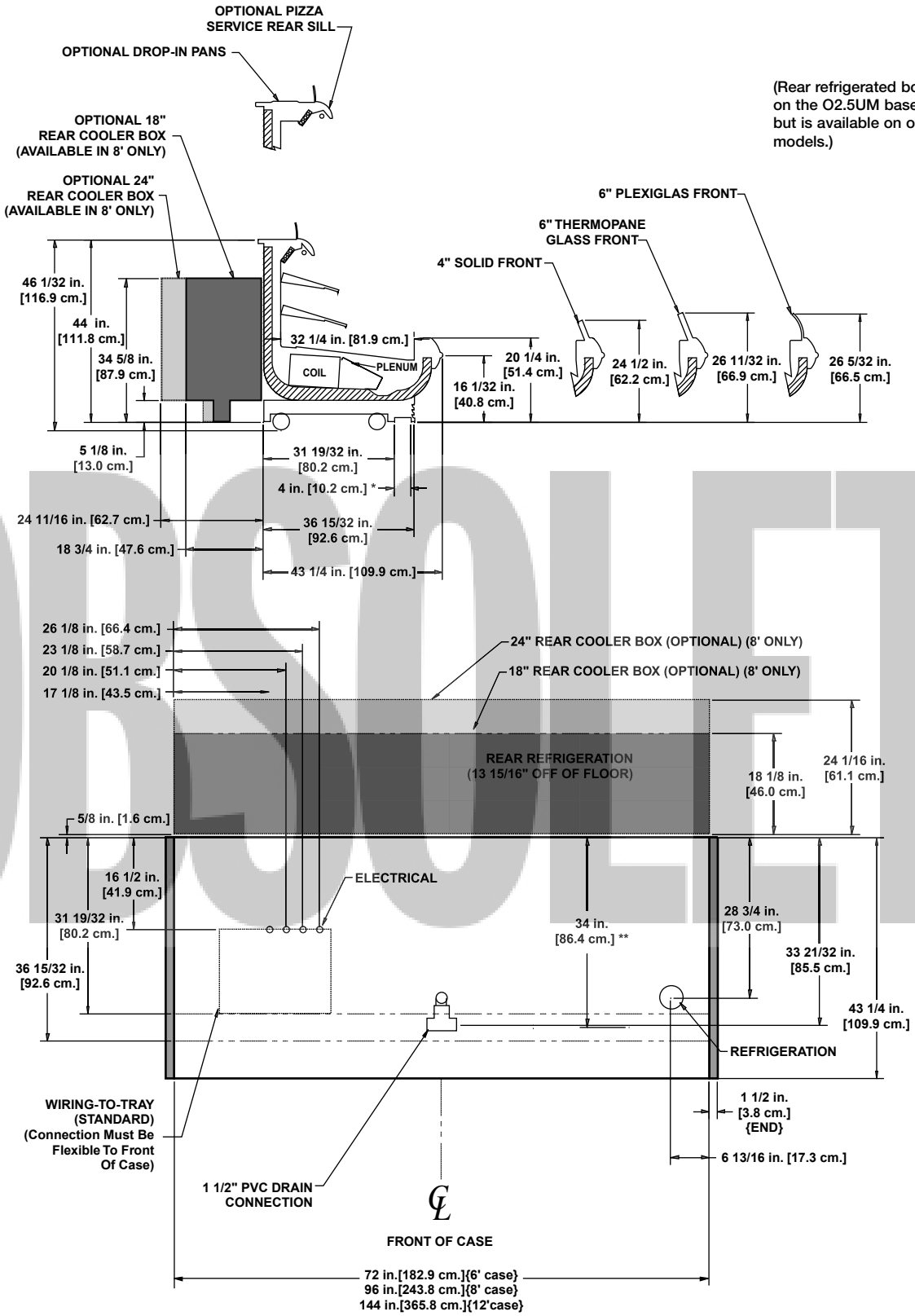

(Rear refrigerated box shown on the O2.5UM base model but is available on other OUM models.)

OBSOLETE

NOTES:

* STUB-UP AREA
** RECOMMENDED STUB-UP CENTERLINE FOR ELECTRICAL AND HUB DRAINS

- ENDS ADD APPROXIMATELY 1 INCH TO CASE HEIGHT
- A 2" MINIMUM AIR GAP IS REQUIRED BETWEEN THE REAR OF THE CASE AND A WALL
- BACK PANELS ADD APPROXIMATELY 1" TO THE REAR OF THE CASE
- SUCTION LINE - 7/8", LIQUID LINE - 5/8"

O2.5UM

w/ Plexiglas Dome

*(For additional rear sill options refer to the *Merchandisers Accessories Guide)*

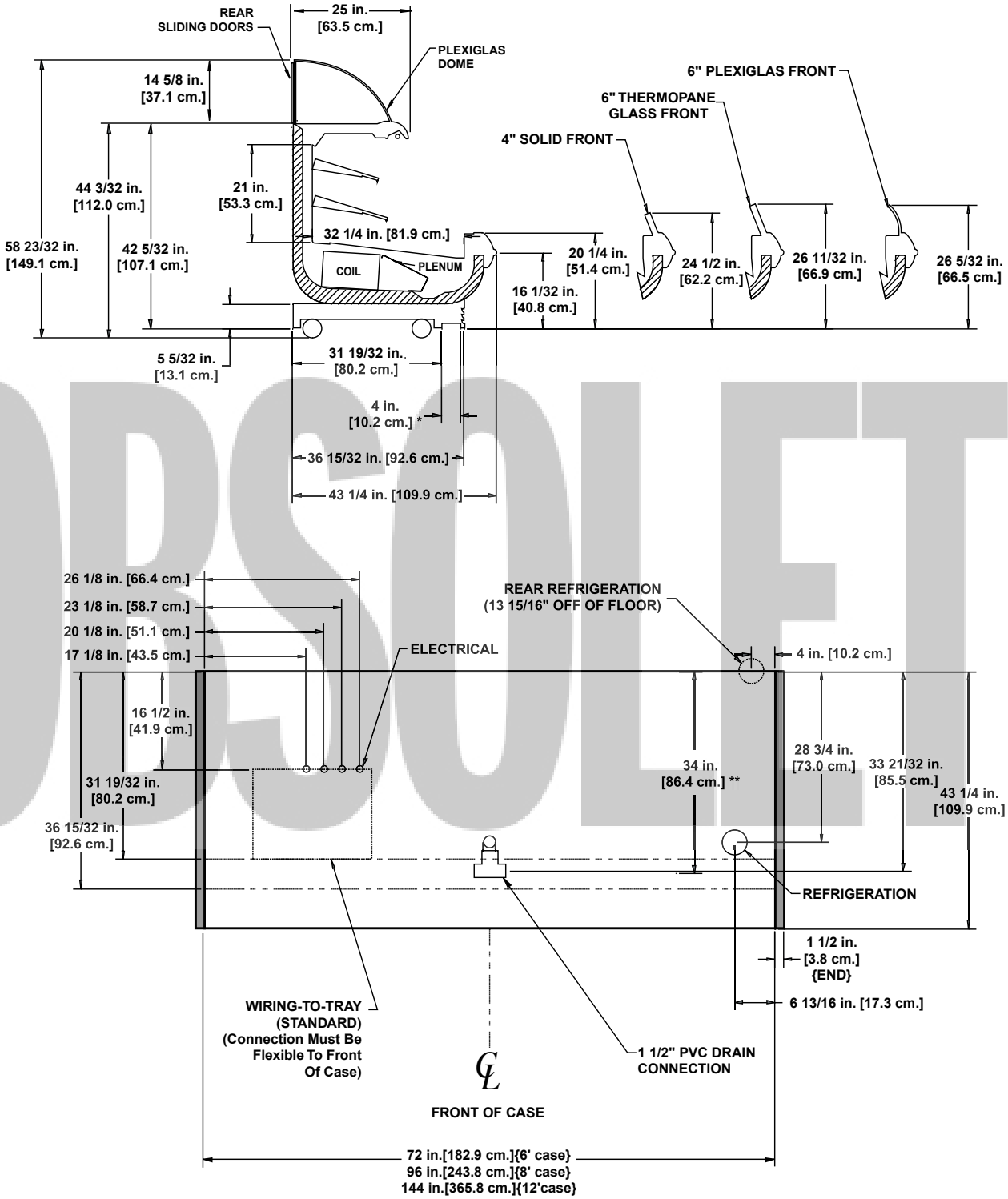

OBSOLETE

NOTES:

* STUB-UP AREA
** RECOMMENDED STUB-UP CENTERLINE FOR ELECTRICAL AND HUB DRAINS

- ENDS ADD APPROXIMATELY 1 INCH TO CASE HEIGHT
- A 2" MINIMUM AIR GAP IS REQUIRED BETWEEN THE REAR OF THE CASE AND A WALL
- BACK PANELS ADD APPROXIMATELY 1" TO THE REAR OF THE CASE
- SUCTION LINE - 7/8", LIQUID LINE - 5/8"

Multi-Deck Dairy/Deli/Meat Merchandisers

O3UM - 4', 6', 8', & 12' low profile dairy/deli/meat

Electrical Data

Model		Fans per Case	Standard Fans 120 Volts Amps	Standard Fans 120 Volts Watts	High Efficiency Fans 120 Volts Amps	High Efficiency Fans 120 Volts Watts	Anti-Condensate Heaters[1] 120 Volts Amps	Anti-Condensate Heaters[1] 120 Volts Watts	Defrost Heaters 208 Volts Amps	Defrost Heaters 208 Volts Watts	Defrost Heaters 240 Volts Amps	Defrost Heaters 240 Volts Watts
O3UM	4'	2	1.00	60	0.60	40	0.14	17	1.90	400	2.22	532
	6'	2	1.00	60	0.60	40	0.20	24	2.88	600	3.33	798
	8'	3	1.50	90	0.90	60	0.25	30	3.85	800	4.44	1065
	12'	4	2.00	120	1.20	80	0.38	46	5.77	1200	6.67	1600

[1] Anti-condensate heater data for unlighted rear sill. For lighted rear sill, double the values.

Lighting Data

Model		Typical per Light Row 120 Volts Amps	Typical per Light Row 120 Volts Watts	Maximum Lighting 120 Volts Amps	Maximum Lighting 120 Volts Watts
O3UM	4'	0.57	68	1.71	205
	6'	0.57	68	2.41	289
	8'	0.57	68	2.41	289
	12'	0.77	92	4.02	482

OBSOLETE

Guidelines & Control Settings

Model[2]	Front Sill Heights	BTUH/ft³[3]	Evaporator (°F)	Discharge Air (°F)	Average Product (°F)	Return Air (°F)	Discharge Air Velocity[4] (FPM)
O3UM	27", 31", 33"	1030	17	27	32	45	225

[2] Model O3UM only available for meat application with 33" front

[3] BTUH's/ft listed are for parallel operation. Conventional ratings may be approximated by multiplying listed rating by 1.04.

[4] Average discharge air velocity at peak of defrost.

Defrost Controls

Model	Defrosts Per Day	Electric Defrost Fail-safe (min)	Electric Defrost Termination Temp. (°F)	Timed Off Defrost Fail-safe (min)	Timed Off Defrost Termination Temp. (°F)	Hot Gas Defrost Fail-safe (min)	Hot Gas Defrost Termination Temp. (°F)	Reverse Air Defrost Fail-safe (min)	Reverse Air Defrost Termination Temp. (°F)
O3UM	3	40	47	45	45	26	39	45	45

Medium Temperature Defrost Schedule

No. Per Day	Hours
1	12 midnight
2	12 am - 12 pm
3	6 am - 2 pm - 10 pm
4	12 - 6 am - 12 - 6 pm

Hill PHOENIX™ EXCELLENCE

A DOVER DIVERSIFIED COMPANY

All measurements are taken per CRMA specifications.

O3UM
(11" BASEFRAME)

*(For additional rear sill options refer to the *Merchandisers Accessories Guide)*

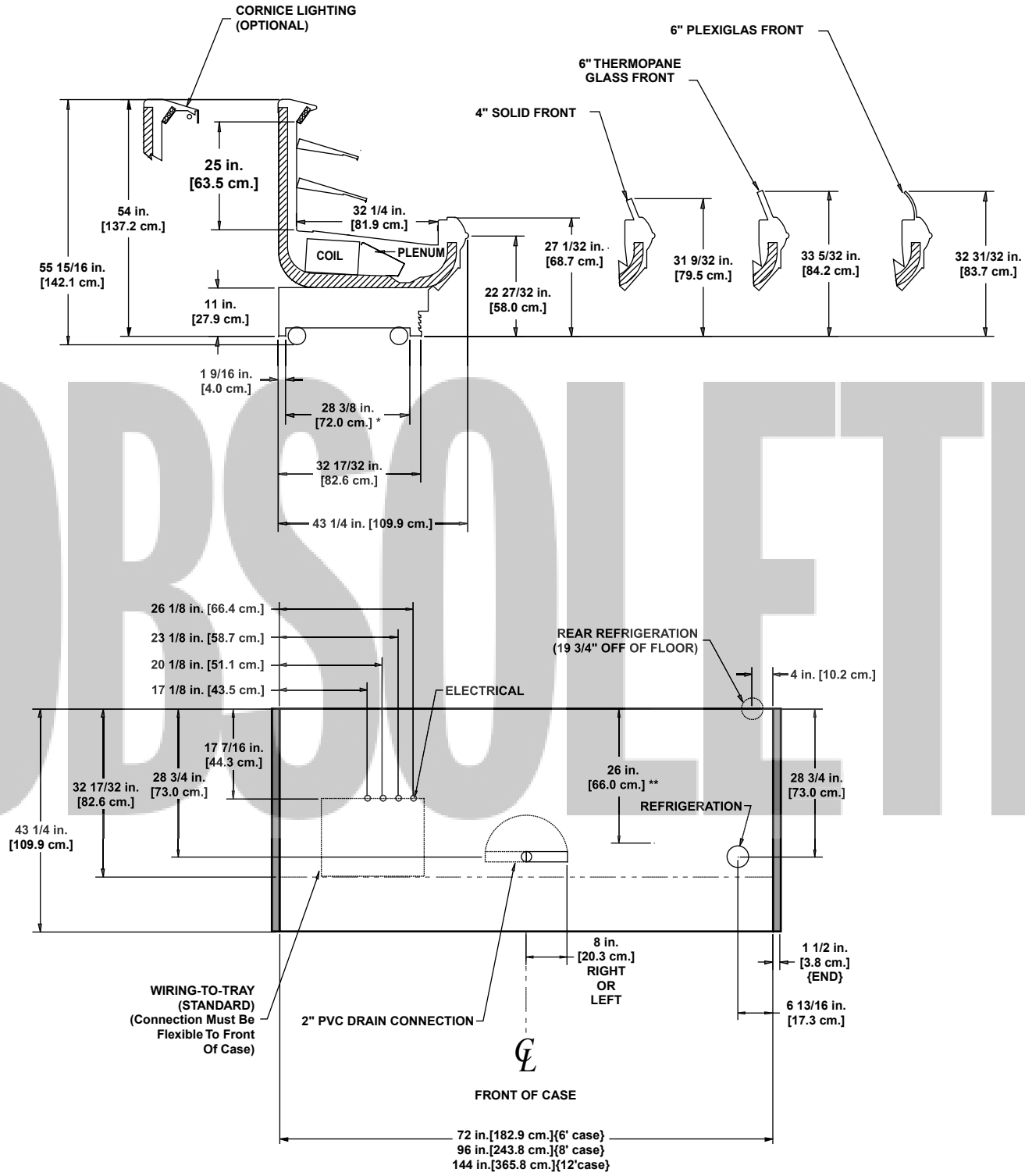

OBSOLETE

NOTES:

* STUB-UP AREA
** RECOMMENDED STUB-UP CENTERLINE FOR ELECTRICAL AND HUB DRAINS

- ENDS ADD APPROXIMATELY 1 INCH TO CASE HEIGHT
- A 2" MINIMUM AIR GAP IS REQUIRED BETWEEN THE REAR OF THE CASE AND A WALL
- BACK PANELS ADD APPROXIMATELY 1" TO THE REAR OF THE CASE
- SUCTION LINE - 7/8", LIQUID LINE - 5/8"

Hill PHOENIX EXCELLENCE™

(5 5/32" BASEFRAME)

*(For additional rear sill options refer to the *Merchandisers Accessories Guide)*

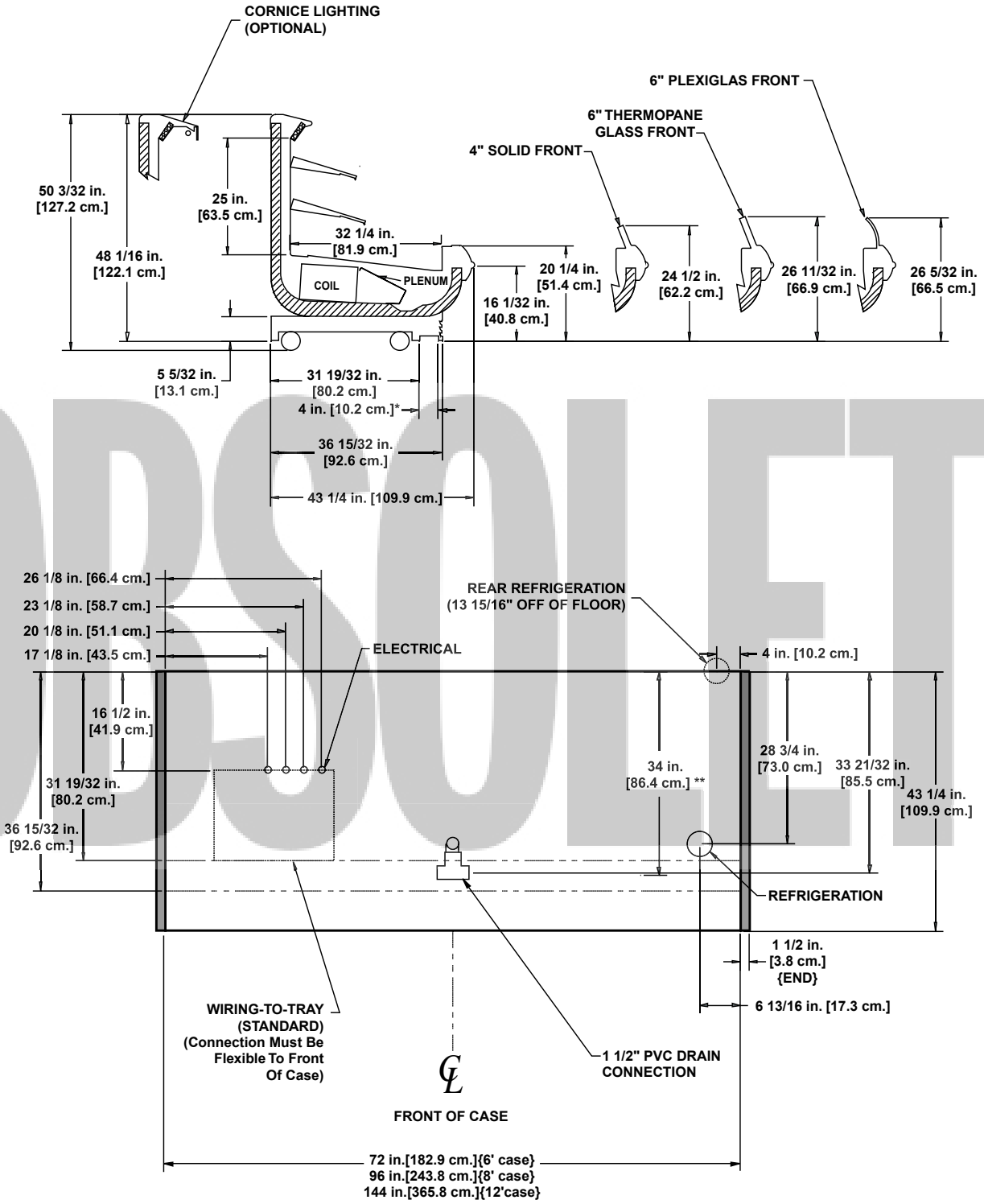

OBSOLETE

NOTES:

* STUB-UP AREA
** RECOMMENDED STUB-UP CENTERLINE FOR ELECTRICAL AND HUB DRAINS

- ENDS ADD APPROXIMATELY 1 INCH TO CASE HEIGHT
- A 2" MINIMUM AIR GAP IS REQUIRED BETWEEN THE REAR OF THE CASE AND A WALL
- BACK PANELS ADD APPROXIMATELY 1" TO THE REAR OF THE CASE
- SUCTION LINE - 7/8", LIQUID LINE - 5/8"

*(For additional rear sill options refer to the *Merchandisers Accessories Guide)*

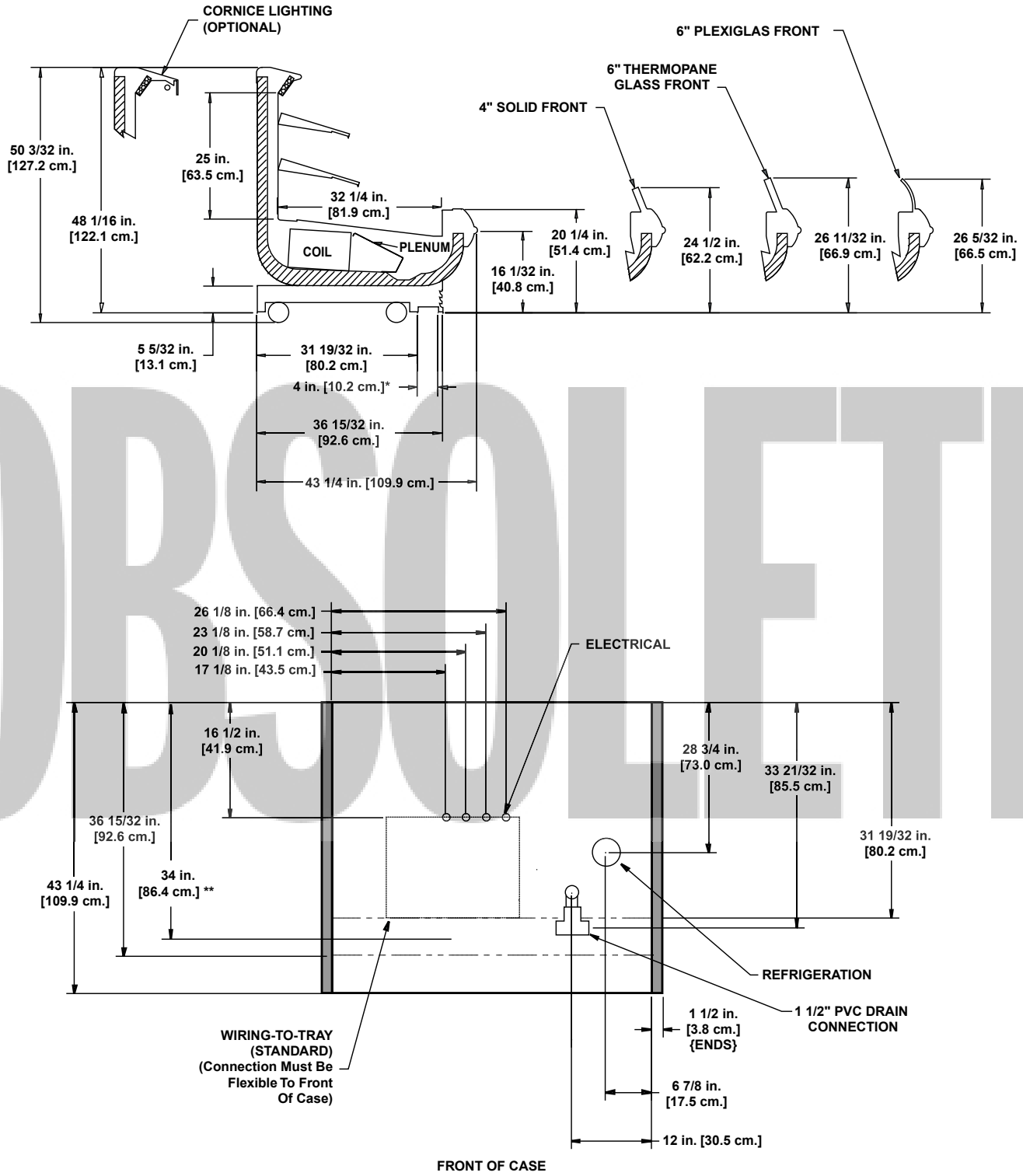

OBSOLETE

NOTES:

* STUB-UP AREA
** RECOMMENDED STUB-UP CENTERLINE FOR ELECTRICAL AND HUB DRAINS

- ENDS ADD APPROXIMATELY 1 INCH TO CASE HEIGHT
- A 2" MINIMUM AIR GAP IS REQUIRED BETWEEN THE REAR OF THE CASE AND A WALL
- BACK PANELS ADD APPROXIMATELY 1" TO THE REAR OF THE CASE
- SUCTION LINE - 7/8", LIQUID LINE - 5/8"

Multi-Deck Dairy/Deli/Meat Merchandisers

O3.5UM - 4’, 6’, 8’, & 12’ low profile dairy/deli/meat

Electrical Data

Model		Fans per Case	Standard Fans 120 Volts Amps	Standard Fans 120 Volts Watts	High Efficiency Fans 120 Volts Amps	High Efficiency Fans 120 Volts Watts	Anti-Condensate Heaters[1] 120 Volts Amps	Anti-Condensate Heaters[1] 120 Volts Watts	Defrost Heaters 208 Volts Amps	Defrost Heaters 208 Volts Watts	Defrost Heaters 240 Volts Amps	Defrost Heaters 240 Volts Watts
O3.5UM	4’	2	1.00	60	0.60	40	0.14	17	1.90	400	2.22	532
	6’	2	1.00	60	0.60	40	0.20	24	2.88	600	3.33	798
	8’	3	1.50	90	0.90	60	0.25	30	3.85	800	4.44	1065
	12’	4	2.00	120	1.20	80	0.38	46	5.77	1200	6.67	1600

[1] Anti-condensate heater data for unlighted rear sill. For lighted rear sill, double the values.

Lighting Data

Model		Typical per Light Row 120 Volts Amps	Typical per Light Row 120 Volts Watts	Maximum Lighting 120 Volts Amps	Maximum Lighting 120 Volts Watts
O3.5UM	4’	0.57	68	1.91	229
	6’	0.57	68	3.03	364
	8’	0.57	68	3.03	364
	12’	0.77	92	4.62	554

OBSOLETE

Guidelines & Control Settings

Model[2]	Front Sill Heights	BTUH/ft[3]	Evaporator (°F)	Discharge Air (°F)	Average Product (°F)	Return Air (°F)	Discharge Air Velocity[4] (FPM)
O3.5UM	27”, 31”, 33”	1300	17	30	34	45	300

[2] Model O3.5UM only available for meat application with 33” front

[3] BTUH's/ft listed are for parallel operation. Conventional ratings may be approximated by multiplying listed rating by 1.04.

[4] Average discharge air velocity at peak of defrost.

Defrost Controls

Model	Defrosts Per Day	Electric Defrost Fail-safe (min)	Electric Defrost Termination Temp. (°F)	Timed Off Defrost Fail-safe (min)	Timed Off Defrost Termination Temp. (°F)	Hot Gas Defrost Fail-safe (min)	Hot Gas Defrost Termination Temp. (°F)	Reverse Air Defrost Fail-safe (min)	Reverse Air Defrost Termination Temp. (°F)
O3.5UM	3	40	47	45	45	26	39	45	45

Medium Temperature Defrost Schedule

No. Per Day	Hours
1	12 midnight
2	12 am - 12 pm
3	6 am - 2 pm - 10 pm
4	12 - 6 am - 12 - 6 pm

Hill PHOENIX™ EXCELLENCE

A DOVER DIVERSIFIED COMPANY

All measurements are taken per CRMA specifications.

O3.5UM
(11" BASEFRAME)

*(For additional rear sill options refer to the *Merchandisers Accessories Guide)*

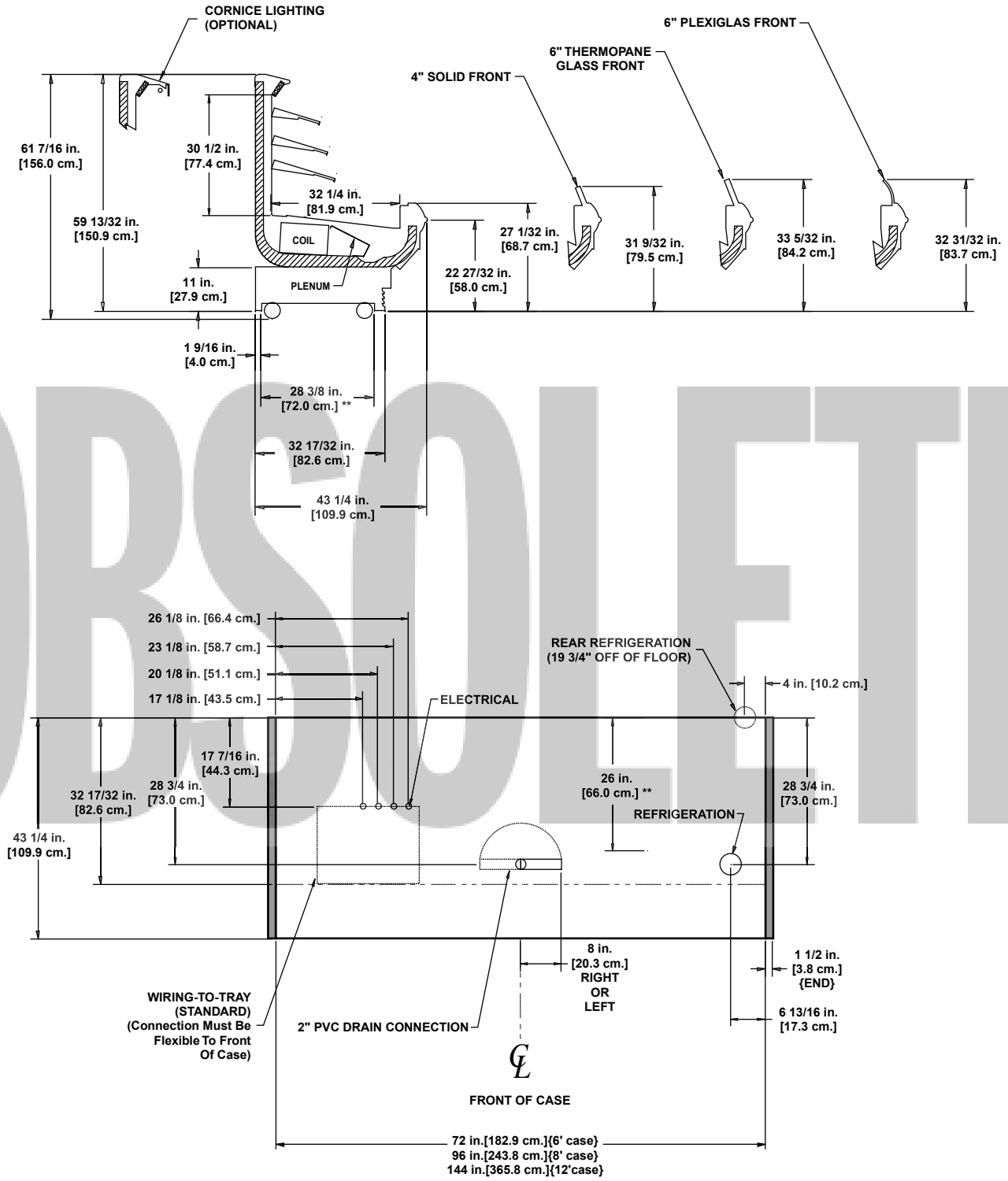

OBSOLETE

NOTES:

* STUB-UP AREA
** RECOMMENDED STUB-UP CENTERLINE FOR ELECTRICAL AND HUB DRAINS

- ENDS ADD APPROXIMATELY 1 INCH TO CASE HEIGHT
- A 2" MINIMUM AIR GAP IS REQUIRED BETWEEN THE REAR OF THE CASE AND A WALL
- BACK PANELS ADD APPROXIMATELY 1" TO THE REAR OF THE CASE
- SUCTION LINE - 7/8", LIQUID LINE - 5/8"

*(For additional rear sill options refer to the *Merchandisers Accessories Guide)*

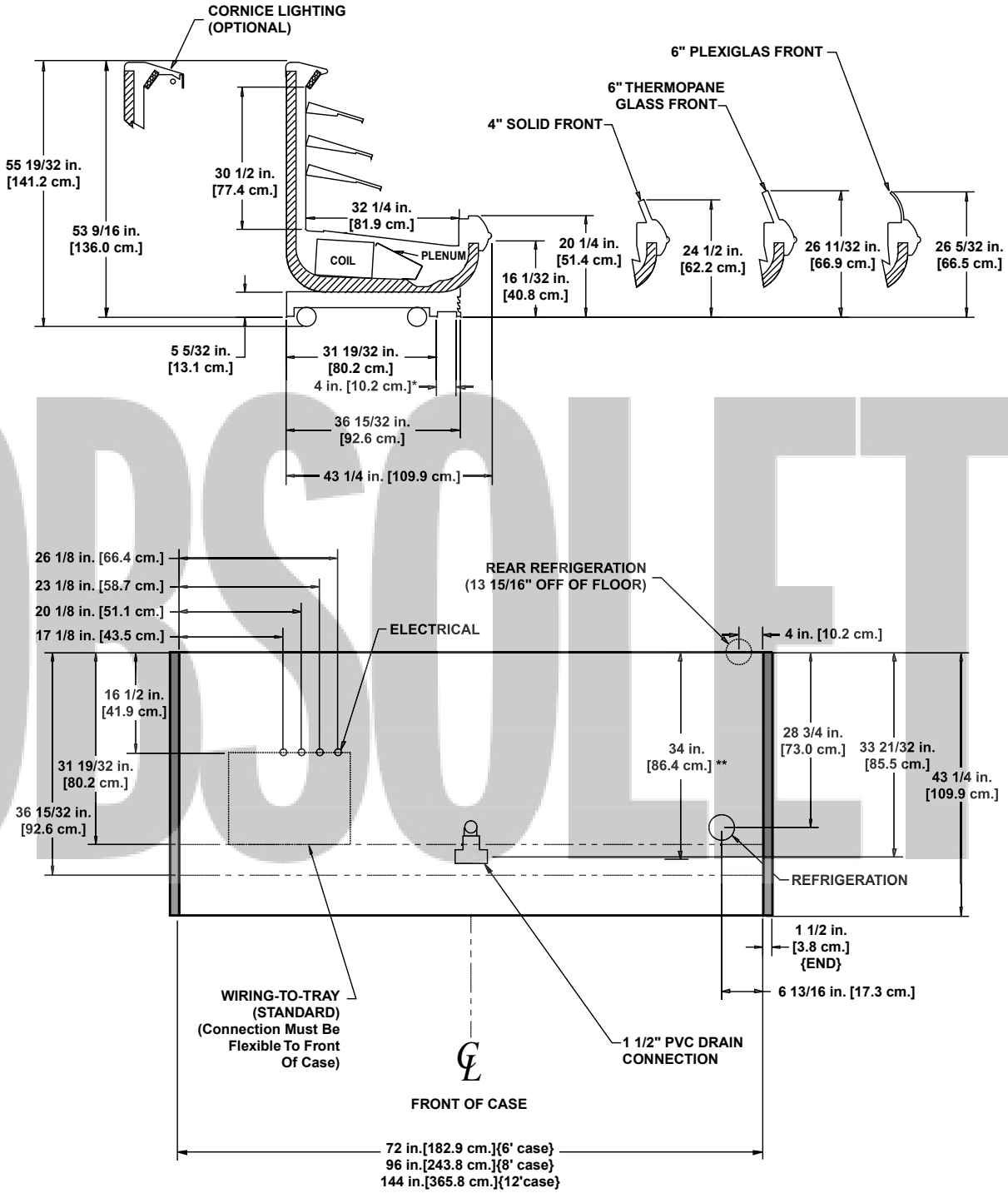

OBSOLETE

NOTES:

* STUB-UP AREA
** RECOMMENDED STUB-UP CENTERLINE FOR ELECTRICAL AND HUB DRAINS

- ENDS ADD APPROXIMATELY 1 INCH TO CASE HEIGHT
- A 2" MINIMUM AIR GAP IS REQUIRED BETWEEN THE REAR OF THE CASE AND A WALL
- BACK PANELS ADD APPROXIMATELY 1" TO THE REAR OF THE CASE
- SUCTION LINE - 7/8", LIQUID LINE - 5/8"

*(For additional rear sill options refer to the *Merchandisers Accessories Guide)*

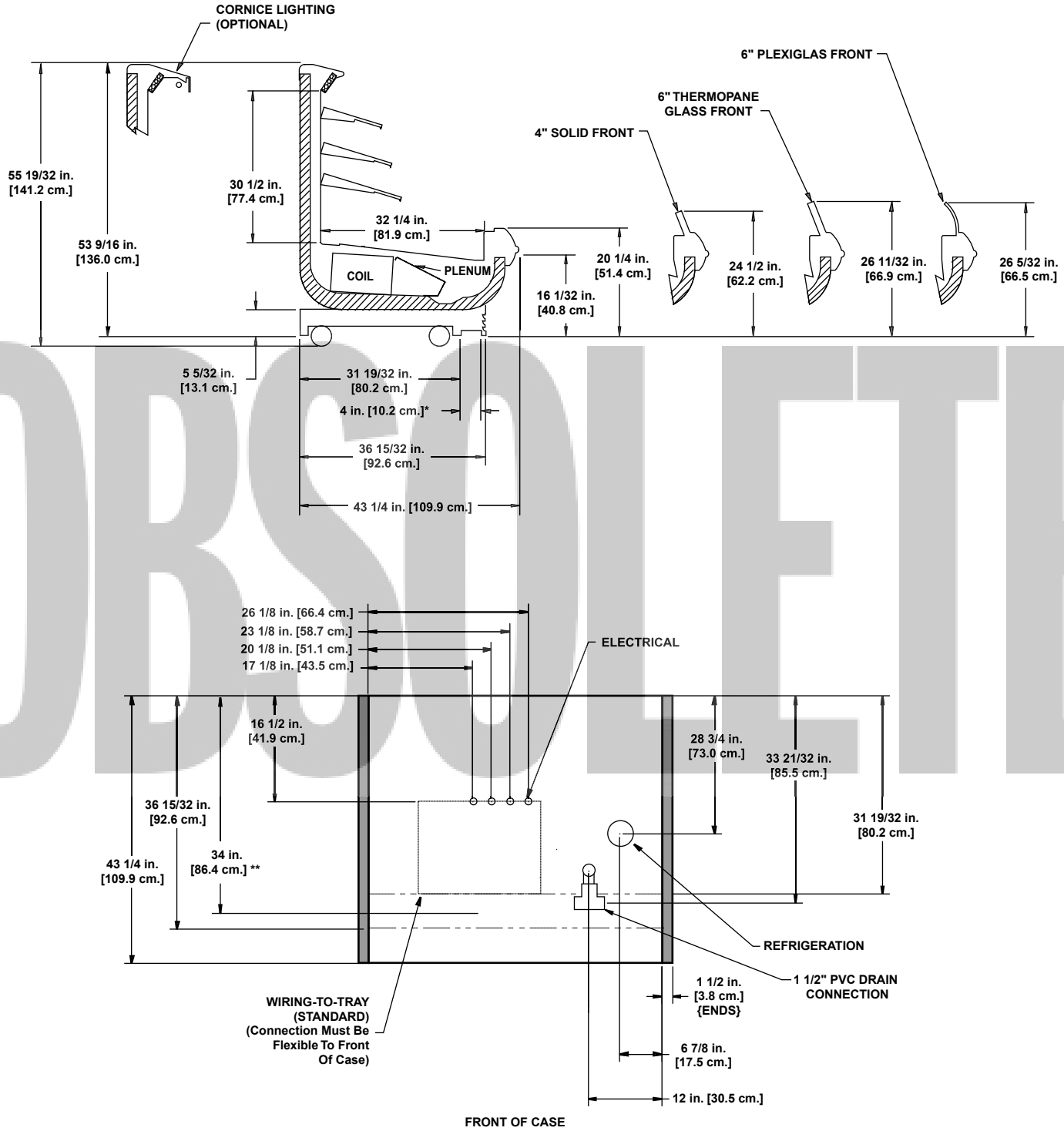

OBSOLETE

NOTES:

* STUB-UP AREA
** RECOMMENDED STUB-UP CENTERLINE FOR ELECTRICAL AND HUB DRAINS

- ENDS ADD APPROXIMATELY 1 INCH TO CASE HEIGHT
- A 2" MINIMUM AIR GAP IS REQUIRED BETWEEN THE REAR OF THE CASE AND A WALL
- BACK PANELS ADD APPROXIMATELY 1" TO THE REAR OF THE CASE
- SUCTION LINE - 7/8", LIQUID LINE - 5/8"

Multi-Deck Dairy/Deli Merchandisers

O4UM - 6’, 8’, & 12’ multi-deck dairy/deli

Electrical Data

Model		Fans per Case	Standard Fans 120 Volts Amps	Standard Fans 120 Volts Watts	High Efficiency Fans 120 Volts Amps	High Efficiency Fans 120 Volts Watts	Anti-Condensate Heaters[1] 120 Volts Amps	Anti-Condensate Heaters[1] 120 Volts Watts	Defrost Heaters 208 Volts Amps	Defrost Heaters 208 Volts Watts	Defrost Heaters 240 Volts Amps	Defrost Heaters 240 Volts Watts
O4UM	6’	2	1.00	60	0.60	40	0.20	24	2.88	600	3.33	798
	8’	3	1.50	90	0.90	60	0.25	30	3.85	800	4.44	1065
	12’	4	2.00	120	1.20	80	0.38	46	5.77	1200	6.67	1600

[1] Anti-condensate heater data for unlighted rear sill. For lighted rear sill, double the values.

Lighting Data

Model		Typical per Light Row 120 Volts Amps	Typical per Light Row 120 Volts Watts	Maximum Lighting 120 Volts Amps	Maximum Lighting 120 Volts Watts
O4UM	6’	0.57	68	3.03	364
	8’	0.57	68	3.03	364
	12’	0.77	92	4.62	554

OBSOLETE

Guidelines & Control Settings

Model	Front Sill Heights	BTUH/ft[2]	Evaporator (°F)	Discharge Air (°F)	Average Product (°F)	Return Air (°F)	Discharge Air Velocity[3] (FPM)
O4UM	33”	1460	17	30	34	43	300

[2] BTUH's/ft listed are for parallel operation. Conventional ratings may be approximated by multiplying listed rating by 1.04.

[3] Average discharge air velocity at peak of defrost.

Defrost Controls

Model	Defrosts Per Day	Electric Defrost Fail-safe (min)	Electric Defrost Termination Temp. (°F)	Timed Off Defrost Fail-safe (min)	Timed Off Defrost Termination Temp. (°F)	Hot Gas Defrost Fail-safe (min)	Hot Gas Defrost Termination Temp. (°F)	Reverse Air Defrost Fail-safe (min)	Reverse Air Defrost Termination Temp. (°F)
O4UM	4	40	47	45	45	26	39	45	45

Medium Temperature Defrost Schedule

No. Per Day	Hours
1	12 midnight
2	12 am - 12 pm
3	6 am - 2 pm - 10 pm
4	12 - 6 am - 12 - 6 pm

Hill PHOENIX™ EXCELLENCE

A DOVER DIVERSIFIED COMPANY

All measurements are taken per CRMA specifications.

O4UM
(11" BASEFRAME)

*(For additional rear sill options refer to the *Merchandisers Accessories Guide)*

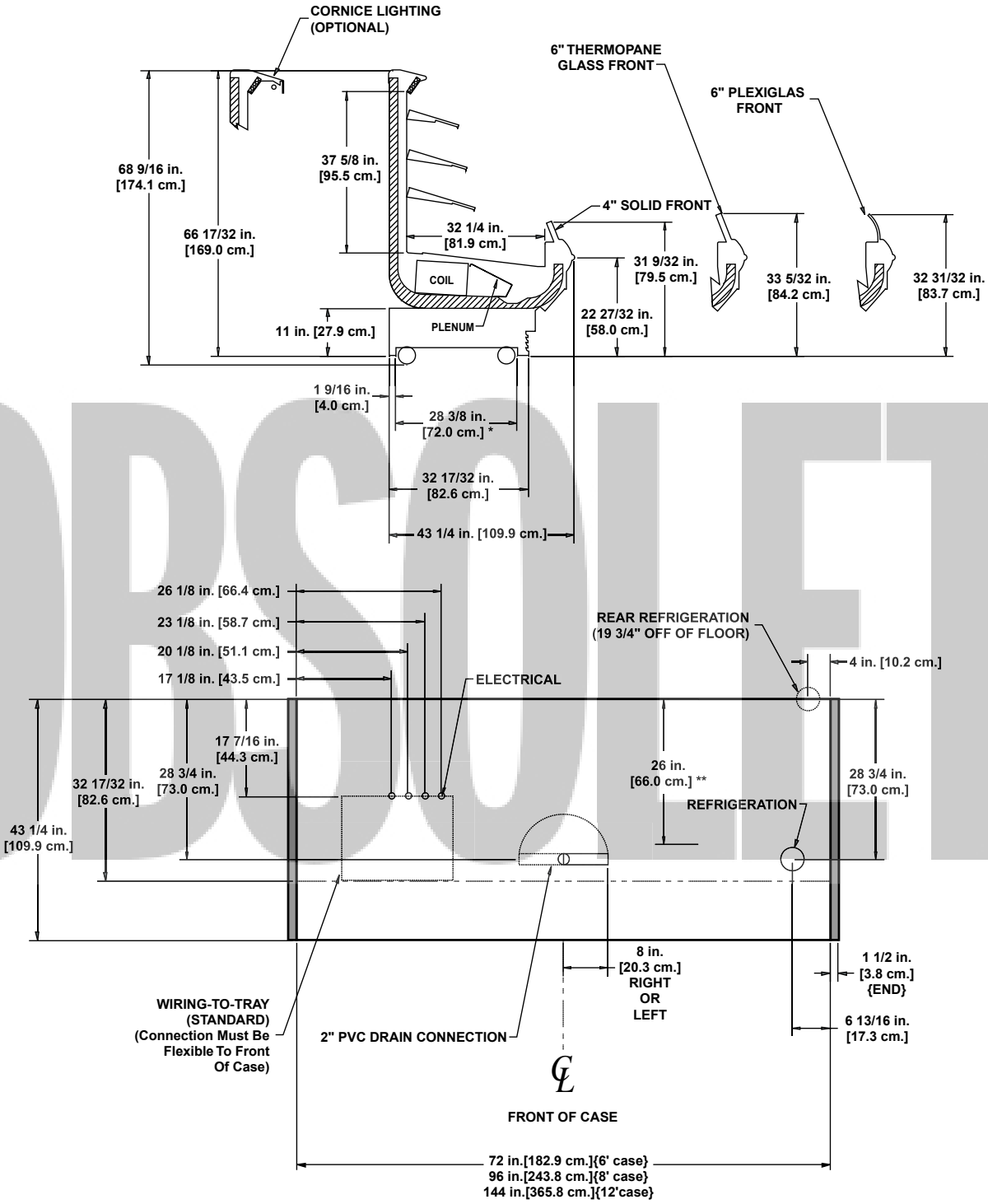

OBSOLETE

NOTES:

* STUB-UP AREA
** RECOMMENDED STUB-UP CENTERLINE FOR ELECTRICAL AND HUB DRAINS

- ENDS ADD APPROXIMATELY 1 INCH TO CASE HEIGHT
- A 2" MINIMUM AIR GAP IS REQUIRED BETWEEN THE REAR OF THE CASE AND A WALL
- BACK PANELS ADD APPROXIMATELY 1" TO THE REAR OF THE CASE
- SUCTION LINE - 7/8", LIQUID LINE - 5/8"

(5 5/32" BASEFRAME)

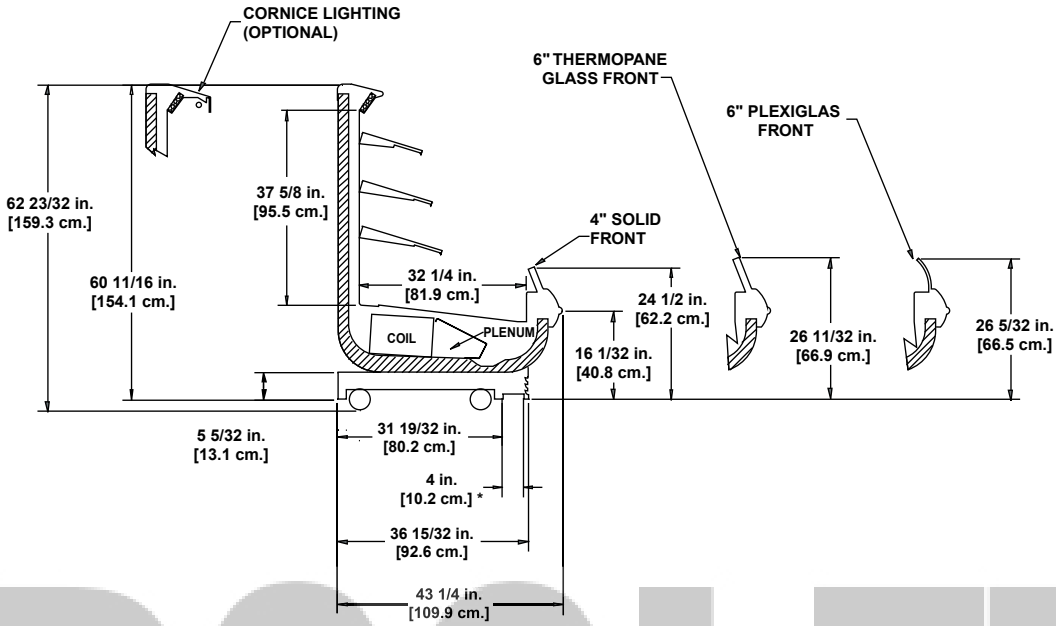

OBSOLETE

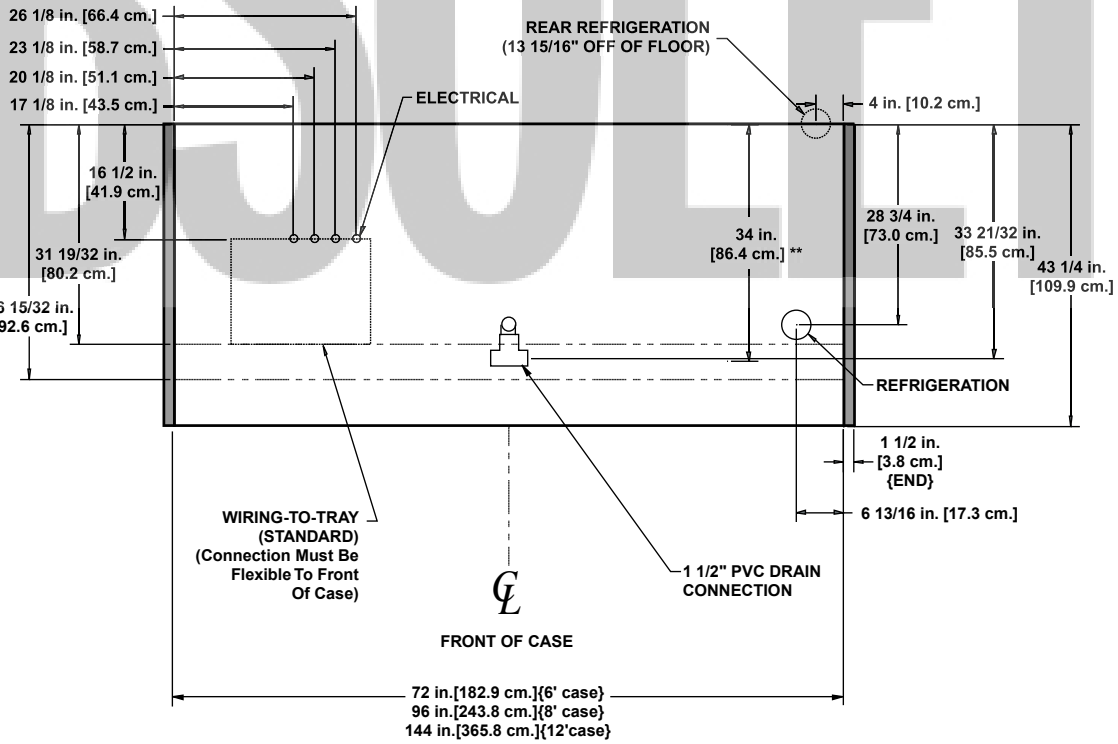

NOTES:

* STUB-UP AREA
** RECOMMENDED STUB-UP CENTERLINE FOR ELECTRICAL AND HUB DRAINS

- ENDS ADD APPROXIMATELY 1 INCH TO CASE HEIGHT
- A 2" MINIMUM AIR GAP IS REQUIRED BETWEEN THE REAR OF THE CASE AND A WALL
- BACK PANELS ADD APPROXIMATELY 1" TO THE REAR OF THE CASE
- SUCTION LINE - 7/8", LIQUID LINE - 5/8"

OBSOLETE

Multi-Deck Dairy/Deli Merchandisers

O5UM - 6', 8', & 12' multi-deck dairy/deli

Electrical Data

Model		Fans per Case	Standard Fans 120 Volts Amps	Standard Fans 120 Volts Watts	High Efficiency Fans 120 Volts Amps	High Efficiency Fans 120 Volts Watts	Anti-Condensate Heaters[1] 120 Volts Amps	Anti-Condensate Heaters[1] 120 Volts Watts	Defrost Heaters 208 Volts Amps	Defrost Heaters 208 Volts Watts	Defrost Heaters 240 Volts Amps	Defrost Heaters 240 Volts Watts
O5UM	6'	2	1.00	60	0.60	40	0.20	24	2.88	600	3.33	798
	8'	3	1.50	90	0.90	60	0.25	30	3.85	800	4.44	1065
	12'	4	2.00	120	1.20	80	0.38	46	5.77	1200	6.67	1600

[1] Anti-condensate heater data for unlighted rear sill. For lighted rear sill, double the values.

Lighting Data

Model		Typical per Light Row 120 Volts Amps	Typical per Light Row 120 Volts Watts	Maximum Lighting 120 Volts Amps	Maximum Lighting 120 Volts Watts
O5UM	6'	0.57	68	3.33	400
	8'	0.57	68	3.33	400
	12'	0.77	92	5.07	608

OBSOLETE

Guidelines & Control Settings

Model	Front Sill Heights	BTUH/ft[2]	Evaporator (°F)	Discharge Air (°F)	Average Product (°F)	Return Air (°F)	Discharge Air Velocity[3] (FPM)
O5UM	33"	1490	17	30	35	42	300

[2] BTUH's/ft listed are for parallel operation. Conventional ratings may be approximated by multiplying listed rating by 1.04.

[3] Average discharge air velocity at peak of defrost.

Defrost Controls

Model	Defrosts Per Day	Electric Defrost Fail-safe (min)	Electric Defrost Termination Temp. (°F)	Timed Off Defrost Fail-safe (min)	Timed Off Defrost Termination Temp. (°F)	Hot Gas Defrost Fail-safe (min)	Hot Gas Defrost Termination Temp. (°F)	Reverse Air Defrost Fail-safe (min)	Reverse Air Defrost Termination Temp. (°F)
O5UM	4	40	47	- - - [4]	- - -	26	39	45	45

[4] NOTE: - - - not an option on this case model.

Medium Temperature Defrost Schedule

No. Per Day	Hours
1	12 midnight
2	12 am - 12 pm
3	6 am - 2 pm - 10 pm
4	12 - 6 am - 12 - 6 pm

Hill PHOENIX™ EXCELLENCE

A DOVER DIVERSIFIED COMPANY

All measurements are taken per CRMA specifications.

O5UM
(11" BASEFRAME)

*(For additional rear sill options refer to the *Merchandisers Accessories Guide)*

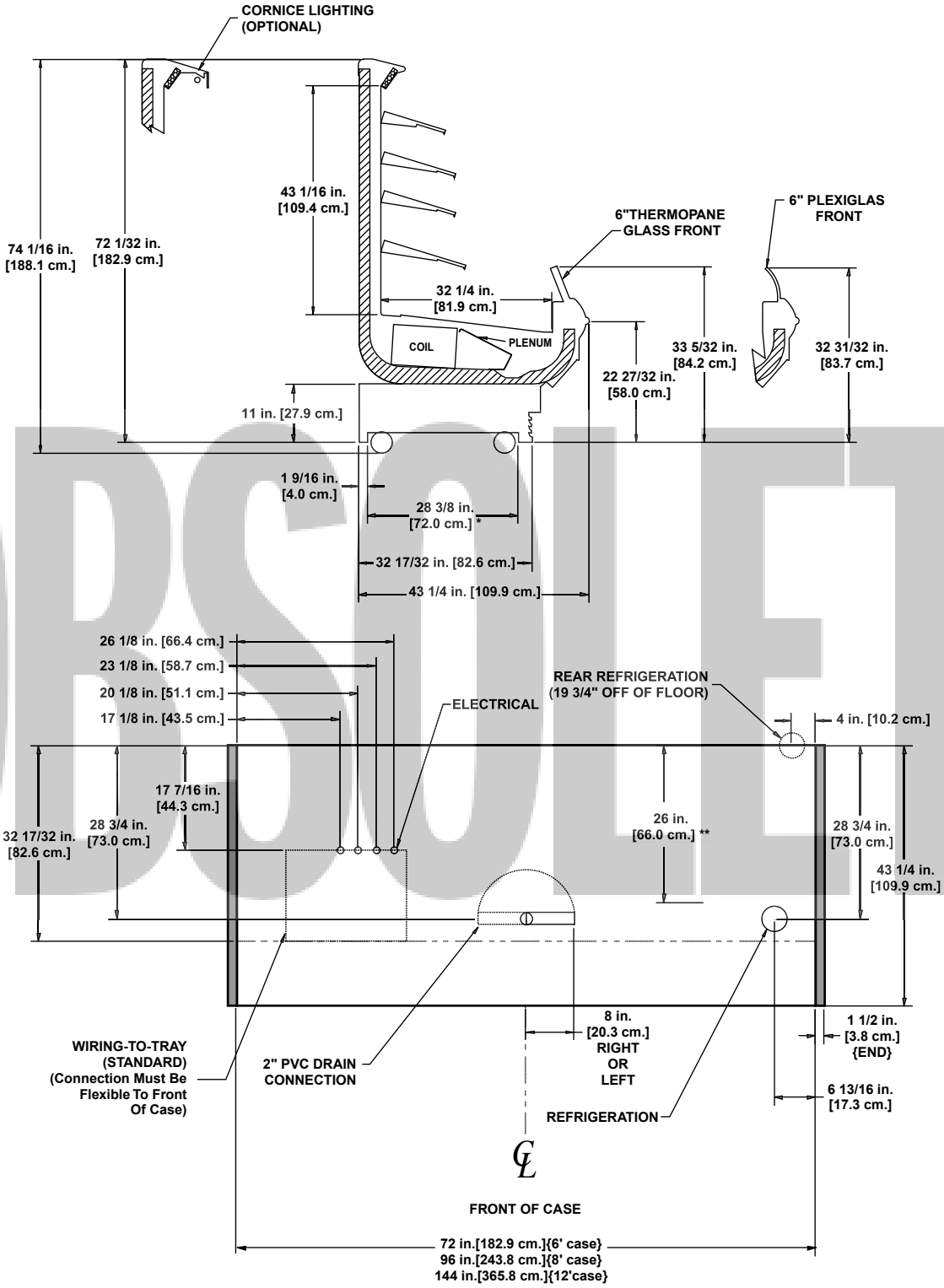

OBSOLETE

NOTES:

* STUB-UP AREA
** RECOMMENDED STUB-UP CENTERLINE FOR ELECTRICAL AND HUB DRAINS

- ENDS ADD APPROXIMATELY 1 INCH TO CASE HEIGHT
- A 2" MINIMUM AIR GAP IS REQUIRED BETWEEN THE REAR OF THE CASE AND A WALL
- BACK PANELS ADD APPROXIMATELY 1" TO THE REAR OF THE CASE
- SUCTION LINE - 7/8", LIQUID LINE - 5/8"

*(For additional rear sill options refer to the *Merchandisers Accessories Guide)*

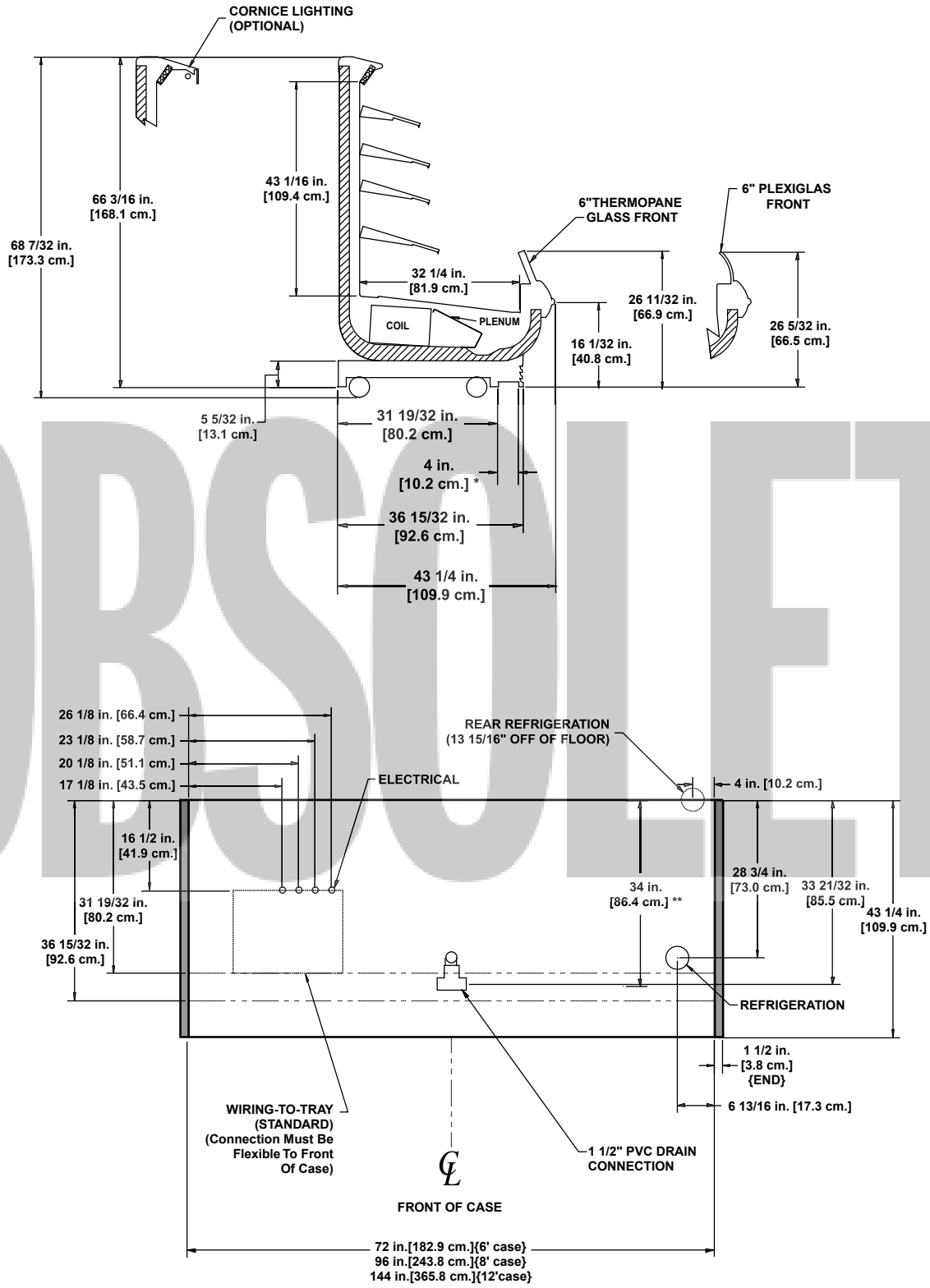

OBSOLETE

NOTES:

* STUB-UP AREA
** RECOMMENDED STUB-UP CENTERLINE FOR ELECTRICAL AND HUB DRAINS

- ENDS ADD APPROXIMATELY 1 INCH TO CASE HEIGHT
- A 2" MINIMUM AIR GAP IS REQUIRED BETWEEN THE REAR OF THE CASE AND A WALL
- BACK PANELS ADD APPROXIMATELY 1" TO THE REAR OF THE CASE
- SUCTION LINE - 7/8" LIQUID LINE - 5/8"

OBSOLETE

Multi-Deck Rear Load Dairy Merchandisers

O5DR - 8’ & 12’ rear load dairy

Electrical Data

Model		Fans per Case	Standard Fans 120 Volts Amps	Standard Fans 120 Volts Watts	High Efficiency Fans 120 Volts Amps	High Efficiency Fans 120 Volts Watts	Anti-Condensate Heaters 120 Volts Amps	Anti-Condensate Heaters 120 Volts Watts	Defrost Heaters 208 Volts Amps	Defrost Heaters 208 Volts Watts	Defrost Heaters 240 Volts Amps	Defrost Heaters 240 Volts Watts
O5DR	8’	4	2.00	120	1.20	56	- - -[1]	- - -	- - -	- - -	- - -	- - -
	12’	5	2.50	150	1.50	70	- - -	- - -	- - -	- - -	- - -	- - -

[1] NOTE: - - - not an option on this case model.

Lighting Data

Model		Typical per Light Row 120 Volts Amps	Typical per Light Row 120 Volts Watts	Maximum Lighting 120 Volts Amps	Maximum Lighting 120 Volts Watts
O5DR	8’	0.48	58	4.56	552
	12’	0.70	83	6.76	812

OBSOLETE

Guidelines & Control Settings

Model	Front Sill Heights	BTUH/ft[2]	Evaporator (°F)	Discharge Air (°F)	Average Product (°F)	Return Air (°F)	Discharge Air Velocity[3] (FPM)
O5DR	18”	1502	17	32	36	47	275
	21”	1502	17	32	36	46	275
	23”	1453	17	32	35	42	275
	26”	1425	17	32	35	42	275
O5DR	18”	1389	22	35	37	48	275
	21”	1422	22	35	37	47	275

[2] BTUH's/ft listed are for parallel operation. Conventional ratings may be approximated by multiplying listed rating by 1.04.

[3] Average discharge air velocity at peak of defrost.

Defrost Controls

Model	Defrosts Per Day	Electric Defrost Fail-safe (min)	Electric Defrost Termination Temp. (°F)	Timed Off Defrost Fail-safe (min)	Timed Off Defrost Termination Temp. (°F)	Hot Gas Defrost Fail-safe (min)	Hot Gas Defrost Termination Temp. (°F)	Reverse Air Defrost Fail-safe (min)	Reverse Air Defrost Termination Temp. (°F)
O5DR	4	- - -	- - -	45	47	- - -	- - -	- - -	- - -

Medium Temperature Defrost Schedule

No. Per Day	Hours
1	12 midnight
2	12 am - 12 pm
3	6 am - 2 pm - 10 pm
4	12 - 6 am - 12 - 6 pm

Hill PHOENIX EXCELLENCE™

A DOVER DIVERSIFIED COMPANY

All measurements are taken per CRMA specifications.

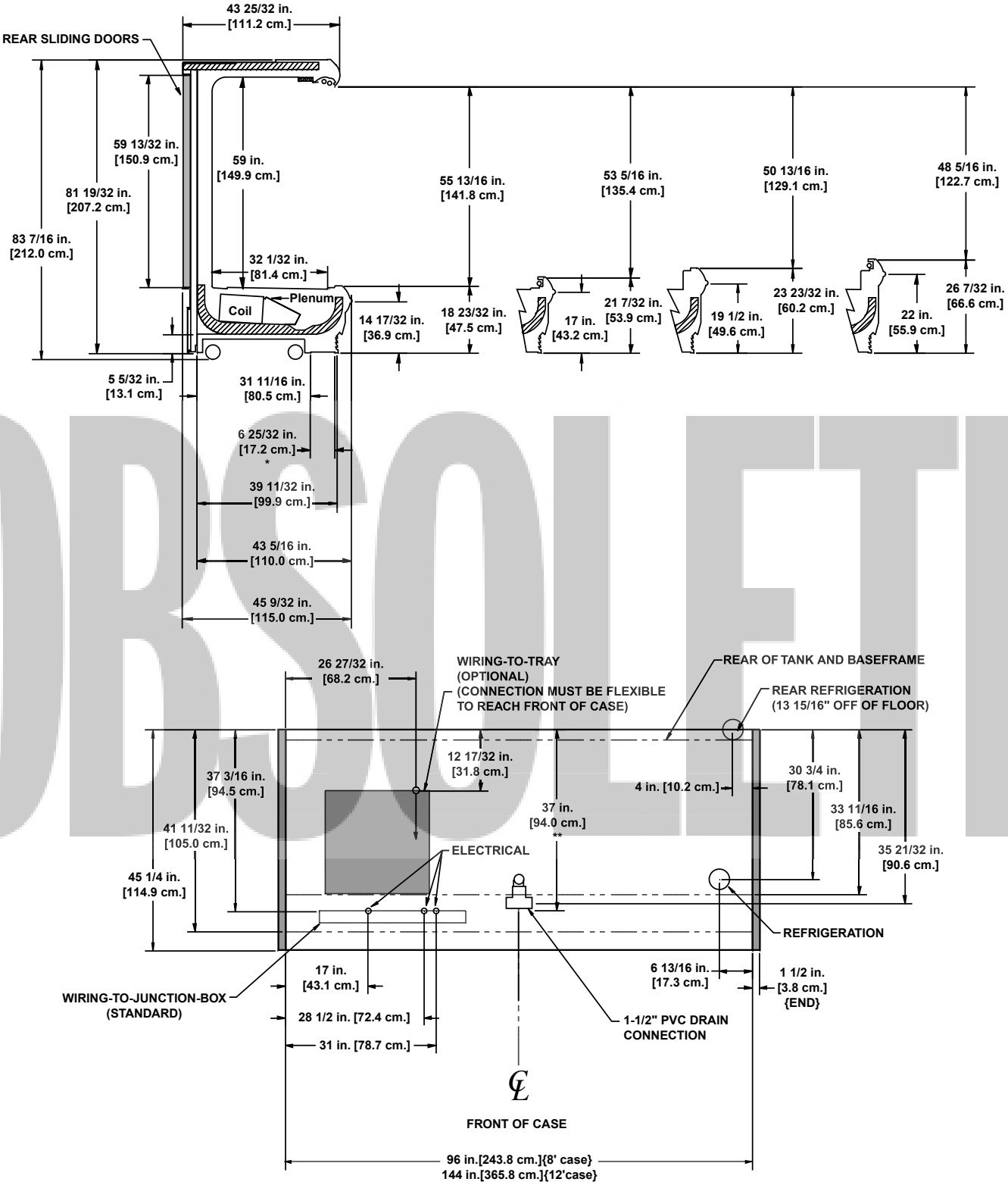

OBSOLETE

NOTE:

* STUB-UP AREA
** RECOMMENDED STUB-UP CENTERLINE FOR ELECTRICAL AND HUB DRAINS

- ENDS ADD APPROXIMATELY 1 INCH TO CASE HEIGHT
- SUCTION LINE 7/8", LIQUID LINE - 5/8"

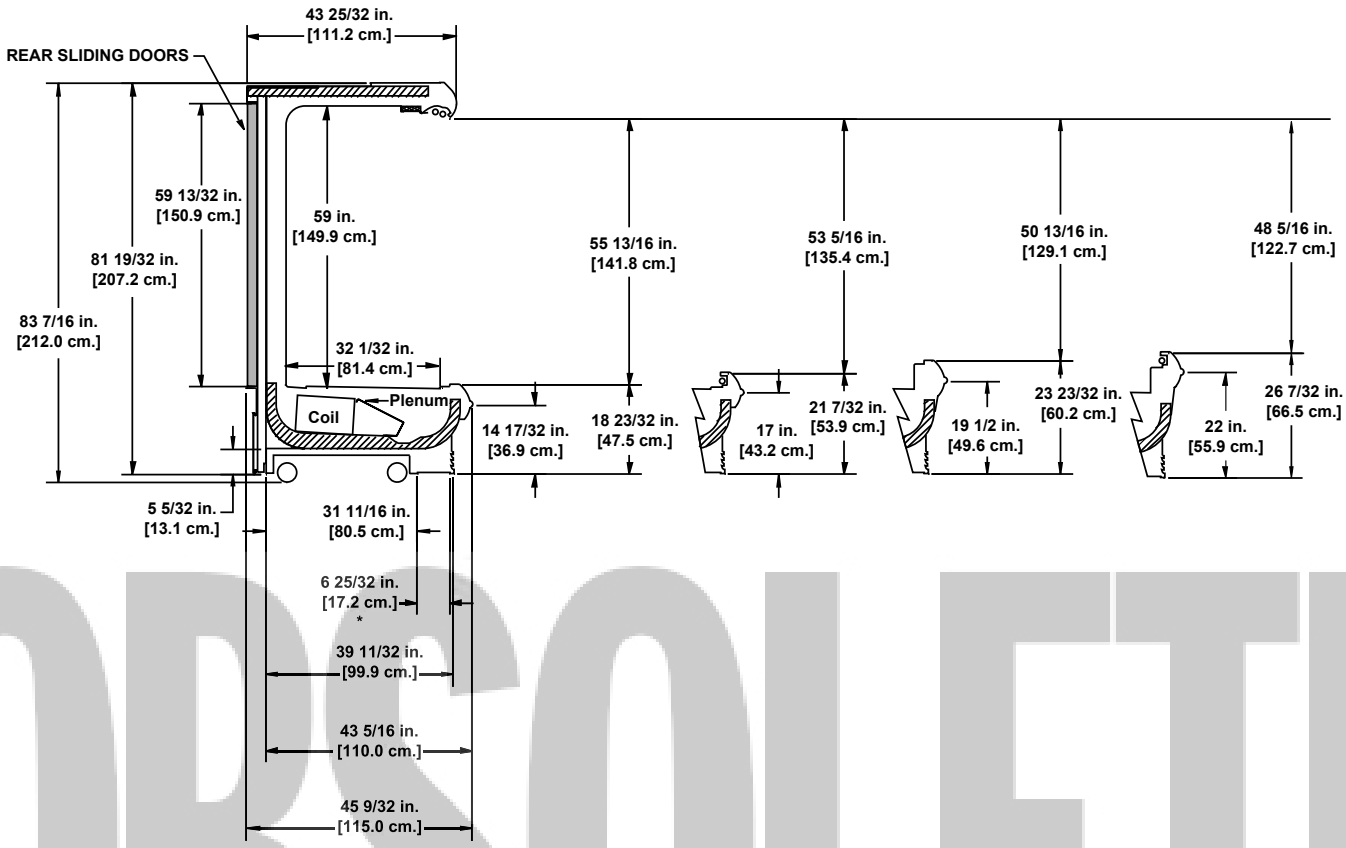

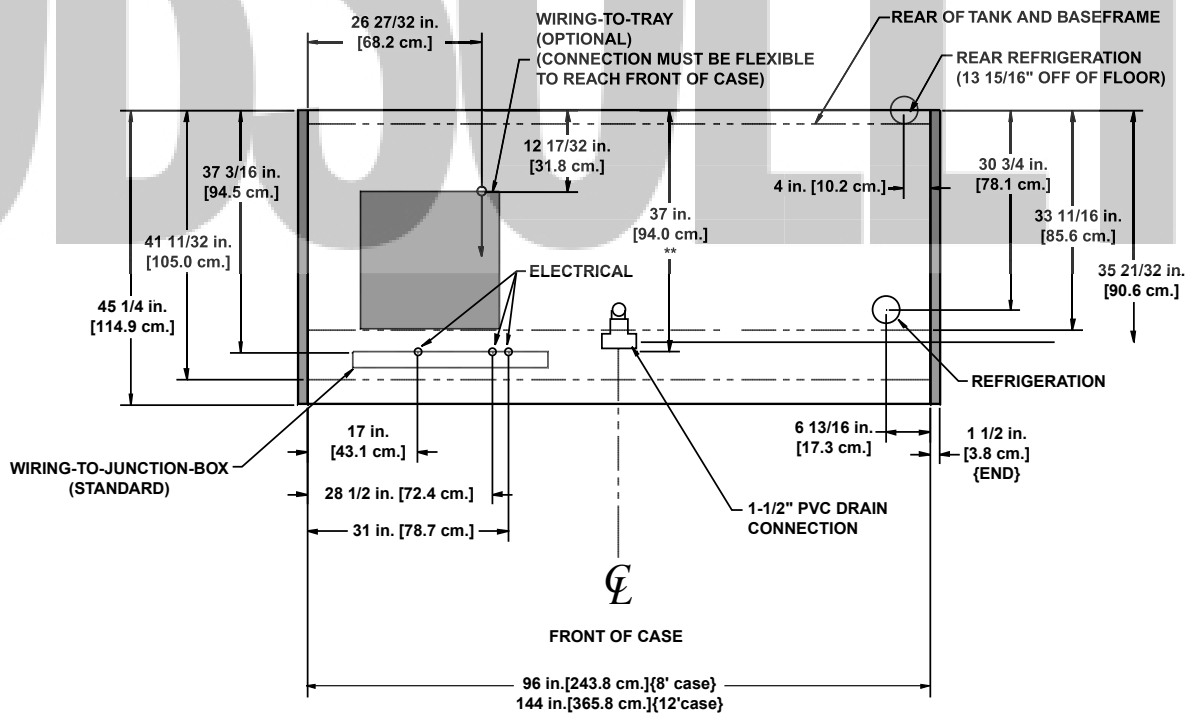

OBSOLETE

NOTE:

* STUB-UP AREA
** RECOMMENDED STUB-UP CENTERLINE FOR ELECTRICAL AND HUB DRAINS

- ENDS ADD APPROXIMATELY 1 INCH TO CASE HEIGHT
- SUCTION LINE 7/8", LIQUID LINE - 5/8"

OBSOLETE

Multi-Deck Dairy/Deli/Produce Merchandisers

O5DM - 4’, 6’, 8’, & 12’ dairy/deli/produce

Electrical Data

Model		Fans per Case	Standard Fan 120 Volts Amps	Standard Fan 120 Volts Watts	High Efficiency Fans 120 Volts Amps	High Efficiency Fans 120 Volts Watts	Anti-Condensate Heaters 120 Volts Amps	Anti-Condensate Heaters 120 Volts Watts	Defrost Heaters 208 Volts Amps	Defrost Heaters 208 Volts Watts	Defrost Heaters 240 Volts Amps	Defrost Heaters 240 Volts Watts
O5DM	4’	2	1.00	60	1.00	34	- - -[1]	- - -	1.92	400	2.22	532
	6’	2	1.00	60	1.00	34	- - -	- - -	2.88	600	3.33	798
	8’	3	1.50	90	1.50	51	- - -	- - -	3.85	800	4.44	1065
	12’	4	2.00	120	2.00	69	- - -	- - -	5.78	1200	6.67	1600

[1] NOTE: - - - not an option on this case model.

Lighting Data

Model		Typical per Light Row 120 Volts Amps	Typical per Light Row 120 Volts Watts	Maximum Lighting 120 Volts Amps	Maximum Lighting 120 Volts Watts
O5DM	4’	0.57	68	3.55	426
	6’	0.57	68	4.47	536
	8’	0.57	68	4.47	536
	12’	0.77	92	6.61	793

OBSOLETE

Guidelines & Control Settings

Model	Front Sill Heights	BTUH/ft[2]	Evaporator (°F)	Discharge Air (°F)	Average Product (°F)	Return Air (°F)	Discharge Air Velocity[3] (FPM)
O5DM Deli w/ Shelf Lights	21”	1570	17	30	35	44	250
	23”	1530	17	30	34	44	250
	26”	1500	17	30	33	44	250
O5DM Dairy Cut Produce w/ Shelf Lights	18”	1500	22	34	37	47	265
	21”	1460	22	34	36	47	265
	23”	1430	22	34	36	47	265
	26”	1400	22	34	36	47	265
O5DM Beverage Bulk Produce w/o Shelf Lights	18”	1490	27	36	39	52	250
	21”	1450	27	36	38	52	250
	23”	1420	27	36	38	52	250
	26”	1390	27	36	38	52	250

[2] BTUH's/ft listed are for parallel operation. Conventional ratings may be approximated by multiplying listed rating by 1.04.

[3] Average discharge air velocity at peak of defrost.

Defrost Controls

Model	Defrosts Per Day	Electric Defrost Fail-safe (min)	Electric Defrost Termination Temp. (°F)	Timed Off Defrost Fail-safe (min)	Timed Off Defrost Termination Temp. (°F)	Hot Gas Defrost Fail-safe (min)	Hot Gas Defrost Termination Temp. (°F)	Reverse Air Defrost Fail-safe (min)	Reverse Air Defrost Termination Temp. (°F)
O5DM Dairy/Deli/Produce	3	32	47	42	44	26	47	42	52

Medium Temperature Defrost Schedule

No. Per Day	Hours
1	12 midnight
2	12 am - 12 pm
3	6 am - 2 pm - 10 pm
4	12 - 6 am - 12 - 6 pm

Hill PHOENIX EXCELLENCE™

A DOVER DIVERSIFIED COMPANY

All measurements are taken per CRMA specifications.

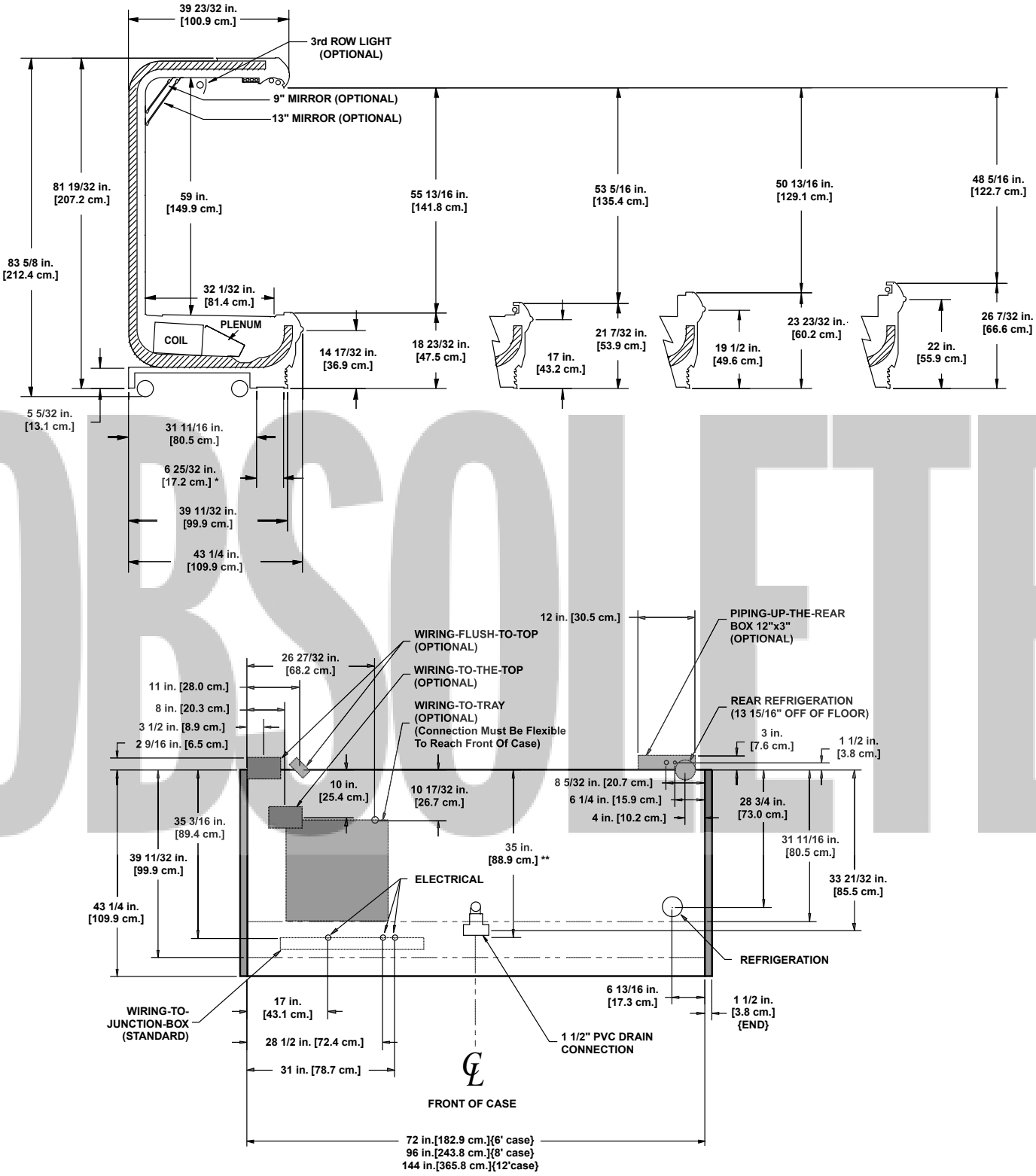

OBSOLETE

NOTES:

* STUB-UP AREA
** RECOMMENDED STUB-UP CENTERLINE FOR ELECTRICAL AND HUB DRAINS

- ENDS ADD APPROXIMATELY 1 INCH TO CASE HEIGHT
- WIRING-TO-THE-TOP- ADDS APPROXIMATELY 1 INCH TO CASE HEIGHT
- A 2" MINIMUM AIR GAP IS REQUIRED BETWEEN THE REAR OF THE CASE AND A WALL (WHEN THE CASE IS PIPED TO THE REAR A 3" TO 4" GAP MAY BE REQUIRED)
- BACK PANELS ADD APPROXIMATELY 1" TO THE REAR OF THE CASE
- SUCTION LINE 7/8", LIQUID LINE - 5/8"

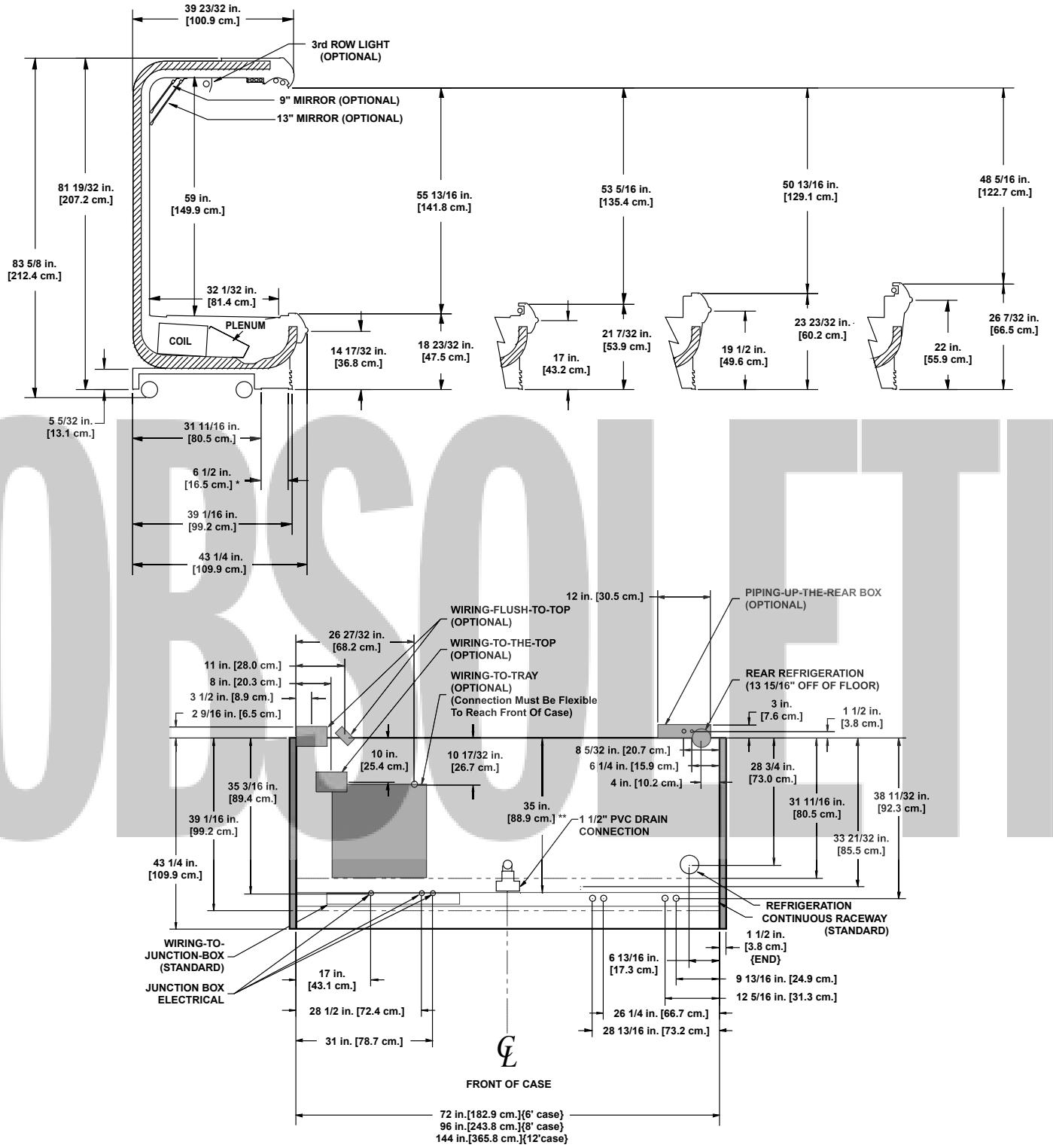

OBSOLETE

NOTES:

* STUB-UP AREA
** RECOMMENDED STUB-UP CENTERLINE FOR ELECTRICAL AND HUB DRAINS

- ENDS ADD APPROXIMATELY 1 INCH TO CASE HEIGHT
- WIRING-TO-THE-TOP- ADDS APPROXIMATELY 1 INCH TO CASE HEIGHT
- A 2" MINIMUM AIR GAP IS REQUIRED BETWEEN THE REAR OF THE CASE AND A WALL (WHEN THE CASE IS PIPED TO THE REAR A 3" TO 4" GAP MAY BE REQUIRED)
- BACK PANELS ADD APPROXIMATELY 1" TO THE REAR OF THE CASE
- SUCTION LINE 7/8", LIQUID LINE - 5/8"

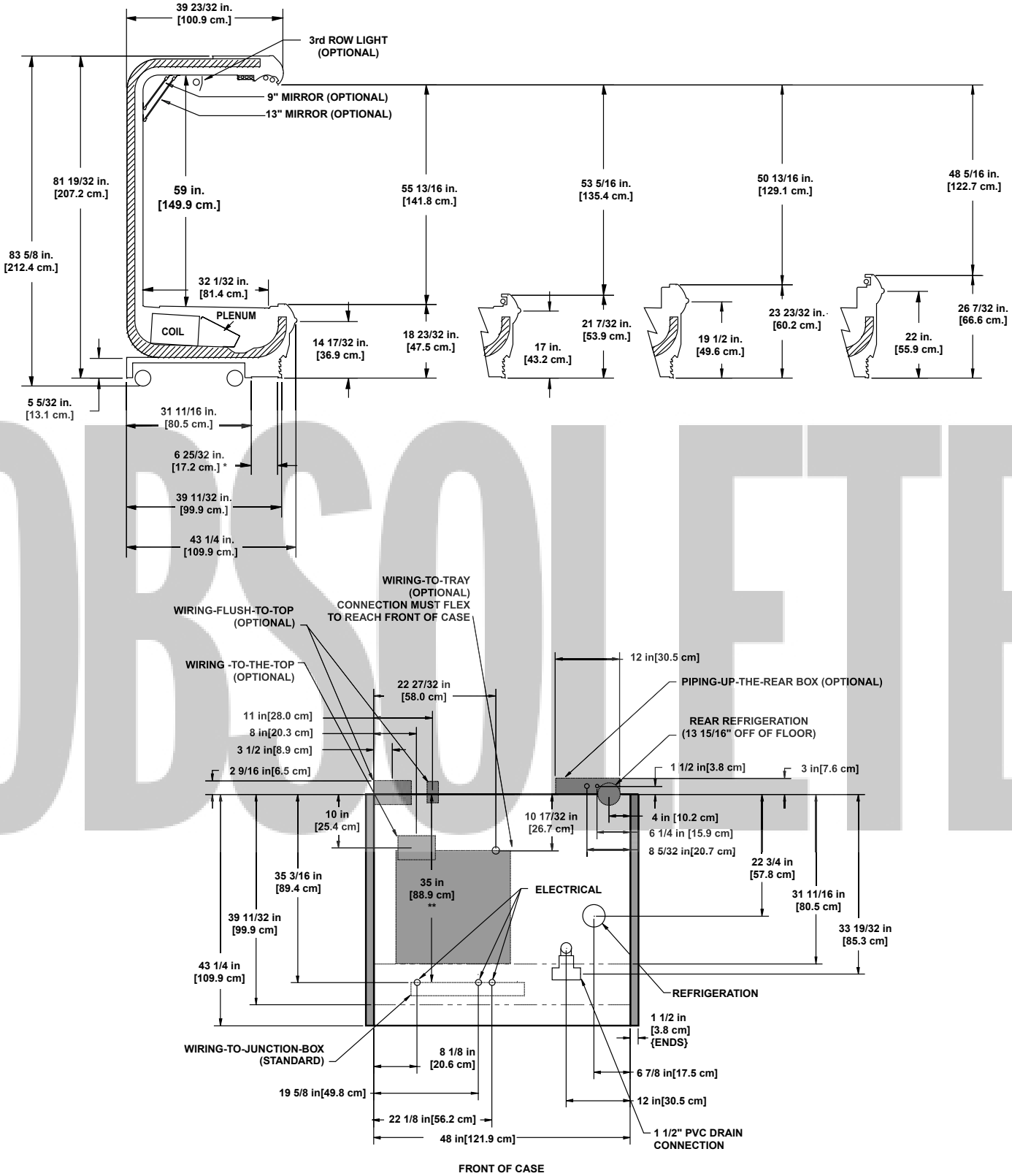

OBSOLETE

NOTES:

* STUB-UP AREA
** RECOMMENDED STUB-UP CENTERLINE FOR ELECTRICAL AND HUB DRAINS

- ENDS ADD APPROXIMATELY 1 INCH TO CASE HEIGHT
- WIRING-TO-THE-TOP- ADDS APPROXIMATELY 1 INCH TO CASE HEIGHT
- A 2" MINIMUM AIR GAP IS REQUIRED BETWEEN THE REAR OF THE CASE AND A WALL (WHEN THE CASE IS PIPED TO THE REAR A 3" TO 4" GAP MAY BE REQUIRED)
- BACK PANELS ADD APPROXIMATELY 1" TO THE REAR OF THE CASE
- SUCTION LINE 7/8", LIQUID LINE - 5/8"

O5DM-4'

(CURVED FRONT PANEL)

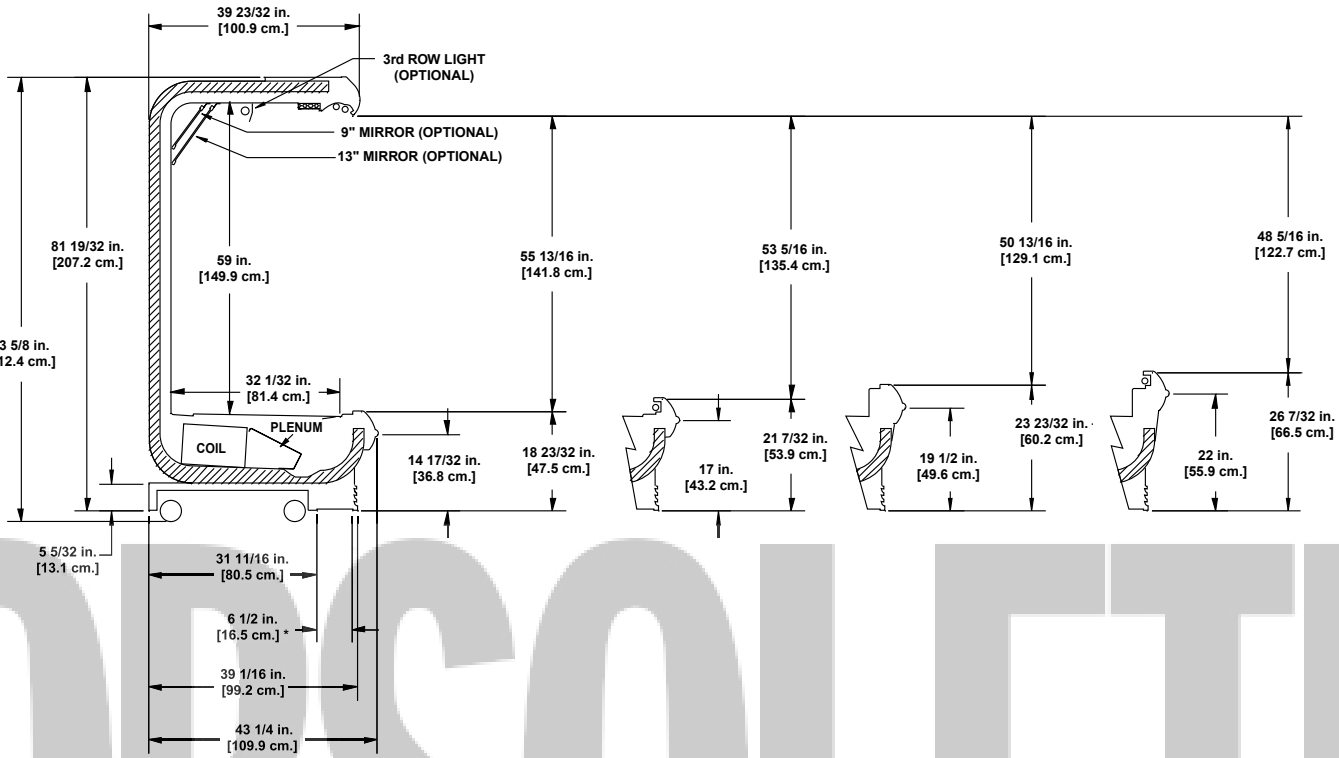

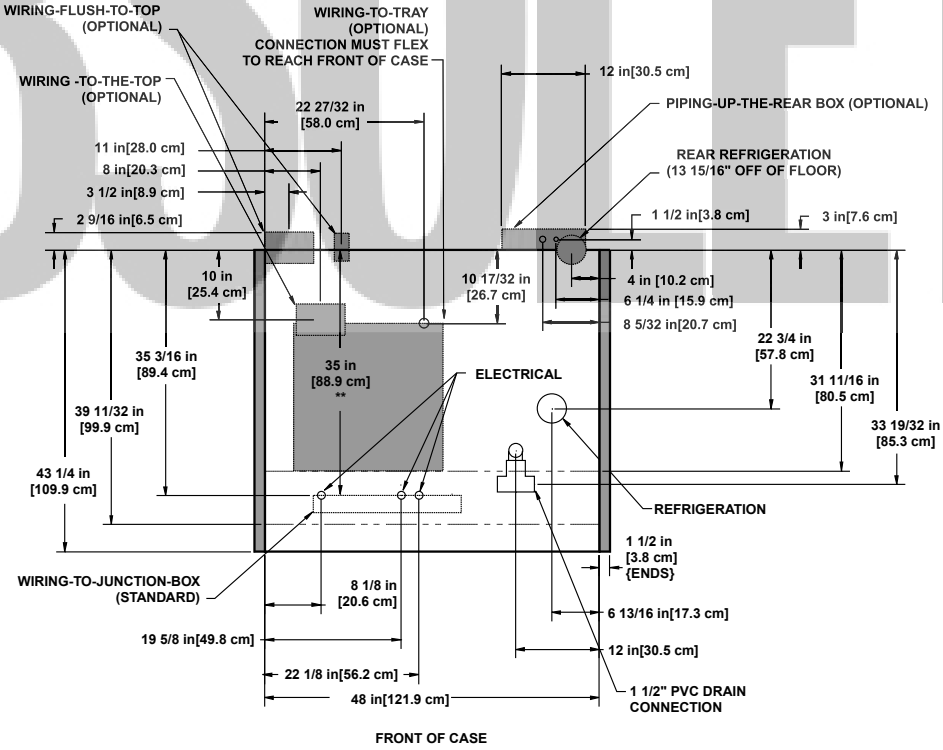

NOTES:

* STUB-UP AREA
** RECOMMENDED STUB-UP CENTERLINE FOR ELECTRICAL AND HUB DRAINS

- ENDS ADD APPROXIMATELY 1 INCH TO CASE HEIGHT
- WIRING-TO-THE-TOP- ADDS APPROXIMATELY 1 INCH TO CASE HEIGHT
- A 2" MINIMUM AIR GAP IS REQUIRED BETWEEN THE REAR OF THE CASE AND A WALL (WHEN THE CASE IS PIPED TO THE REAR A 3" TO 4" GAP MAY BE REQUIRED)
- BACK PANELS ADD APPROXIMATELY 1" TO THE REAR OF THE CASE
- SUCTION LINE 7/8", LIQUID LINE - 5/8"

OBSOLETE

O5DM
(PRODUCE CONVERSION)

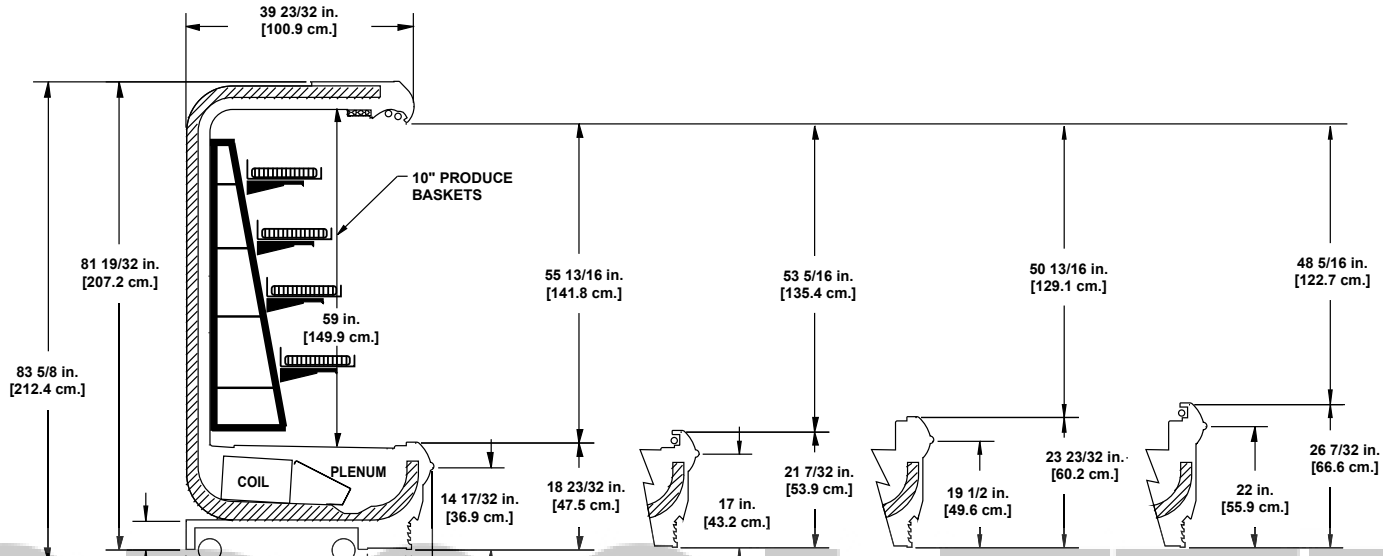

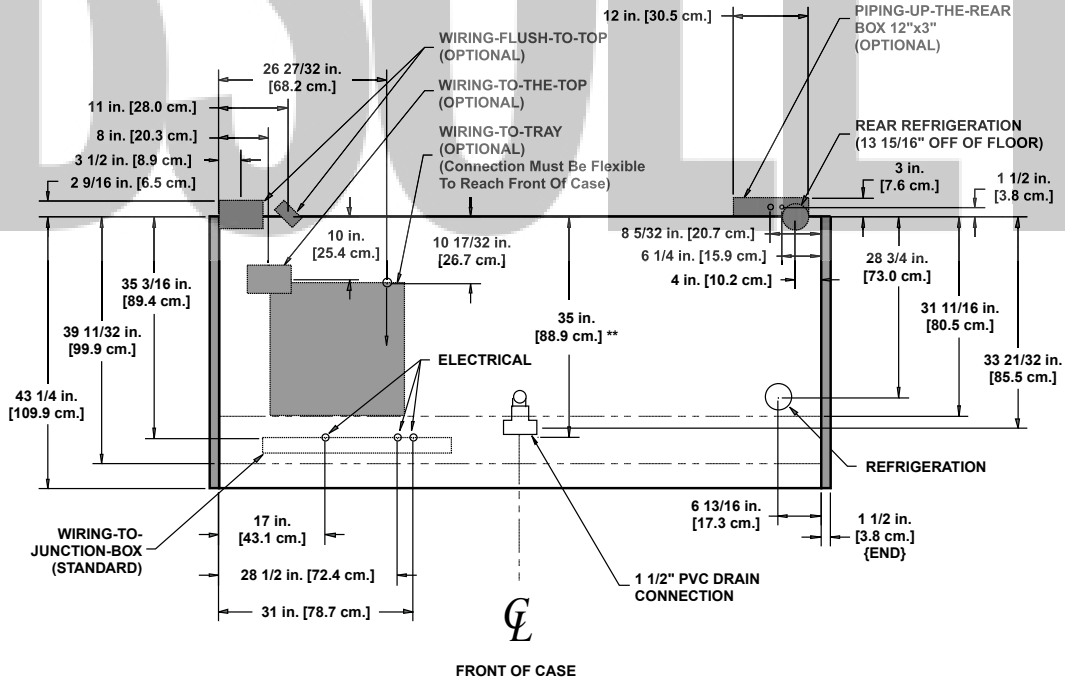

NOTES:

* STUB-UP AREA
** RECOMMENDED STUB-UP CENTERLINE FOR ELECTRICAL AND HUB DRAINS

- ENDS ADD APPROXIMATELY 1 INCH TO CASE HEIGHT
- WIRING-TO-THE-TOP- ADDS APPROXIMATELY 1 INCH TO CASE HEIGHT
- A 2" MINIMUM AIR GAP IS REQUIRED BETWEEN THE REAR OF THE CASE AND A WALL (WHEN THE CASE IS PIPED TO THE REAR A 3" TO 4" GAP MAY BE REQUIRED)
- BACK PANELS ADD APPROXIMATELY 1" TO THE REAR OF THE CASE
- SUCTION LINE 7/8", LIQUID LINE - 5/8"

OBSOLETE

Narrow Multi-Deck Dairy Merchandisers

ON5DM - 6', 8', & 12' narrow dairy

Electrical Data

Model		Fans per Case	Standard Fans 120 Volts Amps	Standard Fans 120 Volts Watts	High Efficiency Fans 120 Volts Amps	High Efficiency Fans 120 Volts Watts	Anti-Condensate Heaters 120 Volts Amps	Anti-Condensate Heaters 120 Volts Watts	Defrost Heaters 208 Volts Amps	Defrost Heaters 208 Volts Watts	Defrost Heaters 240 Volts Amps	Defrost Heaters 240 Volts Watts
ON5DM Non-lighted Fronts/ Lighted Fronts	6'	3	1.50	90	1.50	51	- - -[1]	- - -	2.88	600	3.33	798
	8'	4	2.00	120	2.00	69	- - -	- - -	3.85	800	4.44	1065
	12'	5	2.50	150	2.50	85	- - -	- - -	5.77	1200	6.67	1600

[1] NOTE: - - - not an option on this case model.

Lighting Data

Model		Typical per Light Row 120 Volts Amps	Typical per Light Row 120 Volts Watts	Maximum Lighting 120 Volts Amps	Maximum Lighting 120 Volts Watts
ON5DM	6'	0.57	68	4.47	536
	8'	0.57	68	4.47	536
	12'	0.77	92	6.61	793

OBSOLETE

Guidelines & Control Settings

Model	Front Sill Heights	BTUH/ft[2]	Evaporator (°F)	Discharge Air (°F)	Average Product (°F)	Return Air (°F)	Discharge Air Velocity[3] (FPM)
ON5DM	18"	1815	17	32	35	47	215
	21"	1770	17	31	34	44	215
	27"	1685	17	31	33	40	215

[2] BTUH's/ft listed are for parallel operation. Conventional ratings may be approximated by multiplying listed rating by 1.04.

[3] Average discharge air velocity at peak of defrost.

Defrost Controls

Model	Defrosts Per Day	Electric Defrost Fail-safe (min)	Electric Defrost Termination Temp. (°F)	Timed Off Defrost Fail-safe (min)	Timed Off Defrost Termination Temp. (°F)	Hot Gas Defrost Fail-safe (min)	Hot Gas Defrost Termination Temp. (°F)	Reverse Air Defrost Fail-safe (min)	Reverse Air Defrost Termination Temp. (°F)
ON5DM	4	32	47	42	44	26	47	42	52

Medium Temperature Defrost Schedule

No. Per Day	Hours
1	12 midnight
2	12 am - 12 pm
3	6 am - 2 pm - 10 pm
4	12 - 6 am - 12 - 6 pm

Hill PHOENIX™ EXCELLENCE

A DOVER DIVERSIFIED COMPANY

All measurements are taken per CRMA specifications.

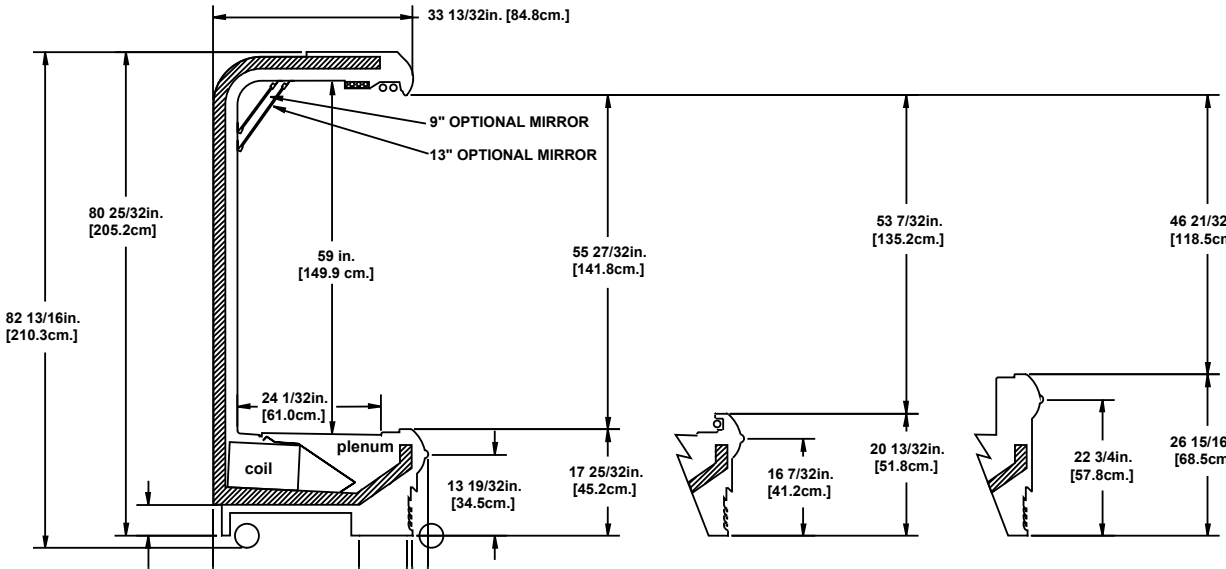

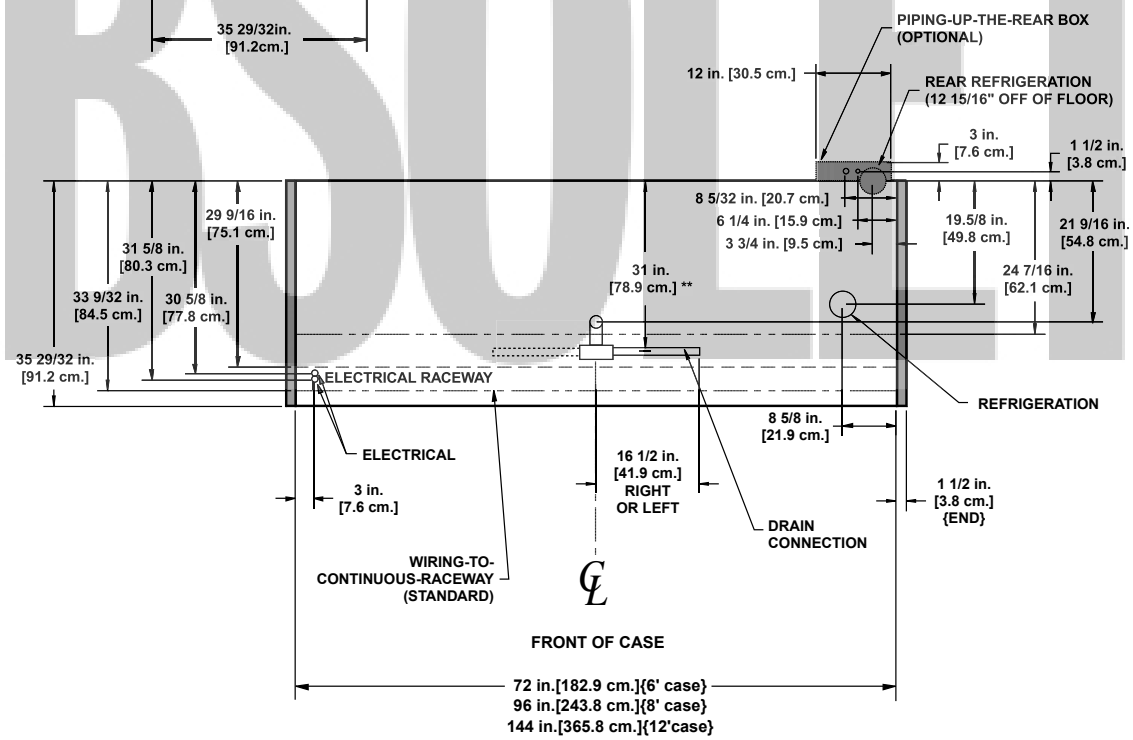

OBSOLETE

NOTES:

* STUB-UP AREA
** RECOMMENDED STUB-UP CENTERLINE FOR ELECTRICAL AND HUB DRAINS

- ENDS ADD APPROXIMATELY 1 INCH TO CASE HEIGHT
- WIRING-TO-THE-TOP- ADDS APPROXIMATELY 1 INCH TO CASE HEIGHT
- A 2" MINIMUM AIR GAP IS REQUIRED BETWEEN THE REAR OF THE CASE AND A WALL (WHEN THE CASE IS PIPED TO THE REAR A 3" TO 4" GAP MAY BE REQUIRED)
- BACK PANELS ADD APPROXIMATELY 1" TO THE REAR OF THE CASE
- SUCTION LINE 7/8", LIQUID LINE - 5/8"

High Multi-Deck Dairy/Deli/Produce Merchandisers

O5DMH - 4', 6', 8', & 12' dairy/deli/produce

Electrical Data

Model		Fans per Case	Standard Fan 120 Volts Amps	Standard Fan 120 Volts Watts	High Efficiency Fans 120 Volts Amps	High Efficiency Fans 120 Volts Watts	Anti-Condensate Heaters 120 Volts Amps	Anti-Condensate Heaters 120 Volts Watts	Defrost Heaters 208 Volts Amps	Defrost Heaters 208 Volts Watts	Defrost Heaters 240 Volts Amps	Defrost Heaters 240 Volts Watts
O5DMH	4'	2	1.00	60	1.00	34	- - -[1]	- - -	1.92	400	2.22	532
	6'	3	1.50	90	1.50	51	- - -	- - -	2.88	600	3.33	798
	8'	4	2.00	120	2.00	69	- - -	- - -	3.85	800	4.44	1065
	12'	5	2.50	150	2.50	85	- - -	- - -	5.78	1200	6.67	1600

[1] NOTE: - - - not an option on this case model.

Lighting Data

Model		Typical per Light Row 120 Volts Amps	Typical per Light Row 120 Volts Watts	Maximum Lighting 120 Volts Amps	Maximum Lighting 120 Volts Watts
O5DMH	4'	0.57	68	3.55	426
	6'	0.57	68	4.47	536
	8'	0.57	68	4.47	536
	12'	0.77	92	6.61	793

OBSOLETE

Guidelines & Control Settings

Model	Front Sill Heights	BTUH/ft[2]	Evaporator (°F)	Discharge Air (°F)	Average Product (°F)	Return Air (°F)	Discharge Air Velocity[3] (FPM)
O5DMH Deli	21"	1620	17	31	35	43	250
	23"	1570	17	31	34	43	250
	26"	1540	17	31	34	43	250
O5DMH Dairy Cut Produce	18"	1555	22	35	37	47	265
	21"	1500	22	35	37	47	265
	23"	1470	22	35	37	47	265
	26"	1440	22	35	37	47	265

[2] BTUH's/ft listed are for parallel operation. Conventional ratings may be approximated by multiplying listed rating by 1.04.

[3] Average discharge air velocity at peak of defrost.

Defrost Controls

Model	Defrosts Per Day	Electric Defrost Fail-safe (min)	Electric Defrost Termination Temp. (°F)	Timed Off Defrost Fail-safe (min)	Timed Off Defrost Termination Temp. (°F)	Hot Gas Defrost Fail-safe (min)	Hot Gas Defrost Termination Temp. (°F)	Reverse Air Defrost Fail-safe (min)	Reverse Air Defrost Termination Temp. (°F)
O5DMH Dairy/Deli/Produce	3	32	47	42	44	26	47	42	52

Medium Temperature Defrost Schedule

No. Per Day	Hours
1	12 midnight
2	12 am - 12 pm
3	6 am - 2 pm - 10 pm
4	12 - 6 am - 12 - 6 pm

Hill PHOENIX™ EXCELLENCE

A DOVER DIVERSIFIED COMPANY

All measurements are taken per CRMA specifications.

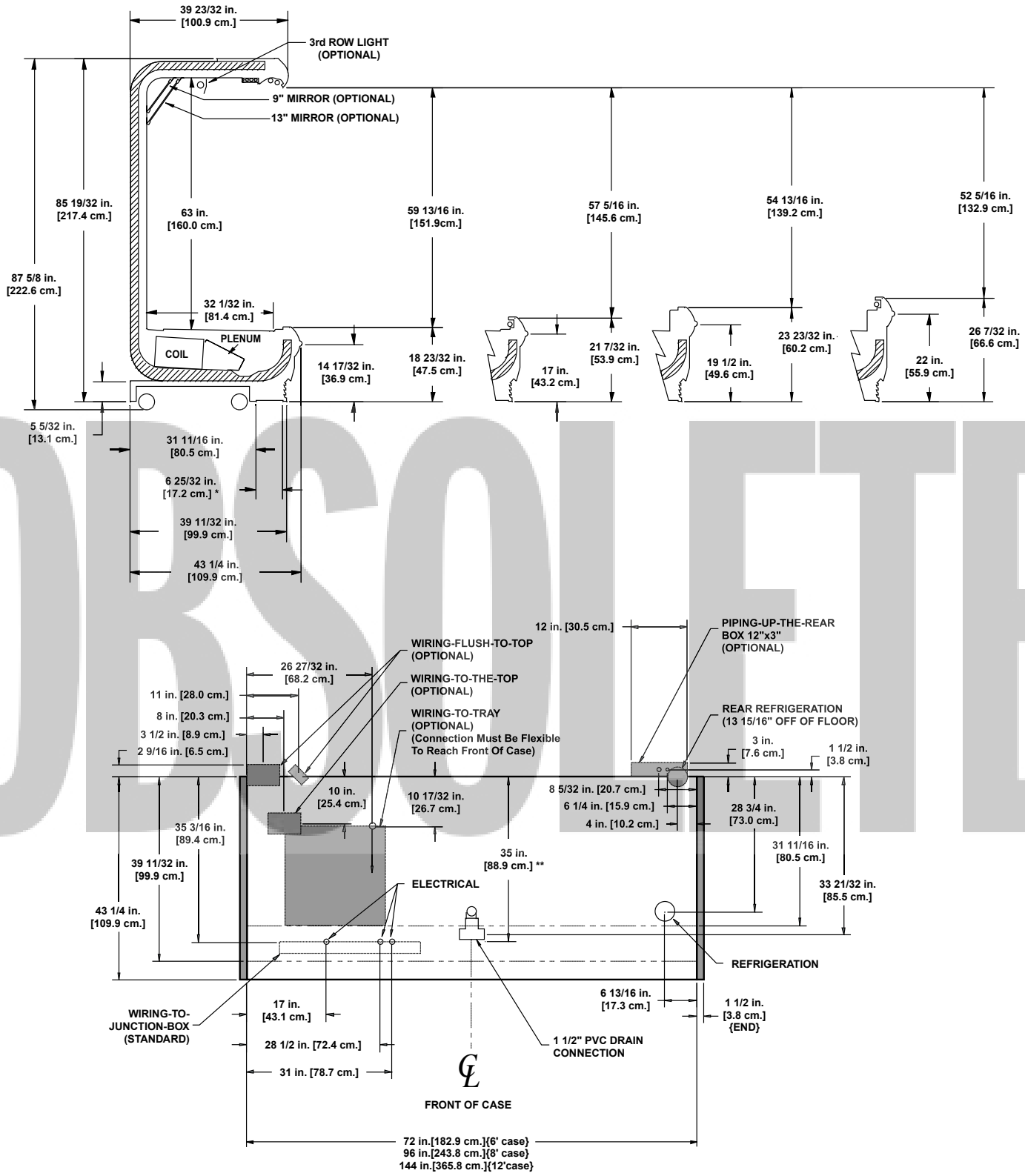

OBSOLETE

NOTES:

* STUB-UP AREA
** RECOMMENDED STUB-UP CENTERLINE FOR ELECTRICAL AND HUB DRAINS

- ENDS ADD APPROXIMATELY 1 INCH TO CASE HEIGHT
- WIRING-TO-THE-TOP- ADDS APPROXIMATELY 1 INCH TO CASE HEIGHT
- A 2" MINIMUM AIR GAP IS REQUIRED BETWEEN THE REAR OF THE CASE AND A WALL (WHEN THE CASE IS PIPED TO THE REAR A 3" TO 4" GAP MAY BE REQUIRED)
- BACK PANELS ADD APPROXIMATELY 1" TO THE REAR OF THE CASE
- SUCTION LINE 7/8", LIQUID LINE - 5/8"

Multi-Deck Frozen Food Merchandisers

O5Z - 6', 8', & 12' frozen food

Electrical Data

		Fans per Case				Standard Fans		High Efficiency Fans		Anti-Condensate[2] Heaters		Defrost Heaters			
						120 Volts		120 Volts		120 Volts		208 Volts		240 Volts	
		Pri.[1]	Sec.	Amb.	Total	Amps	Watts	Amps	Watts	Amps	Watts	Amps[3]	Watts	Amps[3]	Watts
O5Z	6'	4	2	2	8	4.56	280	2.04	187	2.25	270	10.00	3600	11.50	4794
	8'	5	3	2	10	5.70	352	2.55	233	3.10	344	13.30	4800	15.40	6390
	12'	7	4	3	14	7.98	490	3.57	327	4.68	562	20.00	7200	23.00	9585

[1] Pri.=Primary, Sec.=Secondary, Amb.=Ambient
[2] Cases equipped with windowed ends add 1.85 amps per end.
[3] 3 phase load. Figure given is maximum amps per phase.

OBSOLETE

Lighting Data

		Typical per Light Row		Maximum Lighting	
		120 Volts		120 Volts	
		Amps	Watt	Amps	Watts
O5Z	6'	0.57	68	1.71	205
	8'	0.57	68	1.71	205
	12'	0.77	92	2.31	277

Air Defrost Option

		Defrost Heaters	
		120 Volts	
		Amps	Watts
O5Z	6'	---[4]	---
	8'	6.69	803
	12'	9.20	1104

[4] NOTE: --- not an option on this case model.

Guidelines & Control Settings

Model	BTUH/ft[5]	Evaporator (°F)	Discharge Air (°F)	Average Product (°F)	Return Air (°F)	Discharge Air Velocity[6] (FPM)		
						Pri.	Sec.	Amb.
O5Z	1840	-18	-5	0	0	650	425	275

[5] BTUH's/ft listed are for parallel operation. Conventional ratings may be approximated by multiplying listed rating by 1.04.
[6] Average discharge air velocity at peak of defrost.

Defrost Controls

Model	Defrosts per Day	Electric Defrost		Timed Off Defrost		Hot Gas Defrost		Reverse Air Defrost	
		Fail-safe (min)	Termination Temp. (°F)	Fail-safe (min)	Termination Temp. (°F)	Fail-safe (min)	Termination Temp. (°F)	Fail-safe (min)	Termination Temp. (°F)
O5Z	2	34	50	---	---	24	47	50	50

Low Temperature Defrost Schedule

No. Per Day	Hours
1	10 pm
2	6 am - 10 pm**

** Or immediately after store closing hour

Hill PHOENIX EXCELLENCE™

A DOVER DIVERSIFIED COMPANY

All measurements are taken per CRMA specifications.

OBSOLETE

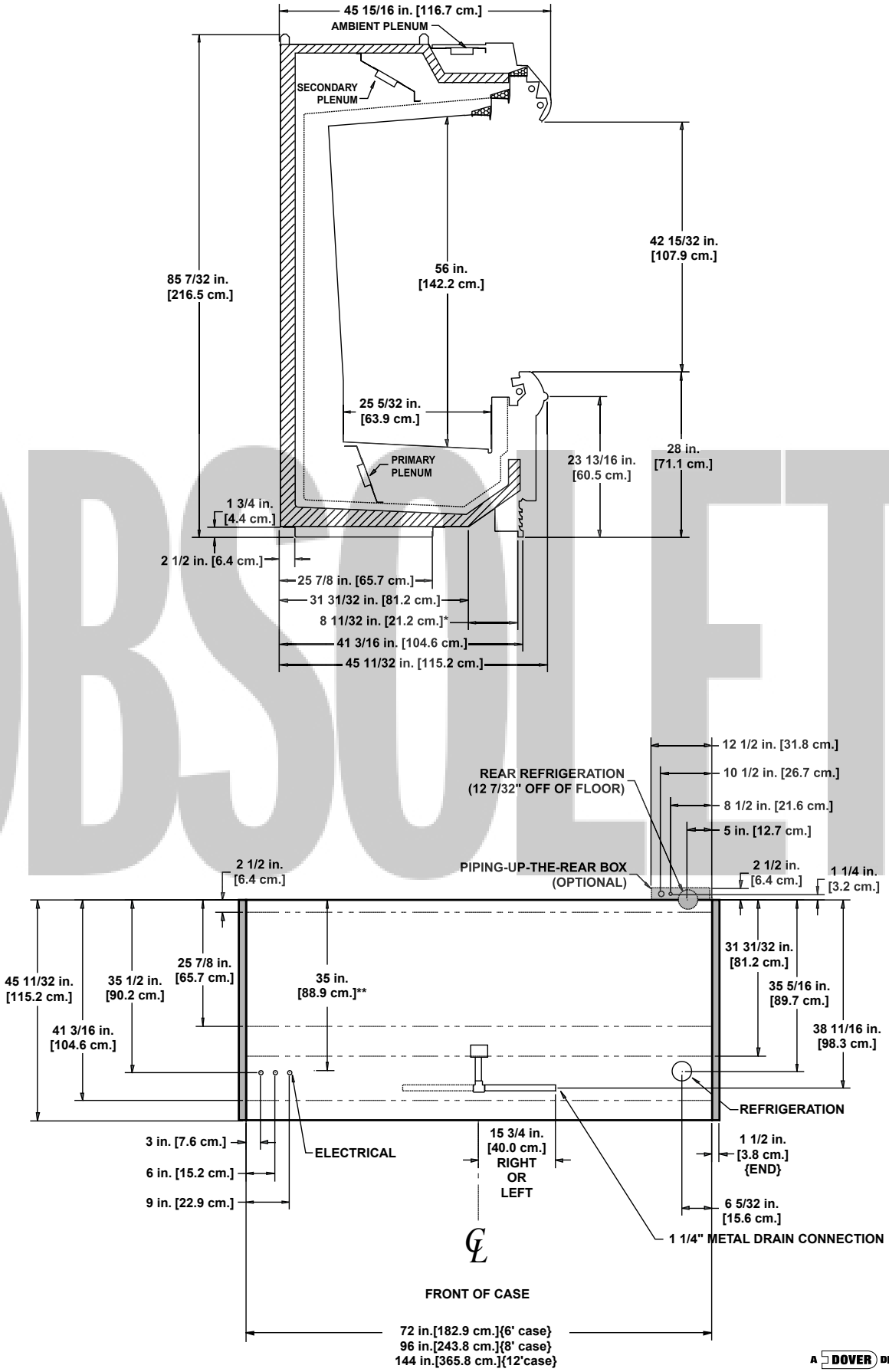
45 15/16 in. [116.7 cm.]
AMBIENT PLENUM
SECONDARY PLENUM
85 7/32 in. [216.5 cm.]
56 in. [142.2 cm.]
42 15/32 in. [107.9 cm.]
25 5/32 in. [63.9 cm.]
PRIMARY PLENUM
23 13/16 in. [60.5 cm.]
28 in. [71.1 cm.]
1 3/4 in. [4.4 cm.]
2 1/2 in. [6.4 cm.]
25 7/8 in. [65.7 cm.]
31 31/32 in. [81.2 cm.]
8 11/32 in. [21.2 cm.]*
41 3/16 in. [104.6 cm.]
45 11/32 in. [115.2 cm.]
12 1/2 in. [31.8 cm.]
10 1/2 in. [26.7 cm.]
8 1/2 in. [21.6 cm.]
5 in. [12.7 cm.]
REAR REFRIGERATION (12 7/32" OFF OF FLOOR)
PIPING-UP-THE-REAR BOX (OPTIONAL)
2 1/2 in. [6.4 cm.]
2 1/2 in. [6.4 cm.]
1 1/4 in. [3.2 cm.]
45 11/32 in. [115.2 cm.]
35 1/2 in. [90.2 cm.]
25 7/8 in. [65.7 cm.]
35 in. [88.9 cm.]**
41 3/16 in. [104.6 cm.]
31 31/32 in. [81.2 cm.]
35 5/16 in. [89.7 cm.]
38 11/16 in. [98.3 cm.]
REFRIGERATION
3 in. [7.6 cm.]
6 in. [15.2 cm.]
9 in. [22.9 cm.]
ELECTRICAL
15 3/4 in. [40.0 cm.] RIGHT OR LEFT
1 1/2 in. [3.8 cm.] {END}
6 5/32 in. [15.6 cm.]
1 1/4" METAL DRAIN CONNECTION
FRONT OF CASE
72 in.[182.9 cm.]{6' case}
96 in.[243.8 cm.]{8' case}
144 in.[365.8 cm.]{12'case}

Multi-Deck Meat Merchandisers

OHM - 6', 8', & 12' high meat

Electrical Data

Model		Fans per Case	Standard Fans 120 Volts Amps	Standard Fans 120 Volts Watts	High Efficiency Fans 120 Volts Amps	High Efficiency Fans 120 Volts Watts	Anti-Condensate Heaters 120 Volts Amps	Anti-Condensate Heaters 120 Volts Watts	Defrost Heaters 208 Volts Amps	Defrost Heaters 208 Volts Watts	Defrost Heaters 240 Volts Amps	Defrost Heaters 240 Volts Watts
OHM	6'	2	1.00	60	1.00	34	0.40	48	2.88	600	3.33	798
	8'	3	1.50	90	1.50	51	0.58	70	3.85	800	4.44	1065
	12'	4	2.00	120	2.00	69	0.83	100	5.77	1200	6.67	1600

Lighting Data

Model		Typical per Light Row 120 Volts Amps	Typical per Light Row 120 Volts Watts	Maximum Lighting 120 Volts Amps	Maximum Lighting 120 Volts Watts
OHM	6'	0.57	68	3.90	468
	8'	0.57	68	3.90	468
	12'	0.77	92	5.84	701

OBSOLETE

Guidelines & Control Settings

Model	Front Sill Heights	BTUH/ft[1]	Evaporator (°F)	Discharge Air (°F)	Average Product (°F)	Return Air (°F)	Discharge Air Velocity[2] (FPM)
OHM	27"	1448	17	28	35	40	350
	27"	1475	12	28	33	40	350
	31" & 33"	1341	17	28	34	40	350

[1] BTUH's/ft listed are for parallel operation. Conventional ratings may be approximated by multiplying listed rating by 1.04.

[2] Average discharge air velocity at peak of defrost.

Defrost Controls

Model	Defrosts Per Day	Electric Defrost Fail-safe (min)	Electric Defrost Termination Temp. (°F)	Timed Off Defrost Fail-safe (min)	Timed Off Defrost Termination Temp. (°F)	Hot Gas Defrost Fail-safe (min)	Hot Gas Defrost Termination Temp. (°F)	Reverse Air Defrost Fail-safe (min)	Reverse Air Defrost Termination Temp. (°F)
OHM	3	35	47	45	42	26	39	45	55

Medium Temperature Defrost Schedule

No. Per Day	Hours
1	12 midnight
2	12 am - 12 pm
3	6 am - 2 pm - 10 pm
4	12 - 6 am - 12 - 6 pm

Hill PHOENIX EXCELLENCE™

A DOVER DIVERSIFIED COMPANY

All measurements are taken per CRMA specifications.

OBSOLETE

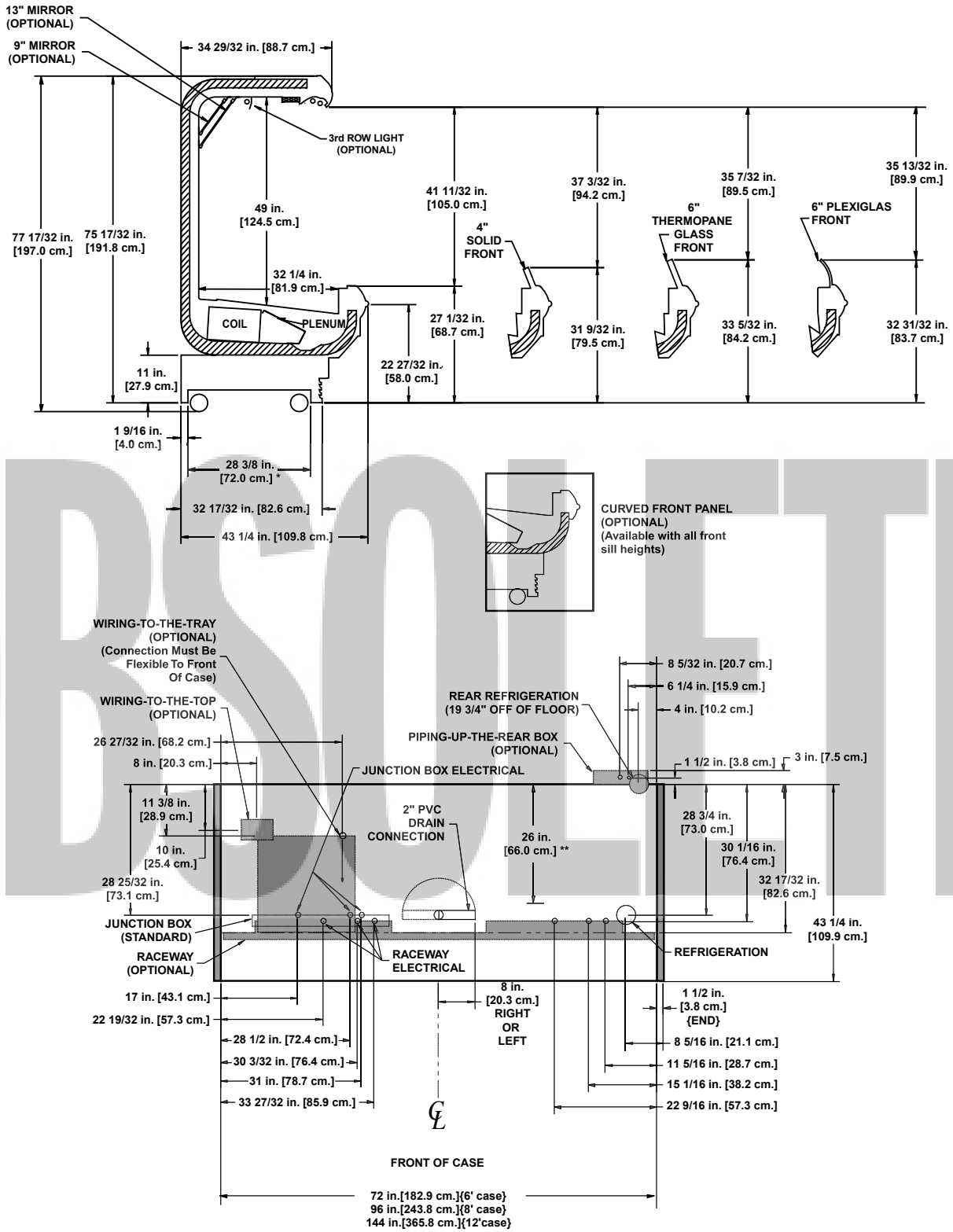

NOTES:

* STUB-UP AREA
** RECOMMENDED STUB-UP CENTERLINE FOR ELECTRICAL AND HUB DRAINS

- ENDS ADD APPROXIMATELY 1 INCH TO CASE HEIGHT
- WIRING-TO-THE-TOP- ADDS APPROXIMATELY 1 INCH TO CASE HEIGHT
- A 2" MINIMUM AIR GAP IS REQUIRED BETWEEN THE REAR OF THE CASE AND A WALL (WHEN THE CASE IS PIPED TO THE REAR A 3" TO 4" GAP MAY BE REQUIRED)
- BACK PANELS ADD APPROXIMATELY 1" TO THE REAR OF THE CASE
- SUCTION LINE 7/8", LIQUID LINE - 5/8"

Narrow Multi-Deck Meat Merchandisers

ONHM - 6', 8', & 12' narrow high meat

Electrical Data

Model		Fans per Case	Standard Fans 120 Volts Amps	Standard Fans 120 Volts Watts	High Efficiency Fans 120 Volts Amps	High Efficiency Fans 120 Volts Watts	Anti-Condensate Heaters 120 Volts Amps	Anti-Condensate Heaters 120 Volts Watts	Defrost Heaters 208 Volts Amps	Defrost Heaters 208 Volts Watts	Defrost Heaters 240 Volts Amps	Defrost Heaters 240 Volts Watts
ONHM	6'	3	1.50	90	1.50	51	- - -[1]	- - -	2.88	600	3.33	798
	8'	4	2.00	120	2.00	69	- - -	- - -	3.85	800	4.44	1065
	12'	5	2.50	150	2.50	85	- - -	- - -	5.77	1200	6.67	1600

[1] NOTE: --- not an option on this case model.

Lighting Data

Model		Typical per Light Row 120 Volts Amps	Typical per Light Row 120 Volts Watts	Maximum Lighting 120 Volts Amps	Maximum Lighting 120 Volts Watts
ONHM	6'	0.57	68	3.90	468
	8'	0.57	68	3.90	468
	12'	0.77	92	5.84	701

OBSOLETE

Guidelines & Control Settings

Model	Front Sill Heights	BTUH/ft[2]	Evaporator (°F)	Discharge Air (°F)	Average Product (°F)	Return Air (°F)	Discharge Air Velocity[3] (FPM)
ONHM	27"	1325	17	30	35	38	390
	31" & 33"	1225	17	30	35	38	390

[2] BTUH's/ft listed are for parallel operation. Conventional ratings may be approximated by multiplying listed rating by 1.04.

[3] Average discharge air velocity at peak of defrost.

Defrost Controls

Model	Defrosts Per Day	Electric Defrost Fail-safe (min)	Electric Defrost Termination Temp. (°F)	Timed Off Defrost Fail-safe (min)	Timed Off Defrost Termination Temp. (°F)	Hot Gas Defrost Fail-safe (min)	Hot Gas Defrost Termination Temp. (°F)	Reverse Air Defrost Fail-safe (min)	Reverse Air Defrost Termination Temp. (°F)
ONHM	3	35	47	45	42	26	39	45	55

Medium Temperature Defrost Schedule

No. Per Day	Hours
1	12 midnight
2	12 am - 12 pm
3	6 am - 2 pm - 10 pm
4	12 - 6 am - 12 - 6 pm

All measurements are taken per CRMA specifications.

Hill PHOENIX EXCELLENCE™

A DOVER DIVERSIFIED COMPANY

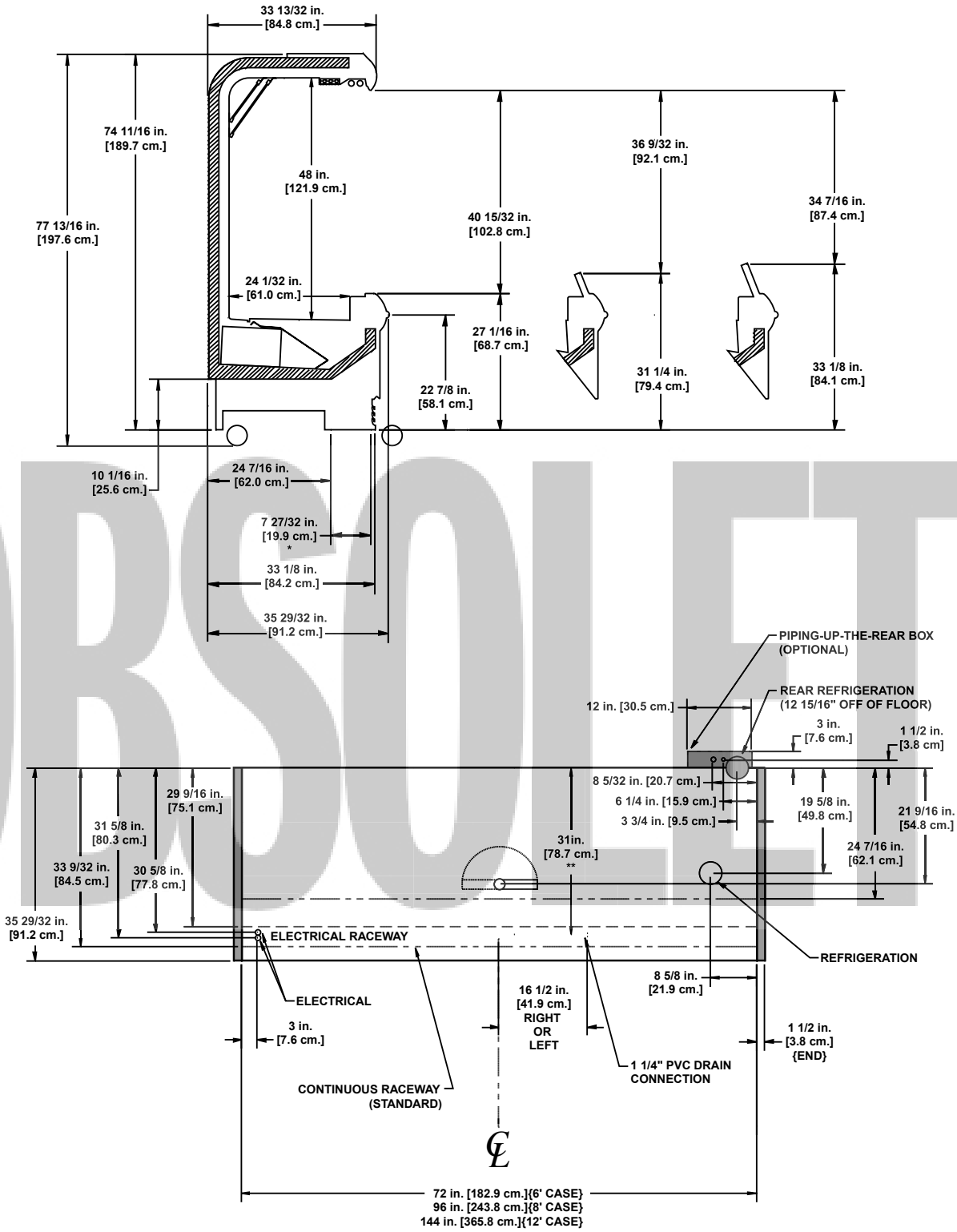

OBSOLETE

NOTES:

* STUB-UP AREA
** RECOMMENDED STUB-UP CENTERLINE FOR ELECTRICAL AND HUB DRAINS

- ENDS ADD APPROXIMATELY 1 INCH TO CASE HEIGHT
- WIRING-TO-THE-TOP- ADDS APPROXIMATELY 1 INCH TO CASE HEIGHT
- A 2" MINIMUM AIR GAP IS REQUIRED BETWEEN THE REAR OF THE CASE AND A WALL (WHEN THE CASE IS PIPED TO THE REAR A 3" TO 4" GAP MAY BE REQUIRED)
- BACK PANELS ADD APPROXIMATELY 1" TO THE REAR OF THE CASE
- SUCTION LINE 7/8", LIQUID LINE - 5/8"

High Multi-Deck Meat Merchandisers

OHMH- 6’, 8’, & 12’ high meat

Electrical Data

Model		Fans per Case	Standard Fans 120 Volts Amps	Standard Fans 120 Volts Watts	High Efficiency Fans 120 Volts Amps	High Efficiency Fans 120 Volts Watts	Anti-Condensate Heaters 120 Volts Amps	Anti-Condensate Heaters 120 Volts Watts	Defrost Heaters 208 Volts Amps	Defrost Heaters 208 Volts Watts	Defrost Heaters 240 Volts Amps	Defrost Heaters 240 Volts Watts
OHMH	6’	3	1.50	90	0.90	60	0.80	96	2.88	600	3.33	798
	8’	4	2.00	120	1.20	80	1.15	138	3.85	800	4.44	1065
	12’	5	2.50	150	1.50	100	1.67	200	5.77	1200	6.67	1600

Lighting Data

Model		Typical per Light Row 120 Volts Amps	Typical per Light Row 120 Volts Watts	Maximum Lighting 120 Volts Amps	Maximum Lighting 120 Volts Watts
OHMH	6’	0.57	68	4.47	536
	8’	0.57	68	4.47	536
	12’	0.77	92	6.61	793

OBSOLETE

Guidelines & Control Settings

Model	Front Sill Heights	BTUH/ft[1]	Evaporator (°F)	Discharge Air (°F)	Average Product (°F)	Return Air (°F)	Discharge Air Velocity[2] (FPM)
OHMH	27”	1600	12	28	33	37	330
	31” & 33”	1500	12	28	33	37	330

[1] BTUH's/ft listed are for parallel operation. Conventional ratings may be approximated by multiplying listed rating by 1.04.

[2] Average discharge air velocity at peak of defrost.

Defrost Controls

Model	Defrosts Per Day	Electric Defrost Fail-safe (min)	Electric Defrost Termination Temp. (°F)	Timed Off Defrost Fail-safe (min)	Timed Off Defrost Termination Temp. (°F)	Hot Gas Defrost Fail-safe (min)	Hot Gas Defrost Termination Temp. (°F)	Reverse Air Defrost Fail-safe (min)	Reverse Air Defrost Termination Temp. (°F)
OHMH	4	32	47	44	42	26	39	44	55

Medium Temperature Defrost Schedule

No. Per Day	Hours
1	12 midnight
2	12 am - 12 pm
3	6 am - 2 pm - 10 pm
4	12 - 6 am - 12 - 6 pm

Hill PHOENIX™ EXCELLENCE

A DOVER DIVERSIFIED COMPANY

All measurements are taken per CRMA specifications.

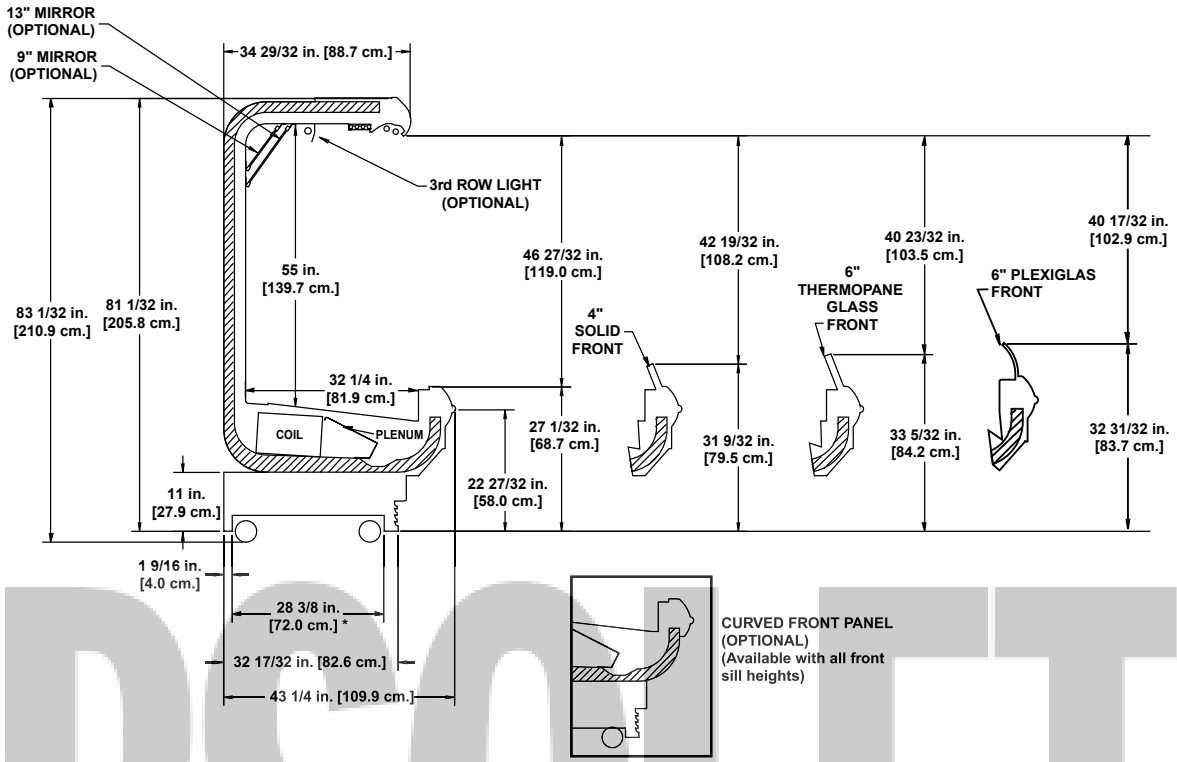

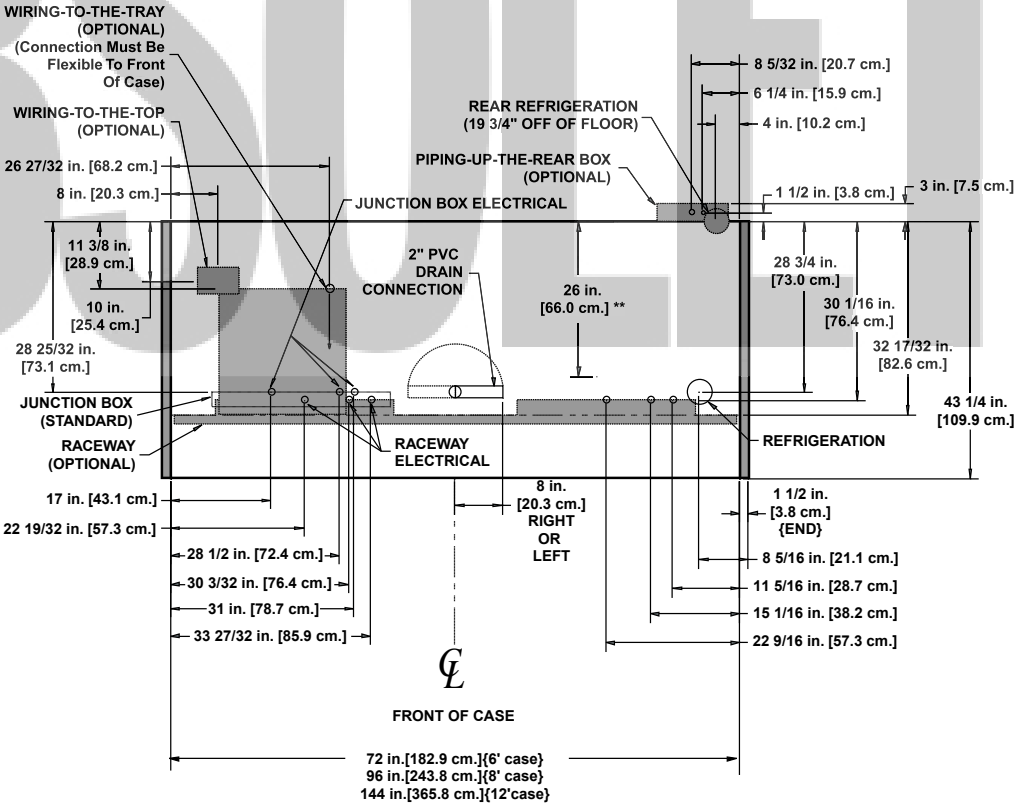

OBSOLETE

NOTES:

* STUB-UP AREA
** RECOMMENDED STUB-UP CENTERLINE FOR ELECTRICAL AND HUB DRAINS

- ENDS ADD APPROXIMATELY 1 INCH TO CASE HEIGHT
- WIRING-TO-THE-TOP- ADDS APPROXIMATELY 1 INCH TO CASE HEIGHT
- A 2" MINIMUM AIR GAP IS REQUIRED BETWEEN THE REAR OF THE CASE AND A WALL (WHEN THE CASE IS PIPED TO THE REAR A 3" TO 4" GAP MAY BE REQUIRED)
- BACK PANELS ADD APPROXIMATELY 1" TO THE REAR OF THE CASE
- SUCTION LINE 7/8", LIQUID LINE - 5/8"

Multi-Deck Produce Merchandisers

OHP - 6’, 8’, & 12’ high produce

Electrical Data

Model		Fans per Case	Standard Fans 120 Volts Amps	Standard Fans 120 Volts Watts	High Efficiency Fans 120 Volts Amps	High Efficiency Fans 120 Volts Watts	Anti-Condensate Heaters[1] 120 Volts Amps	Anti-Condensate Heaters[1] 120 Volts Watts	Defrost Heaters 208 Volts Amps	Defrost Heaters 208 Volts Watts	Defrost Heaters 240 Volts Amps	Defrost Heaters 240 Volts Watts
OHP	6’	2	1.00	60	0.64	34	0.40	48	2.88	600	3.33	798
	8’	3	1.50	90	0.96	51	0.58	70	3.85	800	4.44	1065
	12’	4	2.00	120	1.28	69	0.83	100	5.77	1200	6.67	1600

[1] Anti-condensate heater data for reduced (cut produce) temperature option only.

Lighting Data

Model		Typical per Light Row 120 Volts Amps	Typical per Light Row 120 Volts Watts	Maximum Lighting 120 Volts Amps	Maximum Lighting 120 Volts Watts
OHP	6’	0.57	68	3.90	468
	8’	0.57	68	3.90	468
	12’	0.77	92	5.84	701

OBSOLETE

Guidelines & Control Settings

Model	Front Sill Heights	BTUH/ft[2]	Evaporator (°F)	Discharge Air (°F)	Average Product (°F)	Return Air (°F)	Discharge Air Velocity[3] (FPM)
OHP Bulk Produce	27”	855	27	36	46	48	250
OHP Cut Produce	27”	1215	22	31	38	45	440

[2] BTUH's/ft listed are for parallel operation. Conventional ratings may be approximated by multiplying listed rating by 1.04.

[3] Average discharge air velocity at peak of defrost.

Defrost Controls

Model	Defrosts Per Day	Electric Defrost Fail-safe (min)	Electric Defrost Termination Temp. (°F)	Timed Off Defrost Fail-safe (min)	Timed Off Defrost Termination Temp. (°F)	Hot Gas Defrost Fail-safe (min)	Hot Gas Defrost Termination Temp. (°F)	Reverse Air Defrost Fail-safe (min)	Reverse Air Defrost Termination Temp. (°F)
OHP Bulk Produce	2	- - -[4]	- - -	56	40	- - -	- - -	56	40
OHP Cut Produce	3	24	48	30	48	20	39	30	48

[4] NOTE: - - - not an option on this case model.

Medium Temperature Defrost Schedule

No. Per Day	Hours
1	12 midnight
2	12 am - 12 pm
3	6 am - 2 pm - 10 pm
4	12 - 6 am - 12 - 6 pm

Hill PHOENIX EXCELLENCE™

A DOVER DIVERSIFIED COMPANY

All measurements are taken per CRMA specifications.

OBSOLETE

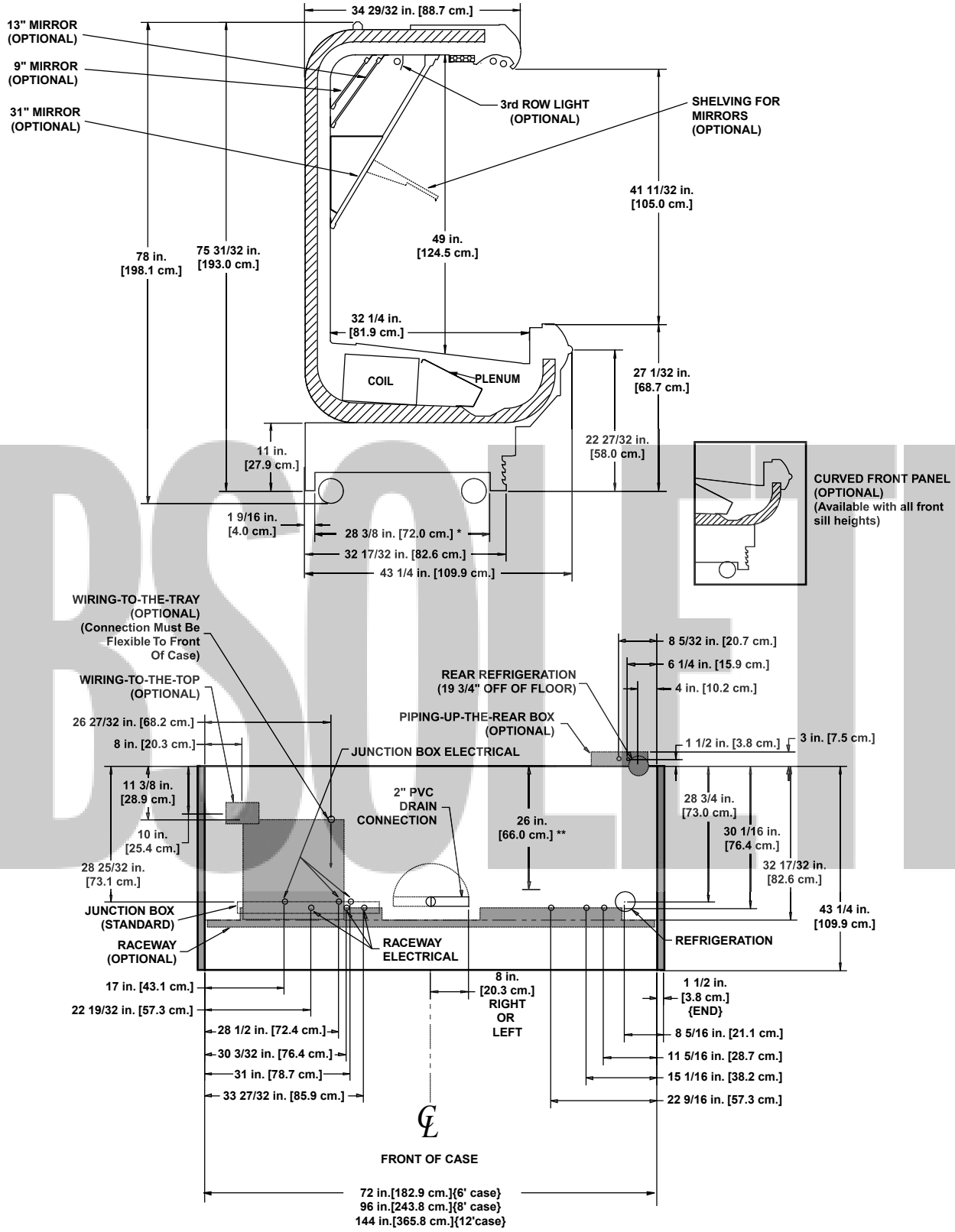

NOTES:

* STUB-UP AREA
** RECOMMENDED STUB-UP CENTERLINE FOR ELECTRICAL AND HUB DRAINS

- ENDS ADD APPROXIMATELY 1 INCH TO CASE HEIGHT
- WIRING-TO-THE-TOP- ADDS APPROXIMATELY 1 INCH TO CASE HEIGHT
- A 2" MINIMUM AIR GAP IS REQUIRED BETWEEN THE REAR OF THE CASE AND A WALL (WHEN THE CASE IS PIPED TO THE REAR A 3" TO 4" GAP MAY BE REQUIRED)
- BACK PANELS ADD APPROXIMATELY 1" TO THE REAR OF THE CASE
- SUCTION LINE 7/8", LIQUID LINE - 5/8"

High Multi-Deck Produce Merchandisers

OHPH- 6’, 8’, & 12’ high produce

Electrical Data

Model		Fans per Case	Standard Fans 120 Volts Amps	Standard Fans 120 Volts Watts	High Efficiency Fans 120 Volts Amps	High Efficiency Fans 120 Volts Watts	Anti-Condensate Heaters 120 Volts Amps	Anti-Condensate Heaters 120 Volts Watts	Defrost Heaters 208 Volts Amps	Defrost Heaters 208 Volts Watts	Defrost Heaters 240 Volts Amps	Defrost Heaters 240 Volts Watts
OHPH	6’	3	1.50	90	0.90	60	0.80	96	2.88	600	3.33	798
	8’	4	2.00	120	1.20	80	1.15	138	3.85	800	4.44	1065
	12’	5	2.50	150	1.50	100	1.67	200	5.77	1200	6.67	1600

Lighting Data

Model		Typical per Light Row 120 Volts Amps	Typical per Light Row 120 Volts Watts	Maximum Lighting 120 Volts Amps	Maximum Lighting 120 Volts Watts
OHPH	6’	0.57	68	4.47	536
	8’	0.57	68	4.47	536
	12’	0.77	92	6.61	793

OBSOLETE

Guidelines & Control Settings

Model	Front Sill Heights	BTUH/ft[1]	Evaporator (°F)	Discharge Air (°F)	Average Product (°F)	Return Air (°F)	Discharge Air Velocity[2] (FPM)
OHPH	27”	1460	17	30	37	45	315

[1] BTUH's/ft listed are for parallel operation. Conventional ratings may be approximated by multiplying listed rating by 1.04.

[2] Average discharge air velocity at peak of defrost.

Defrost Controls

Model	Defrosts Per Day	Electric Defrost Fail-safe (min)	Electric Defrost Termination Temp. (°F)	Timed Off Defrost Fail-safe (min)	Timed Off Defrost Termination Temp. (°F)	Hot Gas Defrost Fail-safe (min)	Hot Gas Defrost Termination Temp. (°F)	Reverse Air Defrost Fail-safe (min)	Reverse Air Defrost Termination Temp. (°F)
OHPH	3	35	52	50	50	26	39	50	50

Medium Temperature Defrost Schedule

No. Per Day	Hours
1	12 midnight
2	12 am - 12 pm
3	6 am - 2 pm - 10 pm
4	12 - 6 am - 12 - 6 pm

Hill PHOENIX™ EXCELLENCE

A DOVER DIVERSIFIED COMPANY

All measurements are taken per CRMA specifications.

OBSOLETE

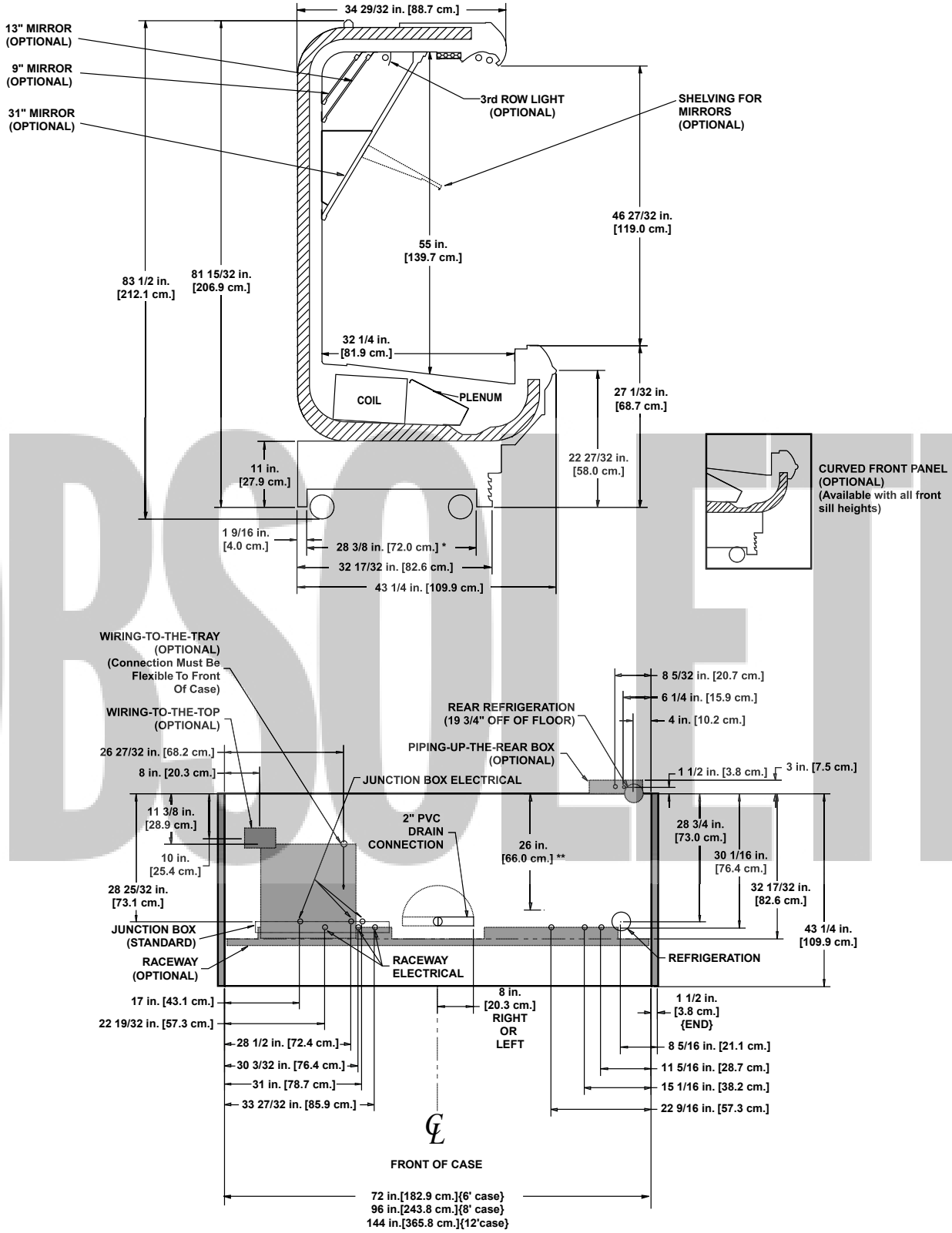

NOTES:

* STUB-UP AREA
** RECOMMENDED STUB-UP CENTERLINE FOR ELECTRICAL AND HUB DRAINS

- ENDS ADD APPROXIMATELY 1 INCH TO CASE HEIGHT
- WIRING-TO-THE-TOP- ADDS APPROXIMATELY 1 INCH TO CASE HEIGHT
- A 2" MINIMUM AIR GAP IS REQUIRED BETWEEN THE REAR OF THE CASE AND A WALL (WHEN THE CASE IS PIPED TO THE REAR A 3" TO 4" GAP MAY BE REQUIRED)
- BACK PANELS ADD APPROXIMATELY 1" TO THE REAR OF THE CASE
- SUCTION LINE 7/8", LIQUID LINE - 5/8"

Multi-Deck Narrow Dairy/Deli/Meat Merchandisers

ONU- 4'/47" & 6'/71" narrow dairy/deli/meat

Electrical Data

Model		Fans per Case	Standard Fans 120 Volts Amps	Standard Fans 120 Volts Watts	High Efficiency Fans 120 Volts Amps	High Efficiency Fans 120 Volts Watts	Anti-Condensate Heaters 120 Volts Amps	Anti-Condensate Heaters 120 Volts Watts	Defrost Heaters 208 Volts Amps	Defrost Heaters 208 Volts Watts	Defrost Heaters 240 Volts Amps	Defrost Heaters 240 Volts Watts
ONU	4'/47"	2	1.00	60	1.00	34	- - -[1]	- - -	1.92	400	2.22	532
	6'/71"	3	1.50	90	1.50	51	- - -	- - -	2.88	600	3.33	798

[1] NOTE: - - - not an option on this case model.

Lighting Data

Model		Typical per Light Row 120 Volts Amps	Typical per Light Row 120 Volts Watts	Maximum Lighting 120 Volts Amps	Maximum Lighting 120 Volts Watts
ONU	4'/47"	0.57	68	2.06	247
	6'/71"	0.77	92	3.90	468

OBSOLETE

Guidelines & Control Settings

Model	BTUH/ft[2]	Evaporator (°F)	Discharge Air (°F)	Average Product (°F)	Return Air (°F)	Discharge Air Velocity[3] (FPM)
ONU	1450	17	30	34	40	310

[2] BTUH's/ft listed are for parallel operation. Conventional ratings may be approximated by multiplying listed rating by 1.04.

[3] Average discharge air velocity at peak of defrost.

Defrost Controls

Model	Defrosts Per Day	Electric Defrost Fail-safe (min)	Electric Defrost Termination Temp. (°F)	Timed Off Defrost[4] Fail-safe (min)	Timed Off Defrost[4] Termination Temp. (°F)	Hot Gas Defrost Fail-safe (min)	Hot Gas Defrost Termination Temp. (°F)	Reverse Air Defrost Fail-safe (min)	Reverse Air Defrost Termination Temp. (°F)
ONU	4	35	47	45	47	25	47	- - -	- - -

[4] Timed Off Defrost not recommended for Fresh Meat application.

Medium Temperature Defrost Schedule

No. Per Day	Hours
1	12 midnight
2	12 am - 12 pm
3	6 am - 2 pm - 10 pm
4	12 - 6 am - 12 - 6 pm

Hill PHOENIX EXCELLENCE™

A DOVER DIVERSIFIED COMPANY

All measurements are taken per CRMA specifications.

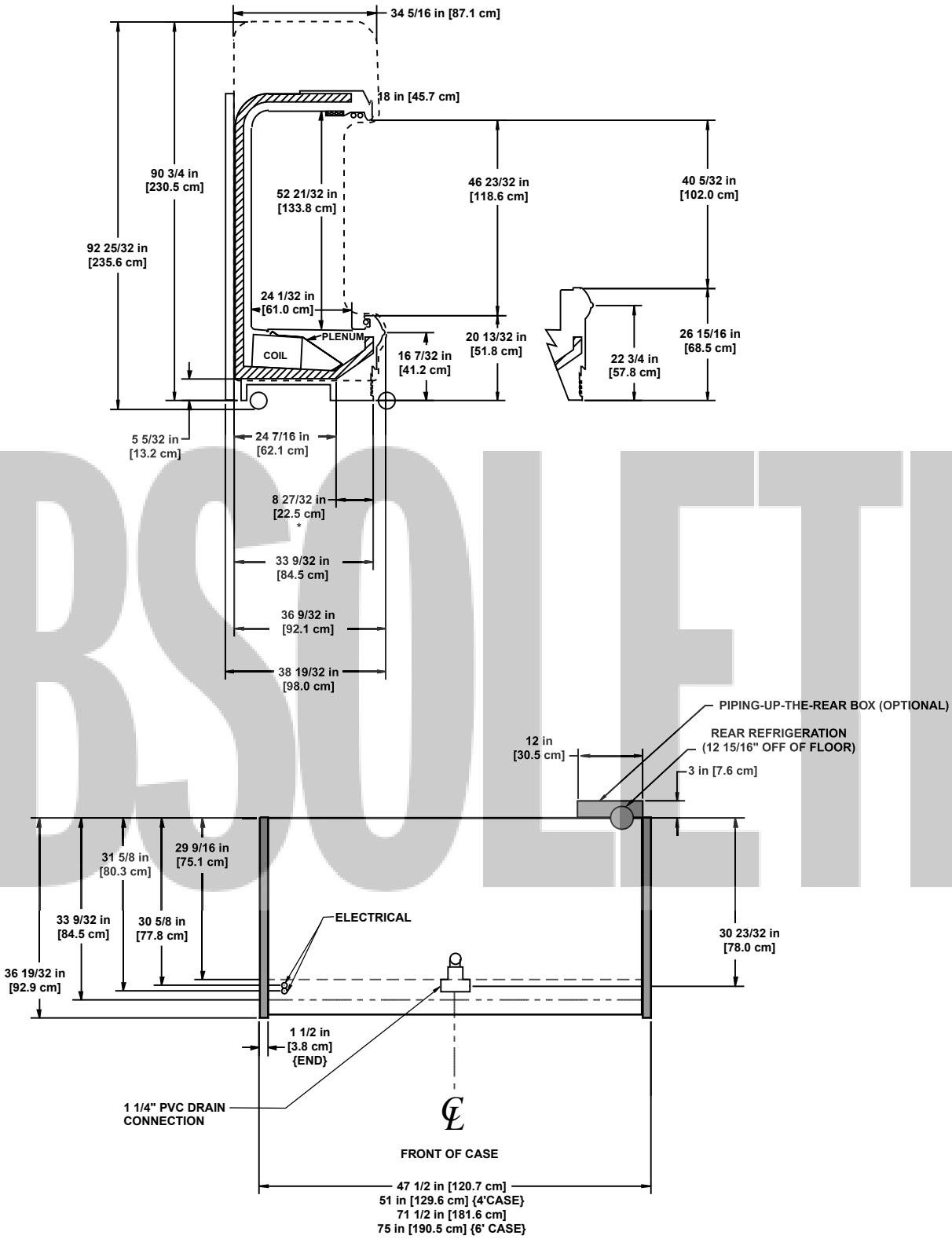

OBSOLETE

NOTES:

* STUB-UP AREA
** RECOMMENDED STUB-UP CENTERLINE FOR ELECTRICAL AND HUB DRAINS

- ENDS ADD APPROXIMATELY 1 INCH TO CASE HEIGHT
- WIRING-TO-THE-TOP- ADDS APPROXIMATELY 1 INCH TO CASE HEIGHT
- A 2" MINIMUM AIR GAP IS REQUIRED BETWEEN THE REAR OF THE CASE AND A WALL (WHEN THE CASE IS PIPED TO THE REAR A 3" TO 4" GAP MAY BE REQUIRED)
- BACK PANELS ADD APPROXIMATELY 1" TO THE REAR OF THE CASE
- SUCTION LINE 7/8", LIQUID LINE - 5/8"

Roll-In Rear Load Dairy Merchandisers

ORDR - 8’ & 12’ dairy

Electrical Data

Model		Fans per Case		Standard Fans 120 Volts		High Efficiency Fans 120 Volts		Anti-Condensate Heaters 120 Volts		Defrost Heaters 208 Volts		Defrost Heaters 240 Volts	
		Discharge	Return	Amps	Watts	Amps	Watts	Amps	Watts	Amps	Watts	Amps	Watts
ORDR	8’	3	4	2.95	157	1.29	104	- - -[1]	- - -	3.85	800	4.44	1066
	12’	4	6	4.16	220	1.82	147	- - -	- - -	5.77	1200	6.67	1600

[1] NOTE: - - - not an option on this case model.

Lighting Data

Model		Typical per Light Row 120 Volts Amps	Typical per Light Row 120 Volts Watts	Maximum Lighting 120 Volts Amps	Maximum Lighting 120 Volts Watts
ORDR	8’	0.57	68	3.90	468
	12’	0.77	92	5.84	701

OBSOLETE

Guidelines & Control Settings

Model	Front Sill Heights	BTUH/ft[2]	Evaporator (°F)	Discharge Air (°F)	Average Product (°F)	Return Air (°F)	Discharge Air Velocity[3] (FPM)
ORDR[4]	13 13/16”	739	17	28	40	44	310

[2] BTUH's/ft listed are for parallel operation. Conventional ratings may be approximated by multiplying listed rating by 1.04.

[3] Average discharge air velocity at peak of defrost.

[4] Back-up coils with a capacity of 1666 BTUH/ft at a suction temperature of 20oF must be used for each case to refrigerate the area immediately behind the line-up to a depth of 10’. If the cooler is longer than the ORDR line-up and deeper than 10’, other coils are needed to refrigerate the balance of the cooler area. Each auxiliary coil should be centered on each case and set back a distance of 3’ to 5’ from the back of the ORDR

Defrost Controls

Model	Defrosts Per Day	Electric Defrost Fail-safe (min)	Electric Defrost Termination Temp. (°F)	Timed Off Defrost Fail-safe (min)	Timed Off Defrost Termination Temp. (°F)	Hot Gas Defrost Fail-safe (min)	Hot Gas Defrost Termination Temp. (°F)	Reverse Air Defrost Fail-safe (min)	Reverse Air Defrost Termination Temp. (°F)
ORDR	4	30	47	30	47	26	47	- - -	- - -

Medium Temperature Defrost Schedule

No. Per Day	Hours
1	12 midnight
2	12 am - 12 pm
3	6 am - 2 pm - 10 pm
4	12 - 6 am - 12 - 6 pm

All measurements are taken per CRMA specifications.

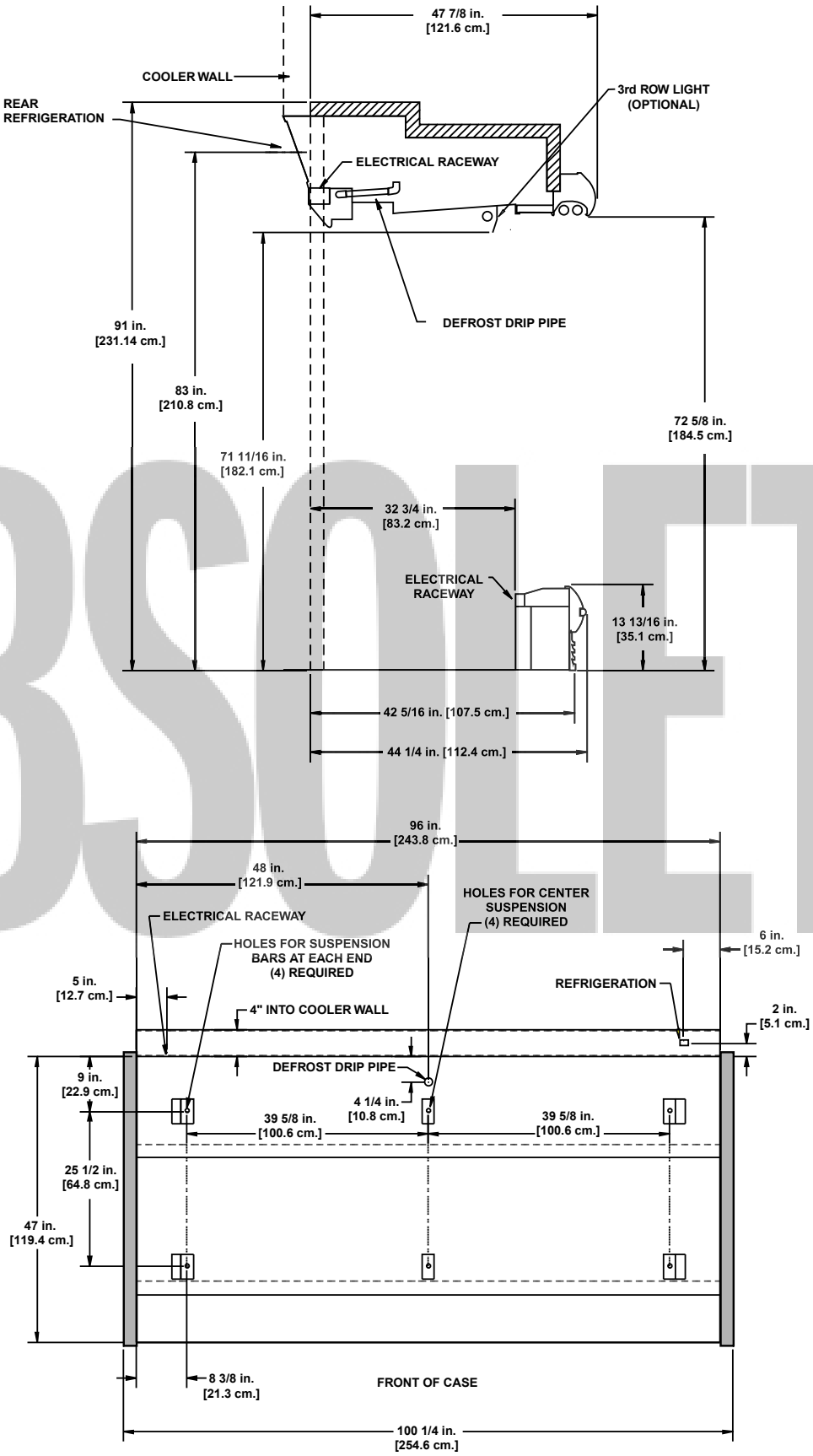
47 7/8 in.
[121.6 cm.]
COOLER WALL
REAR
REFRIGERATION
3rd ROW LIGHT
(OPTIONAL)
ELECTRICAL RACEWAY
DEFROST DRIP PIPE
91 in.
[231.14 cm.]
83 in.
[210.8 cm.]
71 11/16 in.
[182.1 cm.]
72 5/8 in.
[184.5 cm.]
32 3/4 in.
[83.2 cm.]
ELECTRICAL
RACEWAY
13 13/16 in.
[35.1 cm.]
42 5/16 in. [107.5 cm.]
44 1/4 in. [112.4 cm.]
96 in.
[243.8 cm.]
48 in.
[121.9 cm.]
HOLES FOR CENTER
SUSPENSION
(4) REQUIRED
ELECTRICAL RACEWAY
HOLES FOR SUSPENSION
BARS AT EACH END
(4) REQUIRED
6 in.
[15.2 cm.]
5 in.
[12.7 cm.]
REFRIGERATION
4" INTO COOLER WALL
2 in.
[5.1 cm.]
DEFROST DRIP PIPE
9 in.
[22.9 cm.]
4 1/4 in.
[10.8 cm.]
39 5/8 in.
[100.6 cm.]
39 5/8 in.
[100.6 cm.]
25 1/2 in.
[64.8 cm.]
47 in.
[119.4 cm.]
8 3/8 in.
[21.3 cm.]
FRONT OF CASE
100 1/4 in.
[254.6 cm.]

OBSOLETE

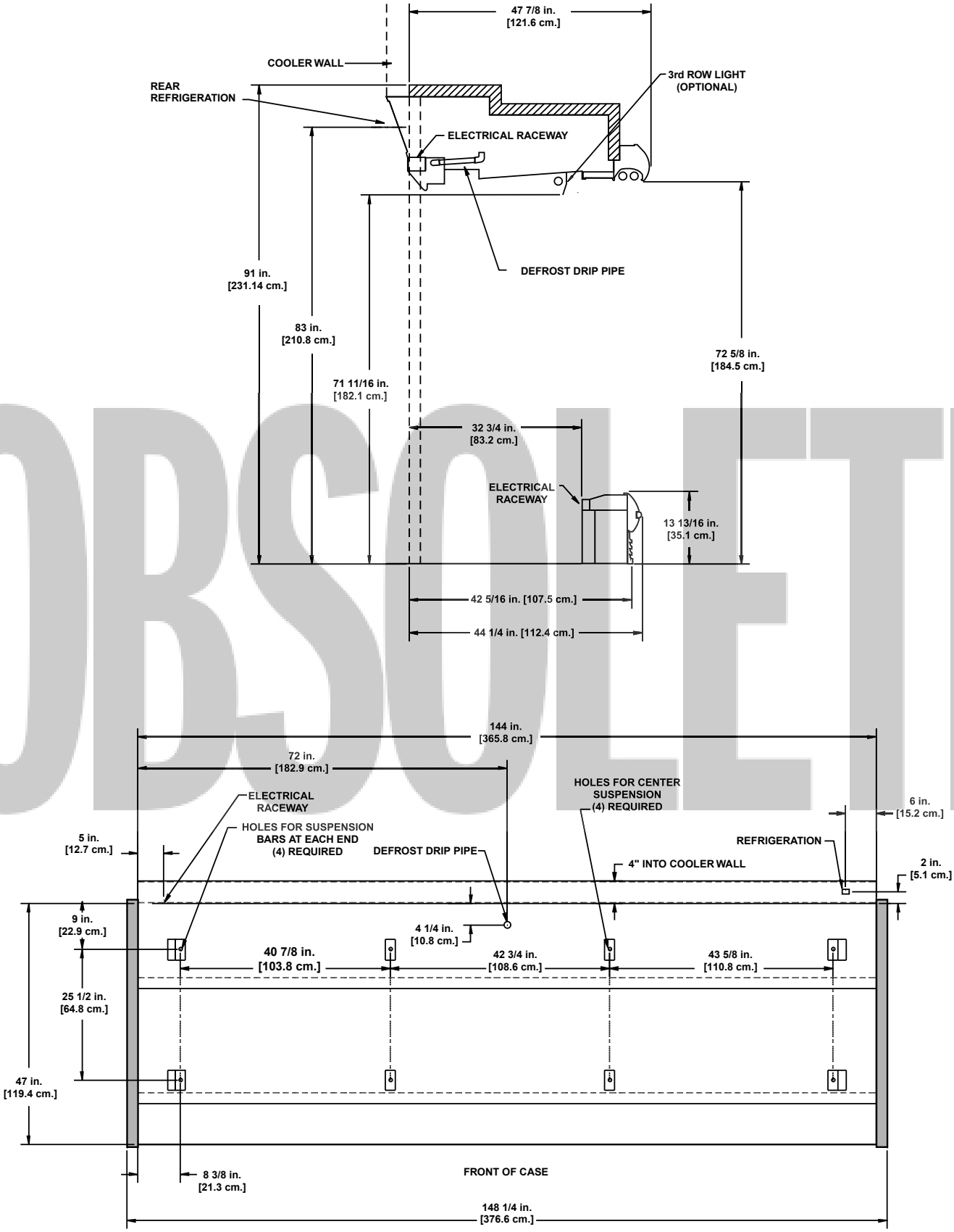
47 7/8 in.
[121.6 cm.]
COOLER WALL
REAR
REFRIGERATION
3rd ROW LIGHT
(OPTIONAL)
ELECTRICAL RACEWAY
DEFROST DRIP PIPE
91 in.
[231.14 cm.]
83 in.
[210.8 cm.]
71 11/16 in.
[182.1 cm.]
72 5/8 in.
[184.5 cm.]
32 3/4 in.
[83.2 cm.]
ELECTRICAL
RACEWAY
13 13/16 in.
[35.1 cm.]
42 5/16 in. [107.5 cm.]
44 1/4 in. [112.4 cm.]
144 in.
[365.8 cm.]
72 in.
[182.9 cm.]
ELECTRICAL
RACEWAY
HOLES FOR SUSPENSION
BARS AT EACH END
(4) REQUIRED
HOLES FOR CENTER
SUSPENSION
(4) REQUIRED
6 in.
[15.2 cm.]
5 in.
[12.7 cm.]
DEFROST DRIP PIPE
REFRIGERATION
4" INTO COOLER WALL
2 in.
[5.1 cm.]
9 in.
[22.9 cm.]
4 1/4 in.
[10.8 cm.]
40 7/8 in.
[103.8 cm.]
42 3/4 in.
[108.6 cm.]
43 5/8 in.
[110.8 cm.]
25 1/2 in.
[64.8 cm.]
47 in.
[119.4 cm.]
8 3/8 in.
[21.3 cm.]
FRONT OF CASE
148 1/4 in.
[376.6 cm.]

OBSOLETE

OBSOLETE

Reach-in Door Merchandisers

Notes:

- *Average product temperatures are calculated as defined by ASHRAE* standards and should not be used to determine application.*
- *Cases meet FDA** Food Code 1997 product temperature requirements (41°F or less) for hazardous foods when used for their prescribed applications.*
- *Allow for an extra 1/8" per joint when lining up merchandisers.*
- *Front sill height does not affect case performance unless specifically shown.*

* *American Society of Heating Refrigeration and Air Conditioning Engineers*

** *Food and Drug Administration*

Glass Door Reach-in Beverage Merchandisers

ORB - 2, 3, 4, & 5-door reach in beverage

Electrical Data

		Fans per Case	Standard Fans		High Efficiency Fans		Anti-Condensate Heaters		Defrost Heaters			
			120 Volts		120 Volts		120 Volts		208 Volts		240 Volts	
			Amps	Watts	Amps	Watts	Amps	Watts	Amps[1]	Watts	Amps	Watts
ORB	2-door	2	1.00	60	1.00	34	2.40	288	4.39	914	5.06	1215
	3-door	3	1.50	90	1.50	51	3.28	394	4.96	1032	5.71	1370
	4-door	4	2.00	120	2.00	69	4.33	520	6.51	1355	7.55	1813
	5-door	5	2.50	150	2.50	86	5.30	636	7.96	1655	9.17	2201

Lighting Data

		Standard Lighting		Typical per Light Row		Maximum Lighting	
		120 Volts		120 Volts		120 Volts	
		Amps	Watts	Amps	Watt	Amps	Watts
ORB	2-door	NA[1]	NA	NA	NA	1.45	174
	3-door	NA	NA	NA	NA	1.94	233
	4-door	NA	NA	NA	NA	2.42	290
	5-door	NA	NA	NA	NA	2.91	349

[1] Not applicable.

OBSOLETE

Guidelines & Control Settings

Model	BTUH/door[2]	Evaporator (°F)	Discharge Air (°F)	Average Product (°F)	Return Air (°F)	Discharge Air Velocity[3] (FPM)
ORB 1-door	900	22	27	39	30	280

[2] BTUH's/door listed are for parallel operation. Conventional ratings may be approximated by multiplying listed rating by 1.04.

[3] Average discharge air velocity at peak of defrost.

Defrost Controls

Model	Defrosts Per Day	Electric Defrost[4]		Timed Off Defrost		Hot Gas Defrost		Reverse Air Defrost	
		Fail-safe (min)	Termination Temp. (°F)	Fail-safe (min)	Termination Temp. (°F)	Fail-safe (min)	Termination Temp. (°F)	Fail-safe (min)	Termination Temp. (°F)
ORB	1	46	73	50	50	24	73	- - -	- - -

[4] For cases equipped with CPC case controllers use bi-metallic defrost controls with a setting of 73º F.

Medium Temperature Defrost Schedule

No. Per Day	Hours
1	12 midnight
2	12 am - 12 pm
3	6 am - 2 pm - 10 pm
4	12 - 6 am - 12 - 6 pm

Hill PHOENIX™ EXCELLENCE

A DOVER DIVERSIFIED COMPANY

All measurements are taken per CRMA specifications.

OBSOLETE

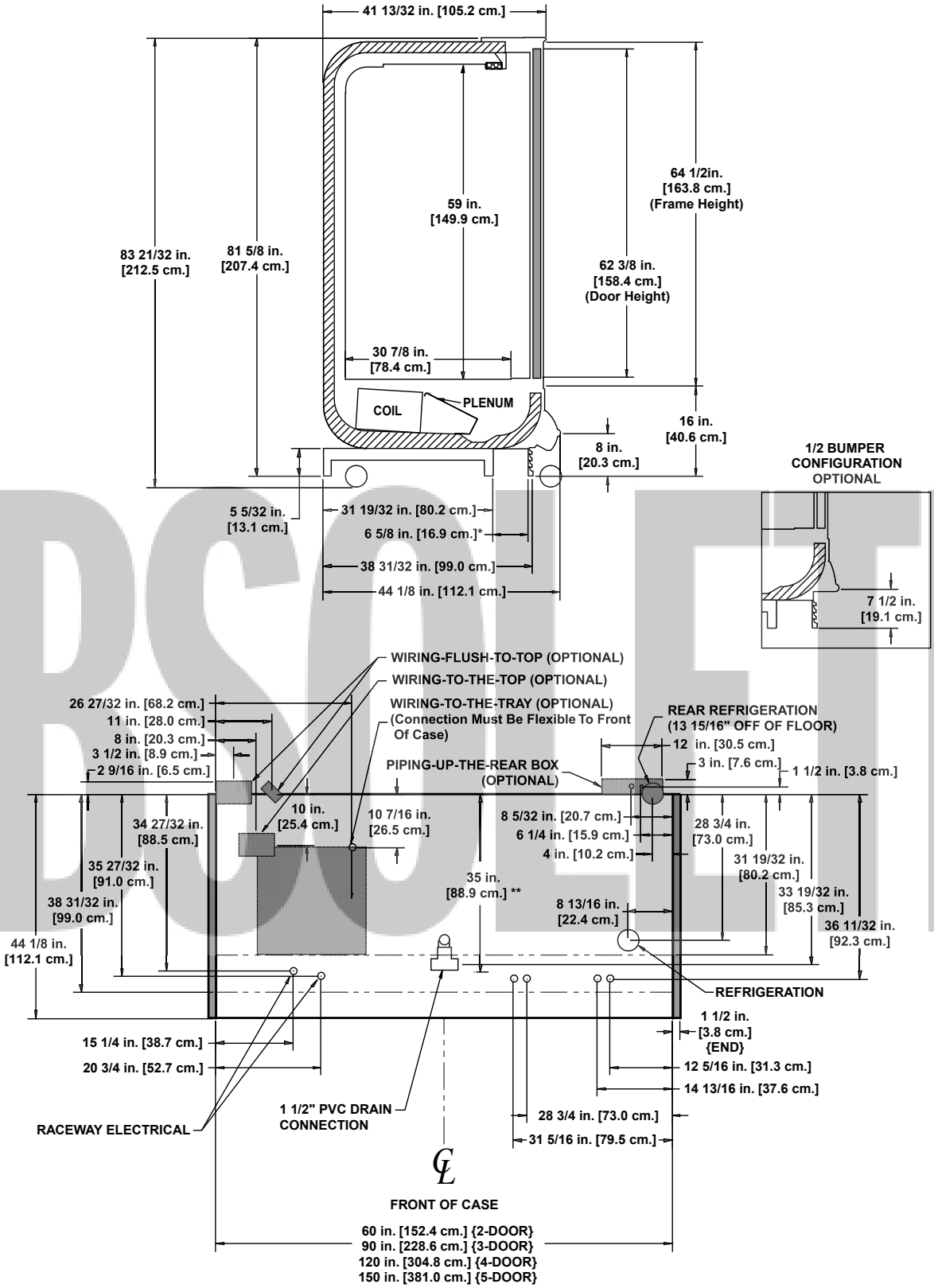

NOTES:

* STUB-UP AREA
** RECOMMENDED STUB-UP CENTERLINE FOR ELECTRICAL AND HUB DRAINS

- ENDS ADD APPROXIMATELY 1 INCH TO CASE HEIGHT
- WIRING-TO-THE-TOP- ADDS APPROXIMATELY 1 INCH TO CASE HEIGHT
- A 2" MINIMUM AIR GAP IS REQUIRED BETWEEN THE REAR OF THE CASE AND A WALL (WHEN THE CASE IS PIPED TO THE REAR A 3" TO 4" GAP MAY BE REQUIRED)
- SUCTION LINE 7/8", LIQUID LINE - 5/8"

Narrow Glass Door Reach-in Beverage Merchandisers

ONRB - 2, 3, 4, & 5-door reach in beverage

Electrical Data

			Standard Fans		High Efficiency Fans		Anti-Condensate Heaters		Defrost Heaters			
		Fans per Case	120 Volts		120 Volts		120 Volts		208 Volts		240 Volts	
			Amps	Watts	Amps	Watts	Amps	Watts	Amps[1]	Watts	Amps	Watts
ONRB	2-door	2	1.00	60	1.00	34	2.40	288	4.39	914	5.06	1215
	3-door	3	1.50	90	1.50	51	3.28	394	4.96	1032	5.71	1370
	4-door	4	2.00	120	2.00	69	4.33	520	6.51	1355	7.55	1813
	5-door	5	2.50	150	2.50	86	5.30	636	7.96	1655	9.17	2201

Lighting Data

		Standard Lighting		Typical per Light Row		Maximum Lighting	
		120 Volts		120 Volts		120 Volts	
		Amps	Watts	Amps	Watt	Amps	Watts
ONRB	2-door	NA[1]	NA	NA	NA	1.45	174
	3-door	NA	NA	NA	NA	1.94	233
	4-door	NA	NA	NA	NA	2.42	290
	5-door	NA	NA	NA	NA	2.91	349

[1] Not applicable.

OBSOLETE

Guidelines & Control Settings[2]

Model	BTUH/door[3]	Evaporator (°F)	Discharge Air (°F)	Average Product (°F)	Return Air (°F)	Discharge Air Velocity[4] (FPM)
ONRB 1-door	900	22	32	35	35	460

[2] All data listed is for an ONRB configured with 20" shelves.

[3] BTUH's/door listed are for parallel operation. Conventional ratings may be approximated by multiplying listed rating by 1.04.

[4] Average discharge air velocity at peak of defrost.

Defrost Controls

		Electric Defrost[5]		Timed Off Defrost		Hot Gas Defrost		Reverse Air Defrost	
Model	Defrosts Per Day	Fail-safe (min)	Termination Temp. (°F)	Fail-safe (min)	Termination Temp. (°F)	Fail-safe (min)	Termination Temp. (°F)	Fail-safe (min)	Termination Temp. (°F)
ONRB	1	46	73	50	50	24	73	- - -	- - -

[5] For cases equipped with CPC case controllers use bi-metallic defrost controls with a setting of 73º F.

Medium Temperature Defrost Schedule

No. Per Day	Hours
1	12 midnight
2	12 am - 12 pm
3	6 am - 2 pm - 10 pm
4	12 - 6 am - 12 - 6 pm

All measurements are taken per CRMA specifications.

Hill PHOENIX EXCELLENCE™
A DOVER DIVERSIFIED COMPANY

OBSOLETE

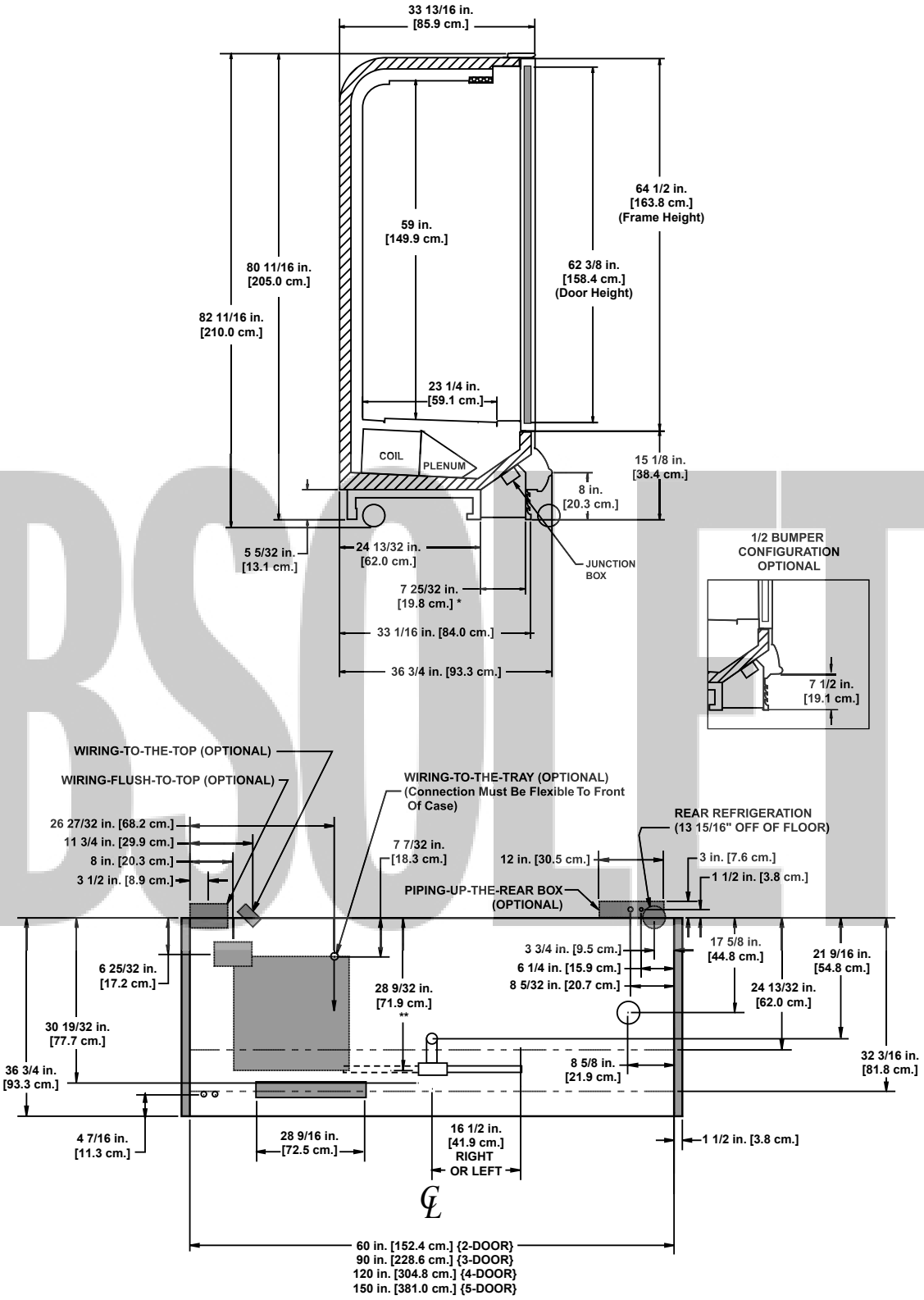

NOTES:

* STUB-UP AREA
** RECOMMENDED STUB-UP CENTERLINE FOR ELECTRICAL AND HUB DRAINS

- ENDS ADD APPROXIMATELY 1 INCH TO CASE HEIGHT
- WIRING-TO-THE-TOP- ADDS APPROXIMATELY 1 INCH TO CASE HEIGHT
- A 2" MINIMUM AIR GAP IS REQUIRED BETWEEN THE REAR OF THE CASE AND A WALL (WHEN THE CASE IS PIPED TO THE REAR A 3" TO 4" GAP MAY BE REQUIRED)
- SUCTION LINE 7/8", LIQUID LINE - 5/8"

Glass Door Reach-in Frozen Food/Ice Cream Merchandisers

ORZ - 2, 3, 4, & 5-door reach in freezer

Electrical Data

			Standard Fans		High Efficiency Fans		Anti-Condensate Heaters		Defrost Heaters			
		Fans per Case	120 Volts		120 Volts		120 Volts		208 Volts		240 Volts	
			Amps	Watts	Amps	Watts	Amps	Watts	Amps[1]	Watts	Amps[1]	Watts
ORZ	2-door	2	1.00	60	0.64	27	3.82	458	7.61	2742	8.77	3645
	3-door	3	1.50	90	0.96	40	5.31	637	8.59	3096	9.89	4110
	4-door	4	2.00	120	1.28	54	6.93	832	11.28	4065	13.08	5439
	5-door	5	2.50	150	1.60	67	8.56	1027	13.78	4965	15.88	6603

[1] Note: 3 phase load. Figure given is maximum amps per phase.

Lighting Data

		Standard Lighting		Typical per Light Row		Maximum Lighting	
		120 Volts		120 Volts		120 Volts	
		Amps	Watts	Amps	Watt	Amps	Watts
ORZ	2-door	NA[2]	NA	NA	NA	1.45	174
	3-door	NA	NA	NA	NA	1.94	233
	4-door	NA	NA	NA	NA	2.42	290
	5-door	NA	NA	NA	NA	2.91	349

[2] Not applicable.

OBSOLETE

Guidelines & Control Settings

Model	BTUH/DOOR[4]	Evaporator (°F)	Discharge Air (°F)	Average Product (°F)	Return Air (°F)	Discharge Air Velocity[5] (FPM)
ORZ-F[3] ONE DOOR	1400	-13	-8	0	-5	280
ORZ-C ONE DOOR	1600	-23	-12	-3	-10	280

[3] F = Frozen food, C = Ice cream

[4] BTUH's/door listed are for parallel operation. Conventional ratings may be approximated by multiplying listed rating by 1.04.

[5] Average discharge air velocity at peak of defrost.

Defrost Controls

		Electric Defrost[6]		Timed Off Defrost		Hot Gas Defrost		Reverse Air Defrost	
Model	Defrosts Per Day	Fail-safe (min)	Termination Temp. (°F)	Fail-safe (min)	Termination Temp. (°F)	Fail-safe (min)	Termination Temp. (°F)	Fail-safe (min)	Termination Temp. (°F)
ORZ	1	46	73	- - -[7]	- - -	24	73	- - -	- - -

[6] For cases equipped with CPC case controllers use bi-metallic defrost controls with a setting of 73° F.

[7] NOTE: - - - not an option on this case model.

Low Temperature Defrost Schedule

No. Per Day	Hours
1	10 pm
2	6 am - 10 pm**

** Or immediately after store closing hour

All measurements are taken per CRMA specifications.

Hill PHOENIX EXCELLENCE™

A DOVER DIVERSIFIED COMPANY

OBSOLETE

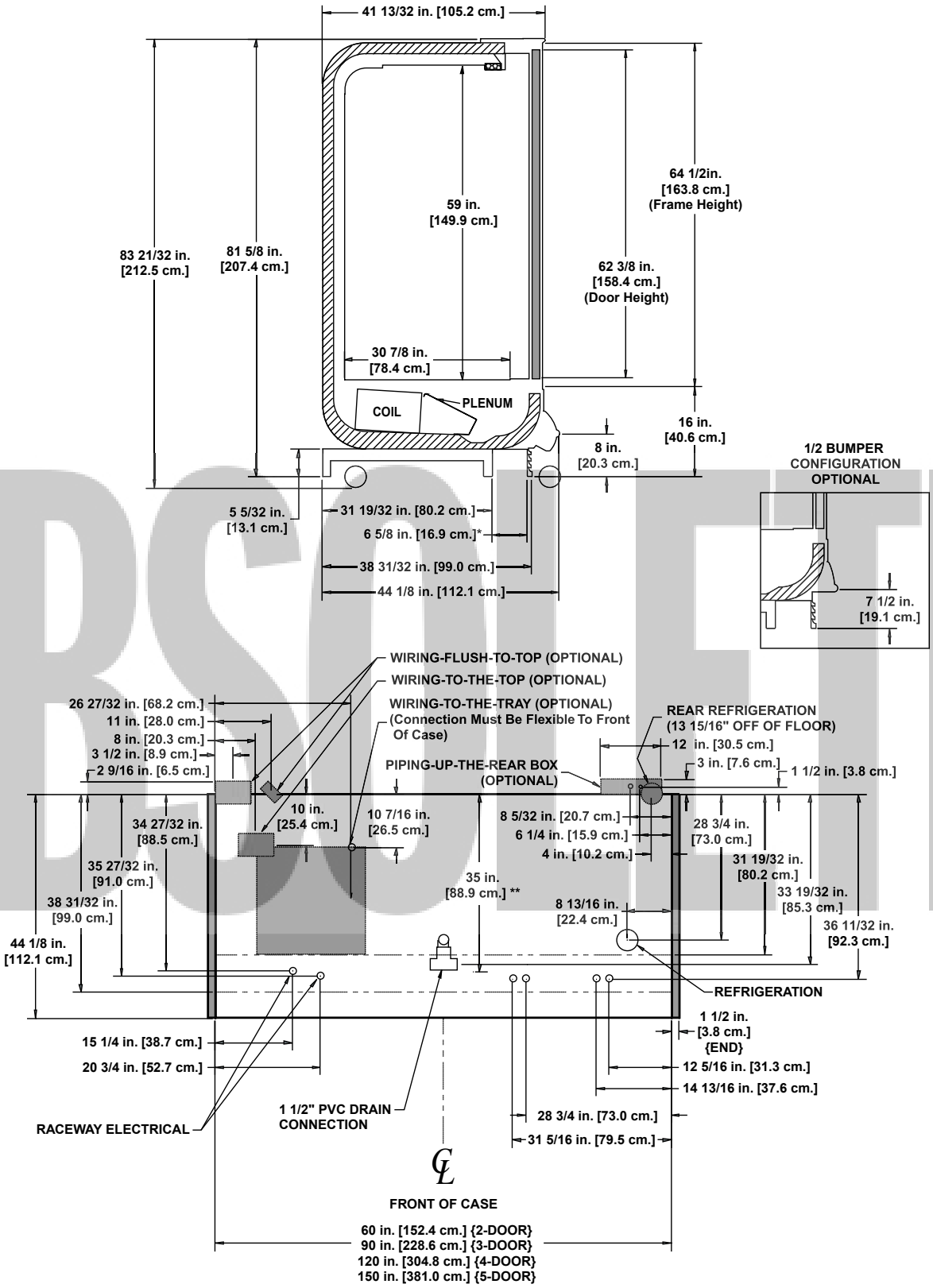

NOTES:

* STUB-UP AREA
** RECOMMENDED STUB-UP CENTERLINE FOR ELECTRICAL AND HUB DRAINS

- ENDS ADD APPROXIMATELY 1 INCH TO CASE HEIGHT
- WIRING-TO-THE-TOP- ADDS APPROXIMATELY 1 INCH TO CASE HEIGHT
- A 2" MINIMUM AIR GAP IS REQUIRED BETWEEN THE REAR OF THE CASE AND A WALL (WHEN THE CASE IS PIPED TO THE REAR A 3" TO 4" GAP MAY BE REQUIRED)
- SUCTION LINE 7/8", LIQUID LINE - 5/8"

Narrow Glass Door Reach-in Frozen Food/Ice Cream Merchandisers

ONRZ - 2, 3, 4, & 5-door narrow reach in freezer

Electrical Data

			Standard Fans		High Efficiency Fans		Anti-Condensate Heaters		Defrost Heaters			
		Fans per Case	120 Volts		120 Volts		120 Volts		208 Volts		240 Volts	
			Amps	Watts	Amps	Watts	Amps	Watts	Amps[1]	Watts	Amps[1]	Watts
ONRZ	2-door	2	1.00	60	0.64	27	3.82	458	7.61	2742	8.77	3645
	3-door	3	1.50	90	0.96	40	5.31	637	8.59	3096	9.89	4110
	4-door	4	2.00	120	1.28	54	6.93	832	11.28	4065	13.08	5439
	5-door	5	2.50	150	1.60	67	8.56	1027	13.78	4965	15.88	6603

[1] Note: 3 phase load. Figure given is maximum amps per phase.

Lighting Data

		Standard Lighting		Typical per Light Row		Maximum Lighting	
		120 Volts		120 Volts		120 Volts	
		Amps	Watts	Amps	Watt	Amps	Watts
ONRZ	2-door	NA[2]	NA	NA	NA	1.45	174
	3-door	NA	NA	NA	NA	1.94	233
	4-door	NA	NA	NA	NA	2.42	290
	5-door	NA	NA	NA	NA	2.91	349

[2] Not applicable.

Guidelines & Control Settings[3]

Model	BTUH/DOOR[5]	Evaporator (°F)	Discharge Air (°F)	Average Product (°F)	Return Air (°F)	Discharge Air Velocity[6] (FPM)
ONRZ-F[4] ONE DOOR	1500	-13	-2	0	2	460
ONRZ-C ONE DOOR	1600	-23	-12	-10	-8	460

[3] All data listed is for an ONRZ configured with 20" shelves.

[4] F = Frozen food, C = Ice cream.

[5] BTUH's/door listed are for parallel operation. Conventional ratings may be approximated by multiplying listed rating by 1.04.

[6] Average discharge air velocity at peak of defrost.

Defrost Controls

		Electric Defrost[7]		Timed Off Defrost		Hot Gas Defrost		Reverse Air Defrost	
Model	Defrosts Per Day	Fail-safe (min)	Termination Temp. (°F)	Fail-safe (min)	Termination Temp. (°F)	Fail-safe (min)	Termination Temp. (°F)	Fail-safe (min)	Termination Temp. (°F)
ONRZ	1	46	73	- - -[8]	- - -	24	73	- - -	- - -

[7] For cases equipped with CPC case controllers use bi-metallic defrost controls with a setting of 73° F.

[8] NOTE: - - - not an option on this case model.

Low Temperature Defrost Schedule

No. Per Day	Hours
1	10 pm
2	6 am - 10 pm**

** Or immediately after store closing hour

All measurements are taken per CRMA specifications.

Hill PHOENIX EXCELLENCE™

A DOVER DIVERSIFIED COMPANY

OBSOLETE

OBSOLETE

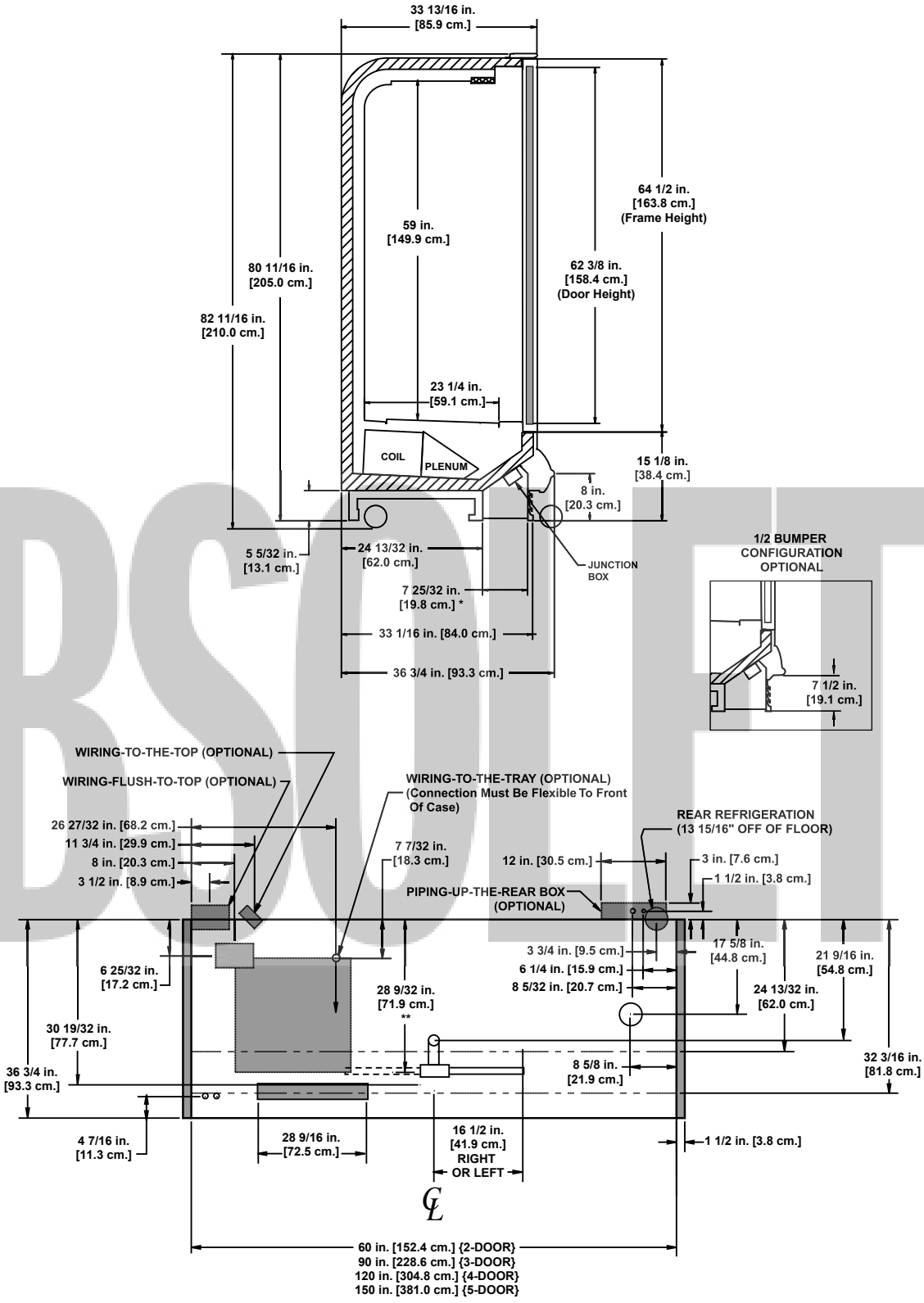

NOTES:

* STUB-UP AREA
** RECOMMENDED STUB-UP CENTERLINE FOR ELECTRICAL AND HUB DRAINS

- ENDS ADD APPROXIMATELY 1 INCH TO CASE HEIGHT
- WIRING-TO-THE-TOP- ADDS APPROXIMATELY 1 INCH TO CASE HEIGHT
- A 2" MINIMUM AIR GAP IS REQUIRED BETWEEN THE REAR OF THE CASE AND A WALL (WHEN THE CASE IS PIPED TO THE REAR A 3" TO 4" GAP MAY BE REQUIRED)
- SUCTION LINE 7/8", LIQUID LINE - 5/8"

High Glass Door Reach-in Frozen Food/Ice Cream Merchandisers

ORZH - 2, 3, 4, & 5-door high reach in freezer

Electrical Data

			Standard Fans		High Efficiency Fans		Anti-Condensate Heaters		Defrost Heaters			
		Fans per Case	120 Volts		120 Volts		120 Volts		208 Volts		240 Volts	
			Amps	Watts	Amps	Watts	Amps	Watts	Amps[1]	Watts	Amps[1]	Watts
ORZH	2-door	2	1.00	60	0.64	27	3.76	451	7.61	2742	8.77	3645
	3-door	3	1.50	90	0.96	40	5.30	636	8.59	3096	9.89	4110
	4-door	4	2.00	120	1.28	54	6.82	818	11.28	4065	13.08	5439
	5-door	5	2.50	150	1.60	67	8.45	1014	13.78	4965	15.88	6603

[1] Note: 3 phase load. Figure given is maximum amps per phase.

Lighting Data

		Standard Lighting		Typical per Light Row		Maximum Lighting	
		120 Volts		120 Volts		120 Volts	
		Amps	Watts	Amps	Watt	Amps	Watts
ORZH	2-door	NA[2]	NA	NA	NA	2.02	242
	3-door	NA	NA	NA	NA	1.94	233
	4-door	NA	NA	NA	NA	2.42	290
	5-door	NA	NA	NA	NA	2.91	349

[2] Not applicable.

OBSOLETE

Guidelines & Control Settings

Model	BTUH/DOOR[4]	Evaporator (°F)	Discharge Air (°F)	Average Product (°F)	Return Air (°F)	Discharge Air Velocity[5] (FPM)
ORZH-F[3] ONE DOOR	1500	-13	-3	0	-4	405
ORZH-C ONE DOOR	1600	-23	-12	-8	-4	405

[3] F = Frozen food, C = Ice cream

[4] BTUH's/door listed are for parallel operation. Conventional ratings may be approximated by multiplying listed rating by 1.04.

[5] Average discharge air velocity at peak of defrost.

Defrost Controls

		Electric Defrost[6]		Timed Off Defrost		Hot Gas Defrost		Reverse Air Defrost	
Model	Defrosts Per Day	Fail-safe (min)	Termination Temp. (°F)	Fail-safe (min)	Termination Temp. (°F)	Fail-safe (min)	Termination Temp. (°F)	Fail-safe (min)	Termination Temp. (°F)
ORZH	1	46	73	- - -[7]	- - -	24	73	- - -	- - -

[6] For cases equipped with CPC case controllers use bi-metallic defrost controls with a setting of 73º F.

[7] NOTE: - - - not an option on this case model.

Low Temperature Defrost Schedule

No. Per Day	Hours
1	10 pm
2	6 am - 10 pm**

** Or immediately after store closing hour

All measurements are taken per CRMA specifications.

Hill PHOENIX EXCELLENCE™

A DOVER DIVERSIFIED COMPANY

OBSOLETE

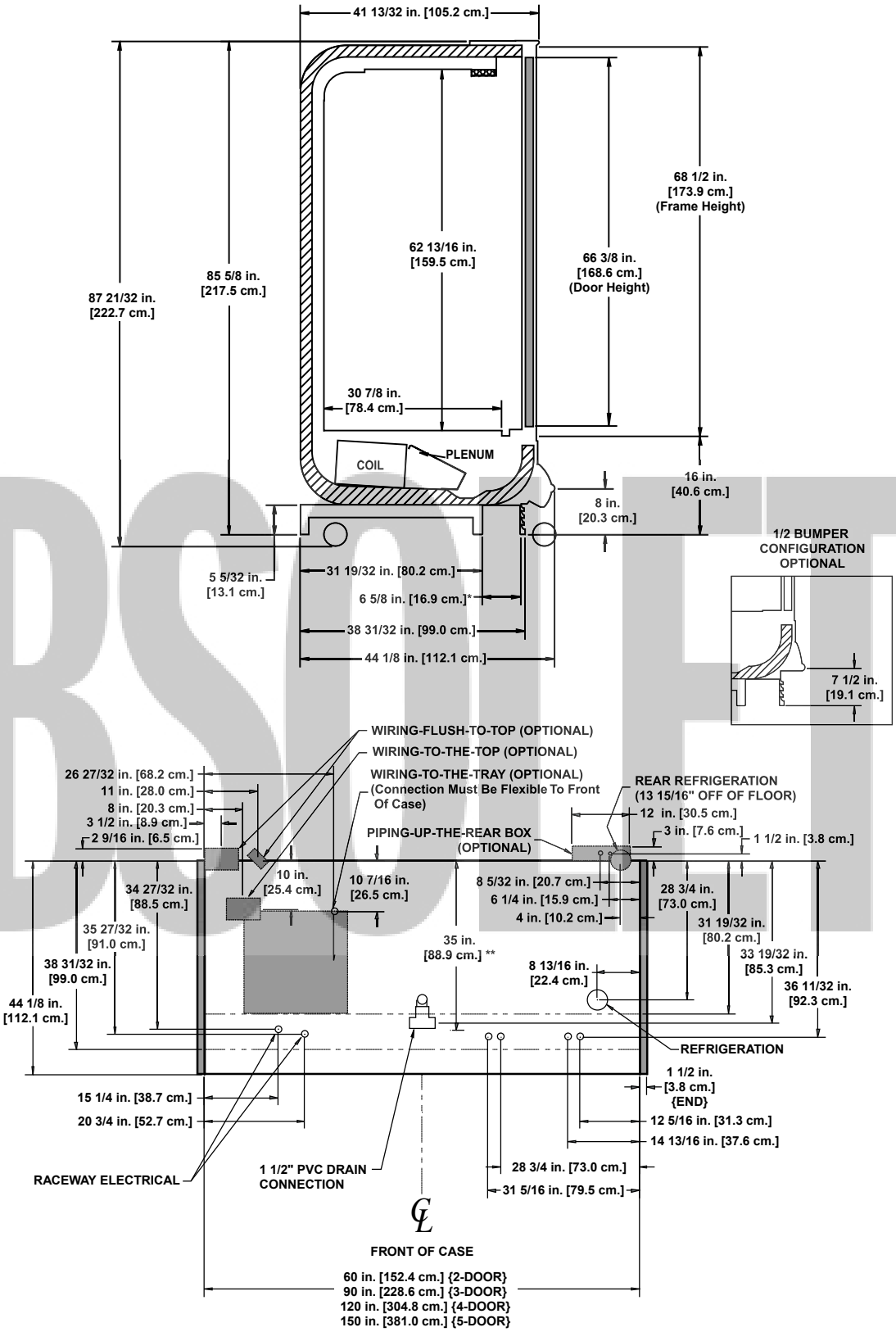

NOTES:

* STUB-UP AREA
** RECOMMENDED STUB-UP CENTERLINE FOR ELECTRICAL AND HUB DRAINS

- ENDS ADD APPROXIMATELY 1 INCH TO CASE HEIGHT
- WIRING-TO-THE-TOP- ADDS APPROXIMATELY 1 INCH TO CASE HEIGHT
- A 2" MINIMUM AIR GAP IS REQUIRED BETWEEN THE REAR OF THE CASE AND A WALL (WHEN THE CASE IS PIPED TO THE REAR A 3" TO 4" GAP MAY BE REQUIRED)
- SUCTION LINE 7/8", LIQUID LINE - 5/8"

OBSOLETE

OBSOLETE

Single Deck Island Merchandisers

Notes:

- *Average product temperatures are calculated as defined by ASHRAE* standards and should not be used to determine application.*
- *Cases meet FDA** Food Code 1997 product temperature requirements (41°F or less) for hazardous foods when used for their prescribed applications.*
- *Allow for an extra 1/8" per joint when lining up merchandisers.*
- *Front sill height does not affect case performance unless specifically shown.*

* *American Society of Heating Refrigeration and Air Conditioning Engineers*

** *Food and Drug Administration*

Wide Island Meat/Deli Merchandisers

OIM - 8' & 12' wide island double wraparound ends
OIM(B) - 6', 8' & 12' wide island single wraparound end
OIM(BB) - 8' wide island double joint ends

Electrical Data

Model		Fans per Case	Standard Fans 120 Volts Amps	Standard Fans 120 Volts Watts	High Efficiency Fans 120 Volts Amps	High Efficiency Fans 120 Volts Watts	Anti-Condensate Heaters 120 Volts Amps	Anti-Condensate Heaters 120 Volts Watts	Defrost Heaters 208 Volts Amps	Defrost Heaters 208 Volts Watts	Defrost Heaters 240 Volts Amps	Defrost Heaters 240 Volts Watts
OIM	8'	6	2.04	102	0.90	66	0.82	98	4.34	902	5.00	1200
	12'	8	2.72	136	1.20	88	1.08	130	7.22	1502	8.33	2000
OIM(B)	6'	4	1.36	76	0.60	44	0.57	68	3.25	676	3.75	900
	8'	6	2.04	102	0.90	66	0.75	90	4.34	902	5.00	1200
	12'	8	2.72	136	1.20	88	1.17	140	7.22	1502	8.33	2000
OIM(BB)	8'	6	2.04	102	0.90	66	0.92	110	4.34	902	5.00	1200

Lighting Data

Model		Typical per Light Row 120 Volts Amps	Typical per Light Row 120 Volts Watts	Maximum Lighting 120 Volts Amps	Maximum Lighting 120 Volts Watts
OIM	8'	NA[1]	NA	5.04	605
	12'	NA	NA	6.50	780
OIM(B)	6'	NA	NA	3.15	378
	8'	NA	NA	4.61	529
	12'	NA	NA	5.87	704
OIM(BB)	8'	NA	NA	3.78	454

[1] Not applicable.

OBSOLETE

Guidelines & Control Settings

Model	BTUH/ft[2]	Evaporator (°F)	Discharge Air (°F)	Average Product (°F)	Return Air (°F)	Discharge Air Velocity[3] (FPM)
OIM/OIM(B)/OIM(BB) Meat	770[4]	12	26	34	31	140
OIM/OIM(B)/OIM(BB) Deli	560[5]	17	28	36	33	140

[2] BTUH's/ft listed are for parallel operation. Conventional ratings may be approximated by multiplying listed rating by 1.04.

[3] Average discharge air velocity at peak of defrost.

[4] OIM (meat): +400 BTUH per wraparound end.

[5] OIM (deli): +250 BTUH per wraparound end.

Defrost Controls

Model	Defrosts Per Day	Electric Defrost Fail-safe (min)	Electric Defrost Termination Temp. (°F)	Timed Off Defrost Fail-safe (min)	Timed Off Defrost Termination Temp. (°F)	Hot Gas Defrost Fail-safe (min)	Hot Gas Defrost Termination Temp. (°F)	Reverse Air Defrost Fail-safe (min)	Reverse Air Defrost Termination Temp. (°F)
OIM/OIM(B) /OIM(BB)	3	40	42	- - - [6]	- - -	26	39	- - -	- - -

[6] NOTE: - - - not an option on this case model.

Medium Temperature Defrost Schedule

No. Per Day	Hours
1	12 midnight
2	12 am - 12 pm
3	6 am - 2 pm - 10 pm
4	12 - 6 am - 12 - 6 pm

All measurements taken per CRMA specifications.

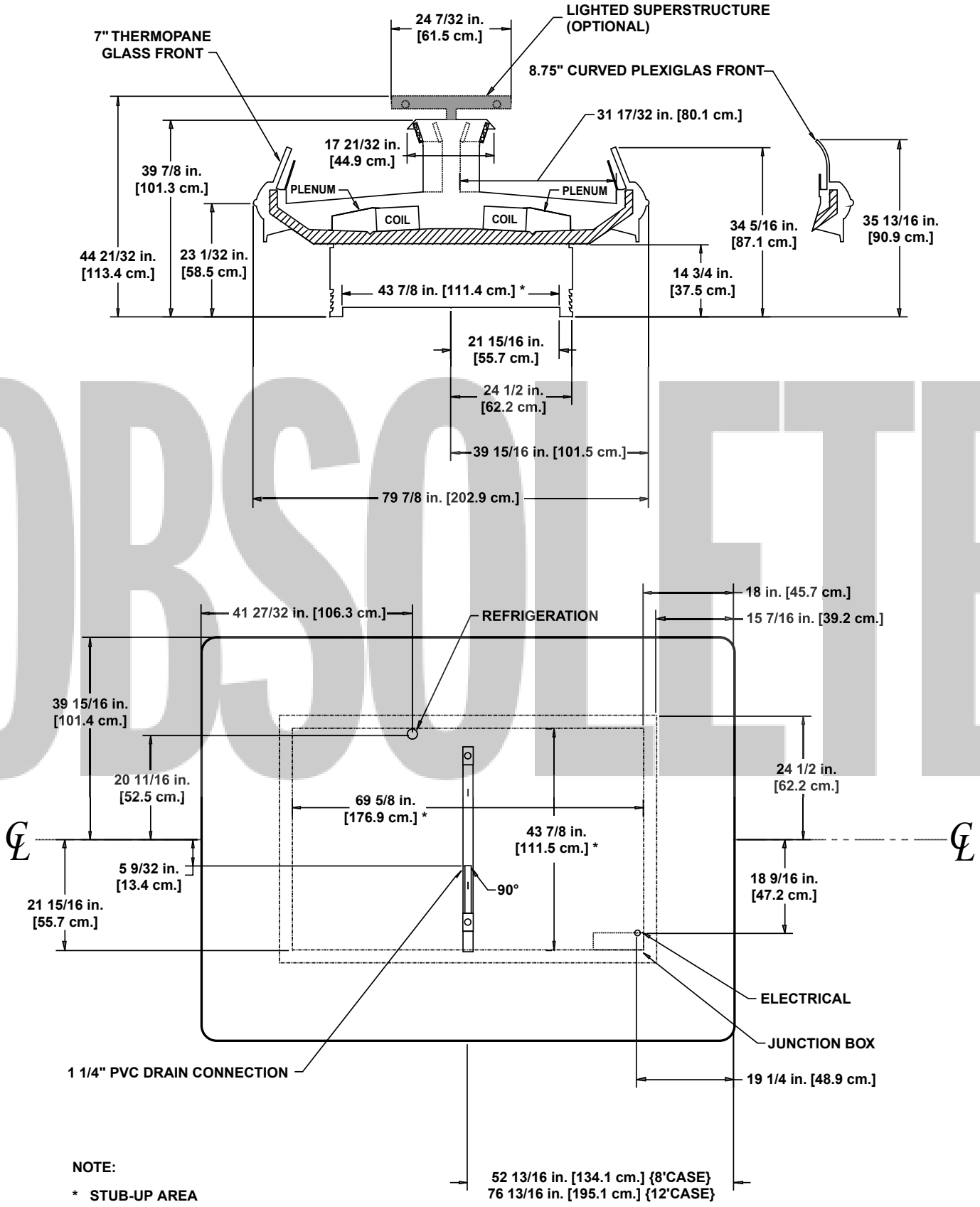

NOTE:

* STUB-UP AREA

OBSOLETE

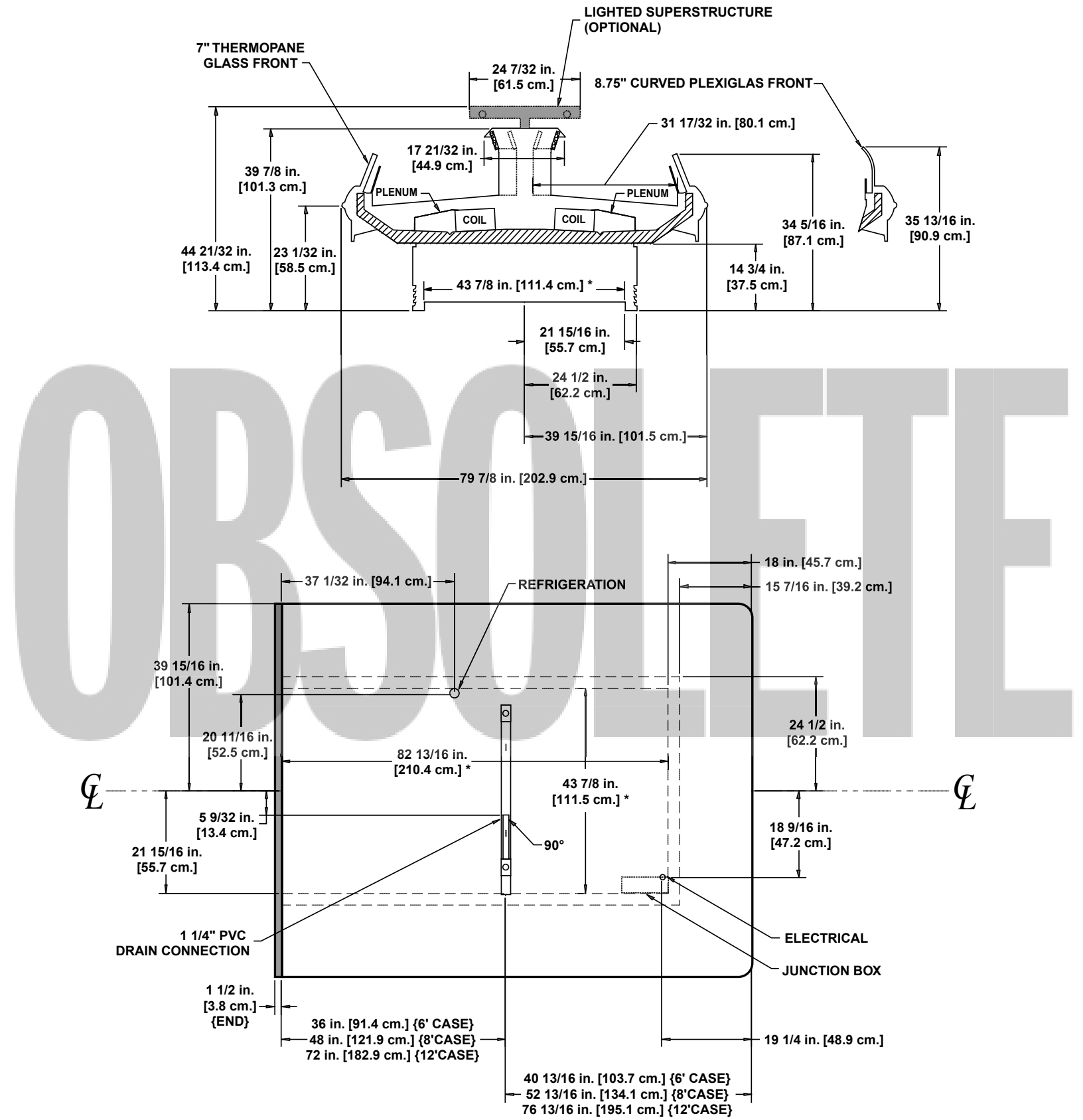

OBSOLETE

NOTE:

* STUB-UP AREA

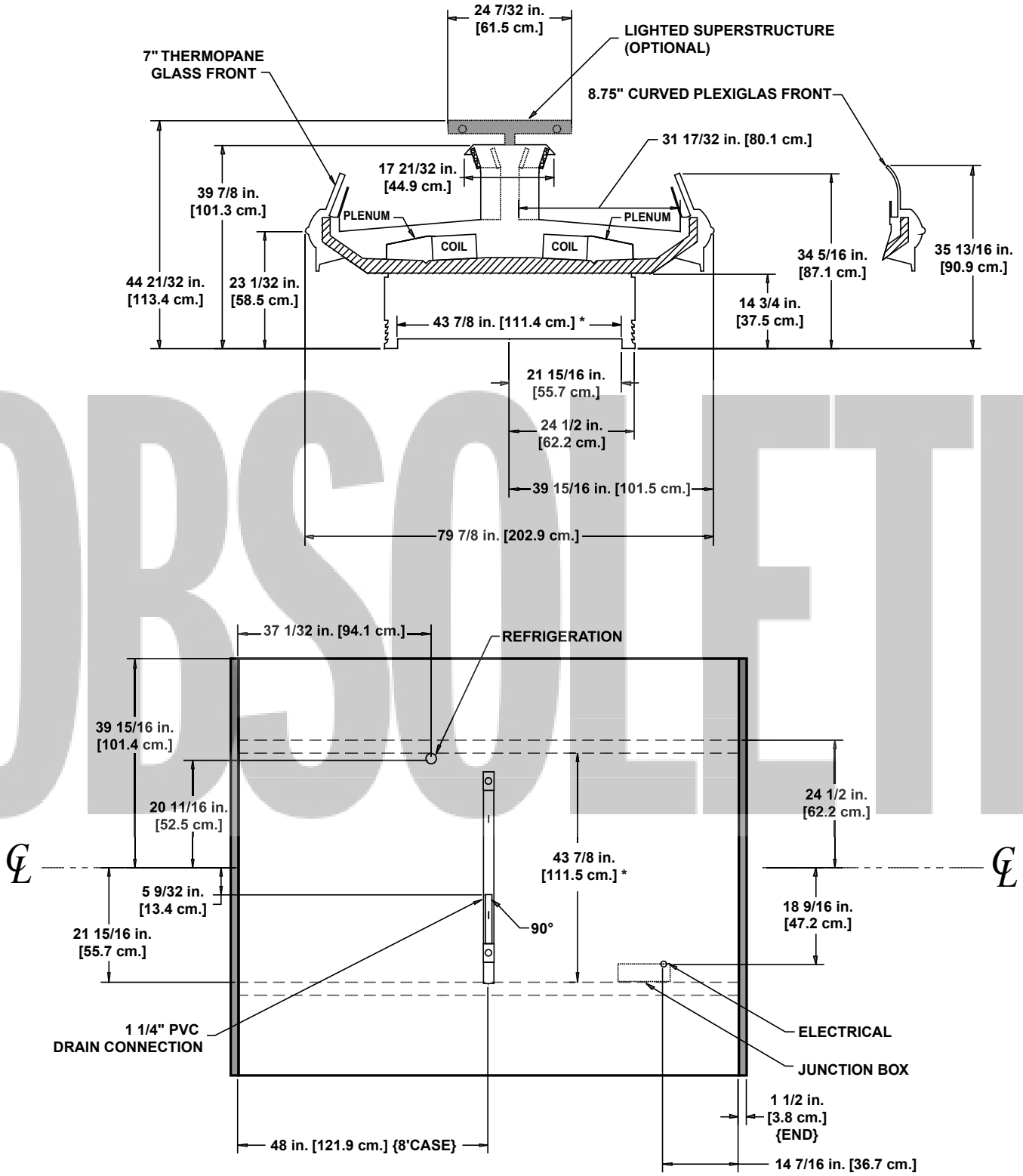

NOTE:

* STUB-UP AREA

OBSOLETE

Narrow Island Meat/Deli Merchandisers

ONIM - 8' & 12' wide island double wraparound ends
ONIM(B) - 8' & 12' wide island single wraparound end

Electrical Data

Model		Fans per Case	Standard Fans 120 Volts Amps	Standard Fans 120 Volts Watts	High Efficiency Fans 120 Volts Amps	High Efficiency Fans 120 Volts Watts	Anti-Condensate Heaters 120 Volts Amps	Anti-Condensate Heaters 120 Volts Watts	Defrost Heaters 208 Volts Amps	Defrost Heaters 208 Volts Watts	Defrost Heaters 240 Volts Amps	Defrost Heaters 240 Volts Watts
ONIM	8'	6	2.04	102	0.90	66	0.82	98	4.34	902	5.00	1200
	12'	8	2.72	136	1.20	88	1.08	130	7.22	1502	8.33	2000
ONIM(B)	8'	6	2.04	102	0.90	66	0.75	90	4.34	902	5.00	1200
	12	8	2.72	136	1.20	88	1.17	140	7.22	1502	8.33	2000

Lighting Data

Model		Typical per Light Row 120 Volts Amps	Typical per Light Row 120 Volts Watts	Maximum Lighting 120 Volts Amps	Maximum Lighting 120 Volts Watts
ONIM	8'	NA[1]	NA	1.26	151
	12'	NA	NA	1.46	175
ONIM(B)	8'	NA	NA	1.26	151
	12'	NA	NA	1.46	175

[1] Not applicable.

OBSOLETE

Guidelines & Control Settings

Model	BTUH/ft[2]	Evaporator (°F)	Discharge Air (°F)	Average Product (°F)	Return Air (°F)	Discharge Air Velocity[3] (FPM)
ONIM/ONIM(B) Meat	885[4]	12	25	33	34	180
ONIM/ONIM(B) Deli	860[5]	17	28	36	37	180

[2] BTUH's/ft listed are for parallel operation. Conventional ratings may be approximated by multiplying listed rating by 1.04.

[3] Average discharge air velocity at peak of defrost.

[4] ONIM (meat): +400 BTUH per wraparound end.

[5] ONIM (deli): +250 BTUH per wraparound end.

Defrost Controls

Model	Defrosts Per Day	Electric Defrost Fail-safe (min)	Electric Defrost Termination Temp. (°F)	Timed Off Defrost Fail-safe (min)	Timed Off Defrost Termination Temp. (°F)	Hot Gas Defrost Fail-safe (min)	Hot Gas Defrost Termination Temp. (°F)	Reverse Air Defrost Fail-safe (min)	Reverse Air Defrost Termination Temp. (°F)
ONIM/ONIM(B)	3	35	47	- - - [6]	- - -	26	39	- - -	- - -

[6] NOTE: - - - not an option on this case model.

Medium Temperature Defrost Schedule

No. Per Day	Hours
1	12 midnight
2	12 am - 12 pm
3	6 am - 2 pm - 10 pm
4	12 - 6 am - 12 - 6 pm

Hill PHOENIX™ EXCELLENCE

A DOVER DIVERSIFIED COMPANY

All measurements are taken per CRMA specifications.

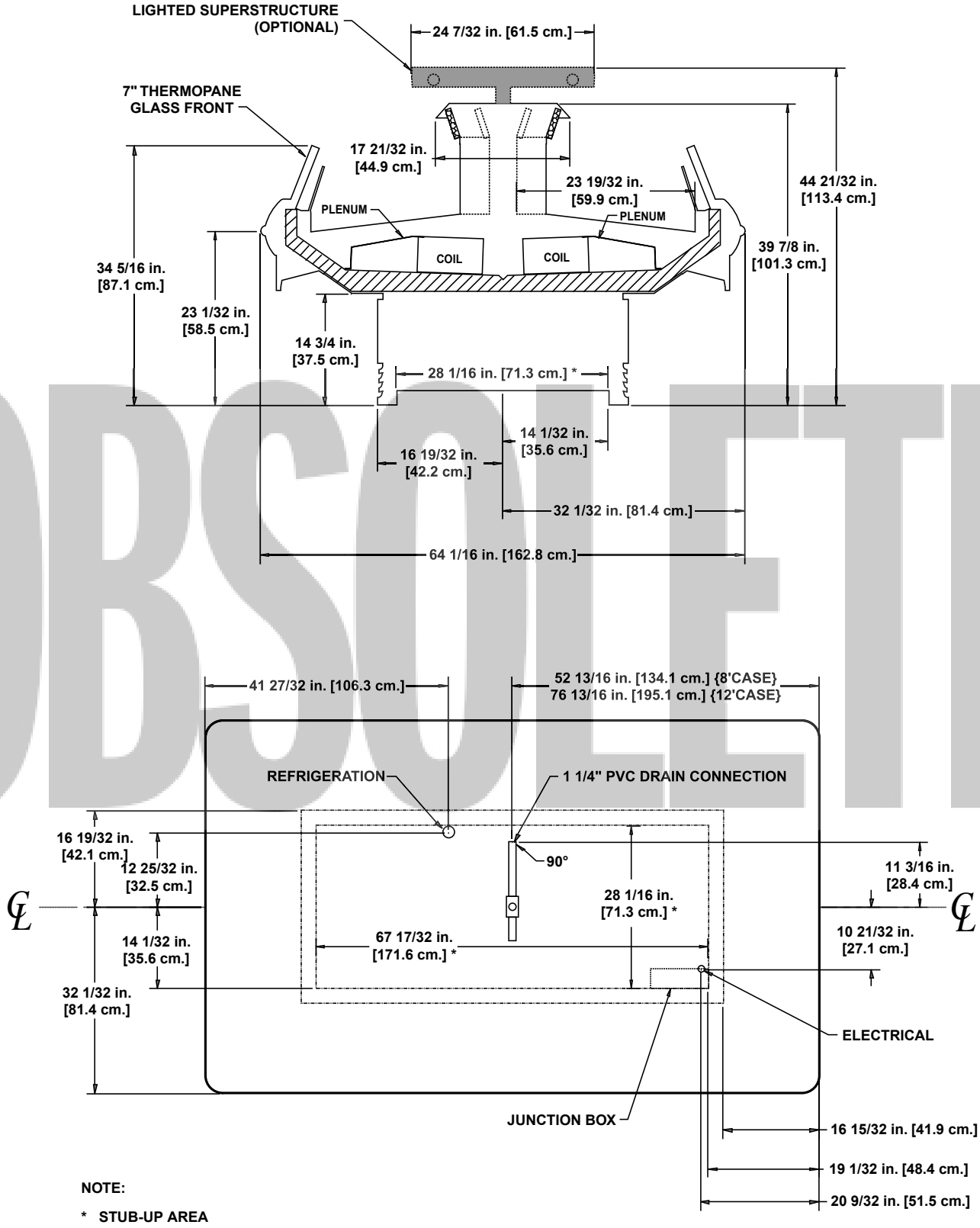

NOTE:

* STUB-UP AREA

OBSOLETE

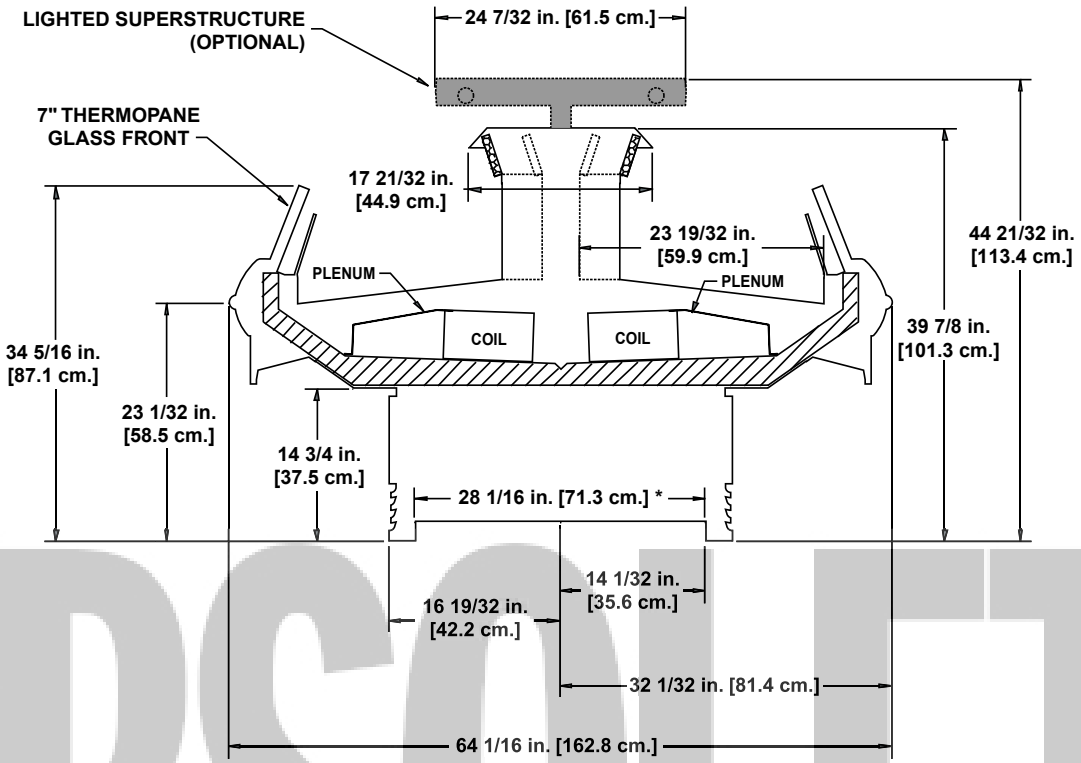

OBSOLETE

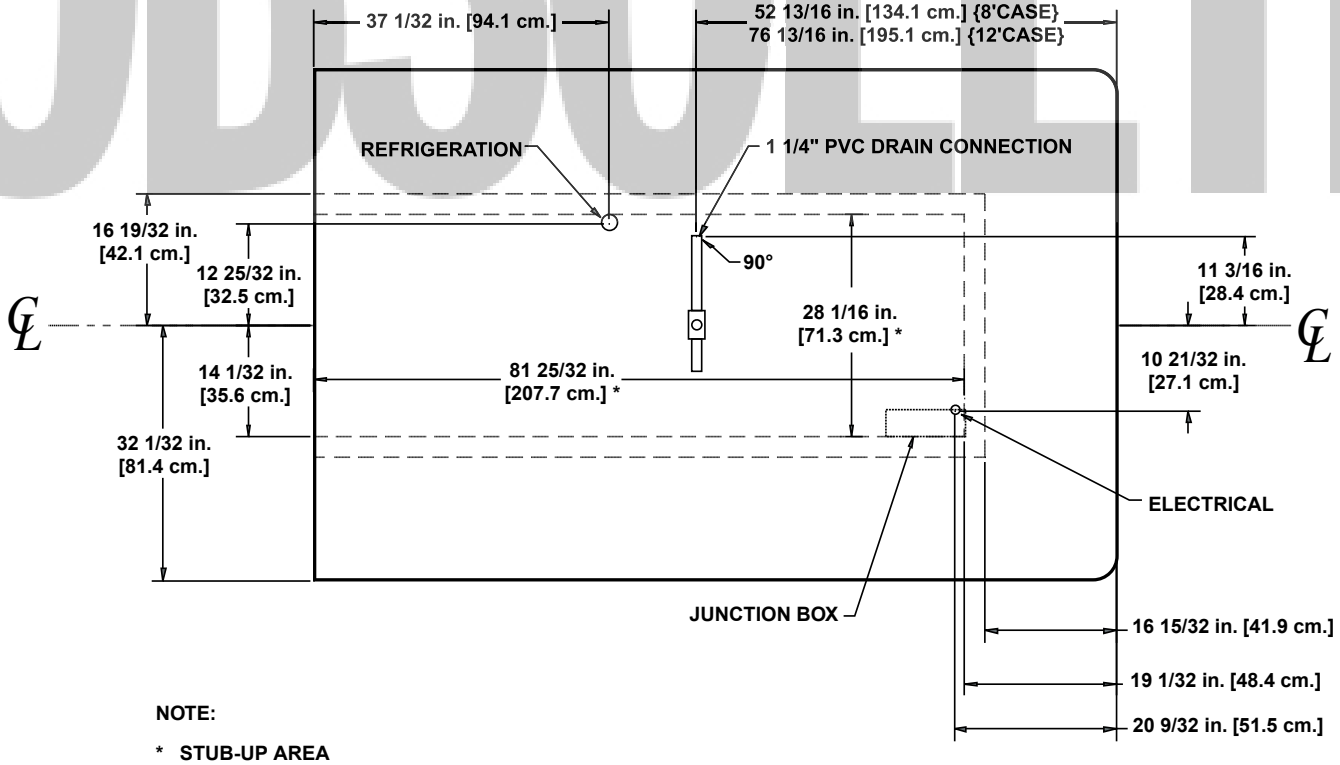

NOTE:

* STUB-UP AREA

OBSOLETE

Wide Island Bulk Produce Merchandisers

OIP - 8’ & 12’ wide island double wraparound end
OIP(B) - 6’, 8’, 10’ & 12’ wide island single wraparound end
OIP(BB) - 8’ & 12’ wide island double joint

Electrical Data

Model		Fans per Case	Standard Fans 120 Volts Amps	Standard Fans 120 Volts Watts	High Efficiency Fans 120 Volts Amps	High Efficiency Fans 120 Volts Watts	Anti-Condensate Heaters 120 Volts Amps	Anti-Condensate Heaters 120 Volts Watts	Defrost Heaters 208 Volts Amps	Defrost Heaters 208 Volts Watts	Defrost Heaters 240 Volts Amps	Defrost Heaters 240 Volts Watts
OIP	8’	6	2.04	102	0.90	66	0.23	28	- - -[1]	- - -	- - -	- - -
	12’	8	2.72	136	1.20	88	0.55	66	- - -	- - -	- - -	- - -
OIP(B)	6’	4	1.36	76	0.60	44	0.31	37	- - -	- - -	- - -	- - -
	8’	6	2.04	102	0.90	66	0.46	55	- - -	- - -	- - -	- - -
	10’	6	2.04	102	0.90	66	0.66	79	- - -	- - -	- - -	- - -
	12’	8	2.72	136	1.20	88	0.78	94	- - -	- - -	- - -	- - -
OIP(BB)	8’	6	2.04	102	0.90	66	0.84	101	- - -	- - -	- - -	- - -
	12’	8	2.72	136	1.20	88	1.26	151	- - -	- - -	- - -	- - -

[1] NOTE: - - - not an option on this case model.

Lighting Data

Model		Typical per Light Row 120 Volts Amps	Typical per Light Row 120 Volts Watts	Maximum Lighting 120 Volts Amps	Maximum Lighting 120 Volts Watts
OIP	8’	NA[2]	NA	3.78	454
	12’	NA	NA	5.04	605
OIP(B)	6’	NA	NA	1.89	227
	8’	NA	NA	3.15	378
	10’	NA	NA	- - -	- - -
	12’	NA	NA	4.41	529
OIP(BB)	8’	NA	NA	2.52	302
	12’	NA	NA	3.78	454

[2] Not applicable.

OBSOLETE

Guidelines & Control Settings

Model	BTUH/ft[3]	Evaporator (°F)	Discharge Air (°F)	Average Product (°F)	Return Air (°F)	Discharge Air Velocity[4] (FPM)
OIP/OIP(B)/ OIP(BB)	650[5]	22	34	40	48	140

[3] BTUH's/ft listed are for parallel operation. Conventional ratings may be approximated by multiplying listed rating by 1.04.

[4] Average discharge air velocity at peak of defrost.

[5] OIP: +600 BTUH per wraparound end.

Defrost Controls

Model	Defrosts Per Day	Electric Defrost Fail-safe (min)	Electric Defrost Termination Temp. (°F)	Timed Off Defrost Fail-safe (min)	Timed Off Defrost Termination Temp. (°F)	Hot Gas Defrost Fail-safe (min)	Hot Gas Defrost Termination Temp. (°F)	Reverse Air Defrost Fail-safe (min)	Reverse Air Defrost Termination Temp. (°F)
OIP/OIP(B) /OIP(BB)	3	- - -	- - -	44	38	- - -	- - -	- - -	- - -

Medium Temperature Defrost Schedule

No. Per Day	Hours
1	12 midnight
2	12 am - 12 pm
3	6 am - 2 pm - 10 pm
4	12 - 6 am - 12 - 6 pm

All measurements are taken per CRMA specifications.

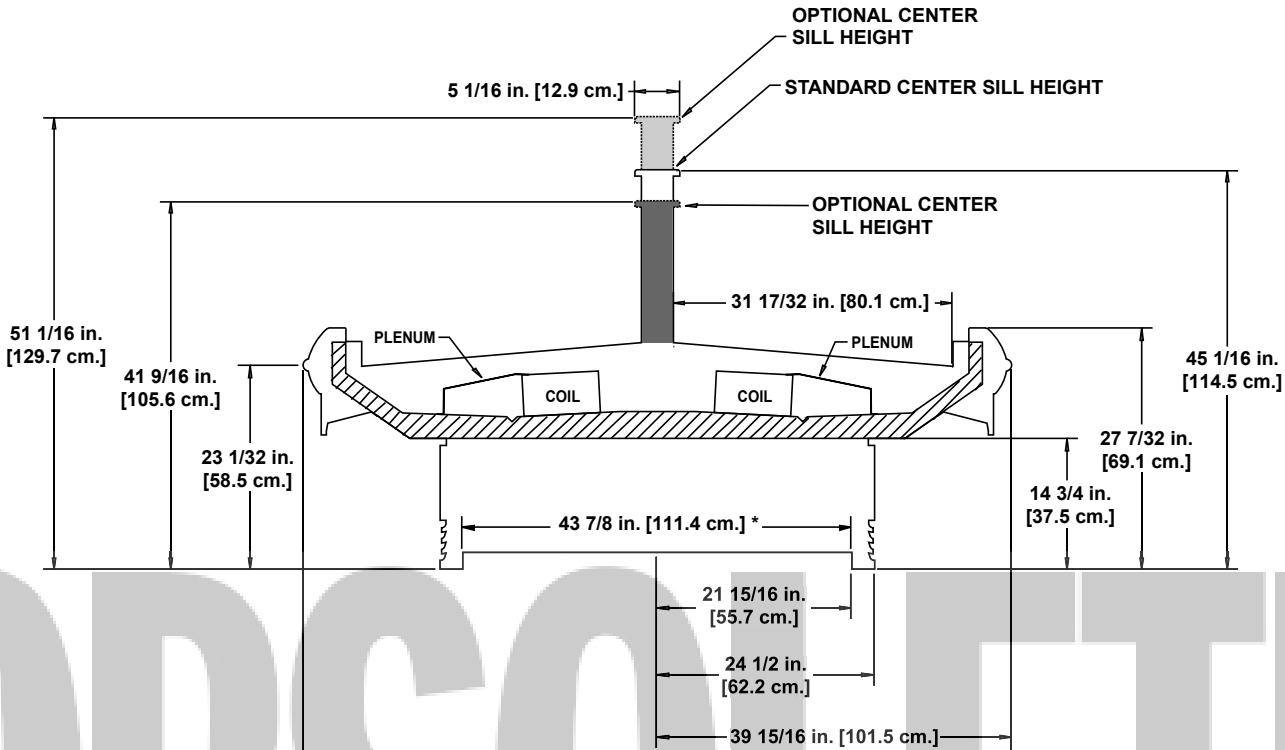

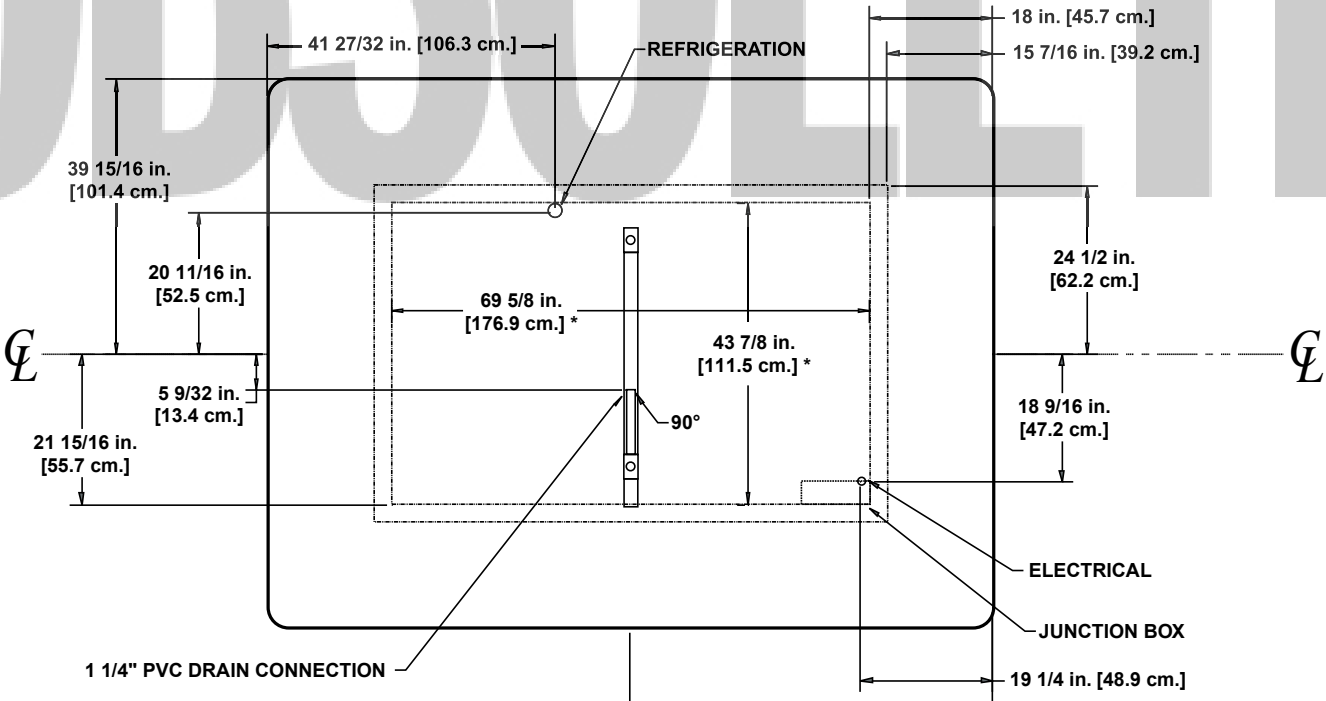

NOTE:

* STUB-UP AREA

52 13/16 in. [134.1 cm.] {8'CASE}
76 13/16 in. [195.1 cm.] {12'CASE}

OBSOLETE

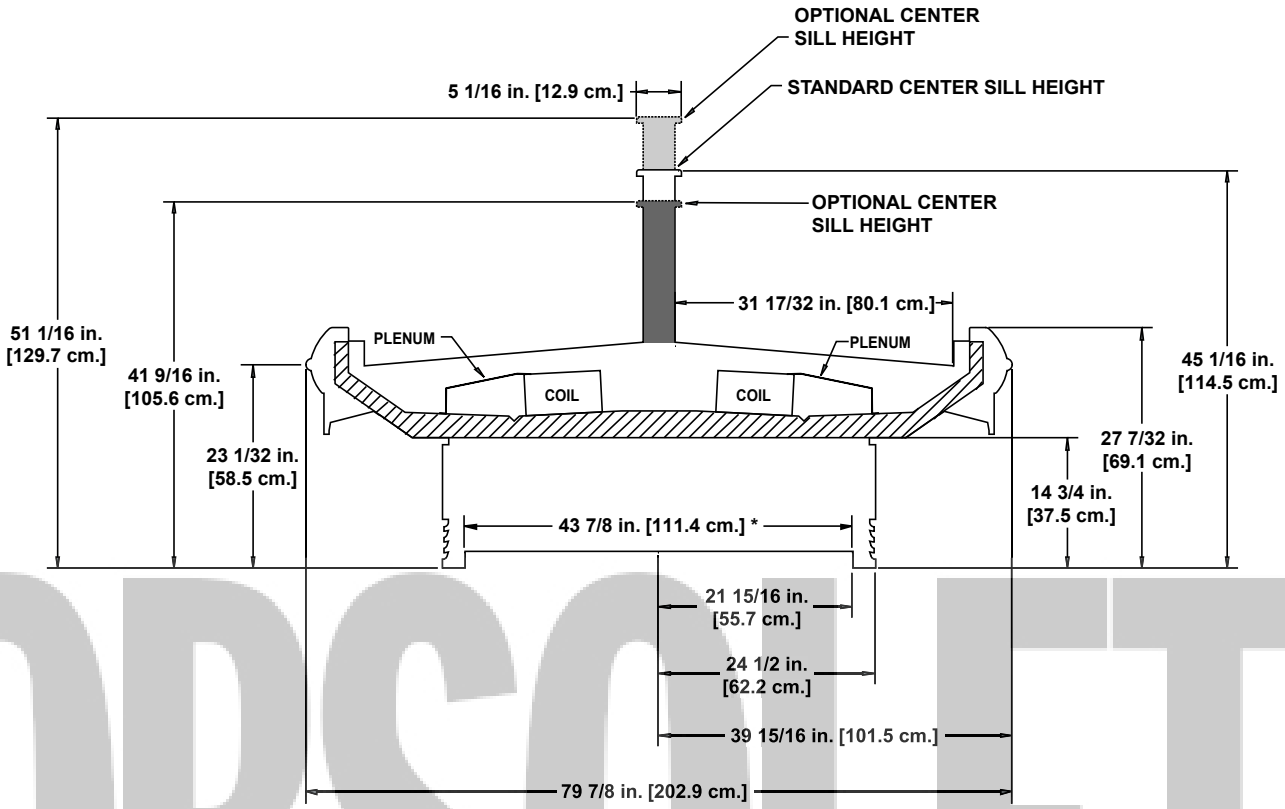

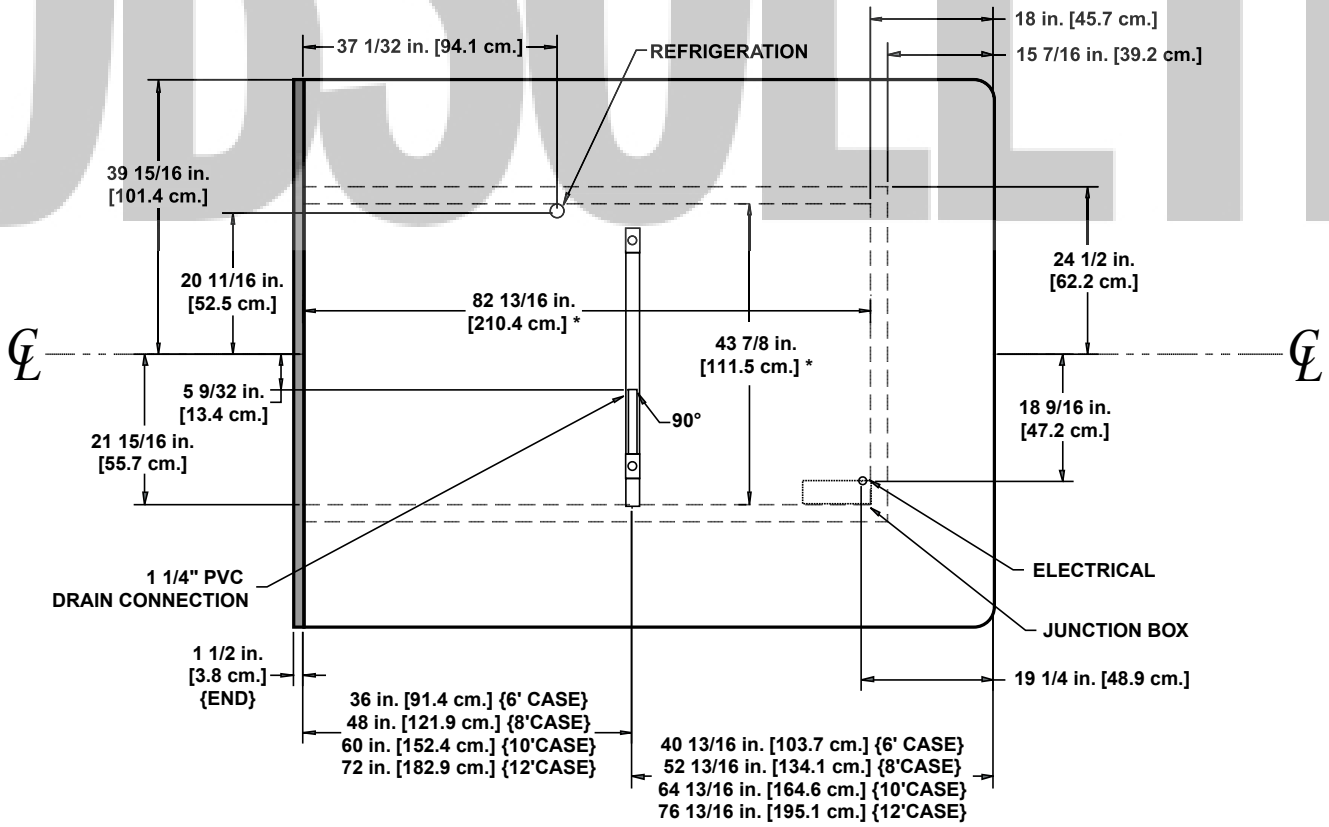

NOTE:

* STUB-UP AREA

OBSOLETE

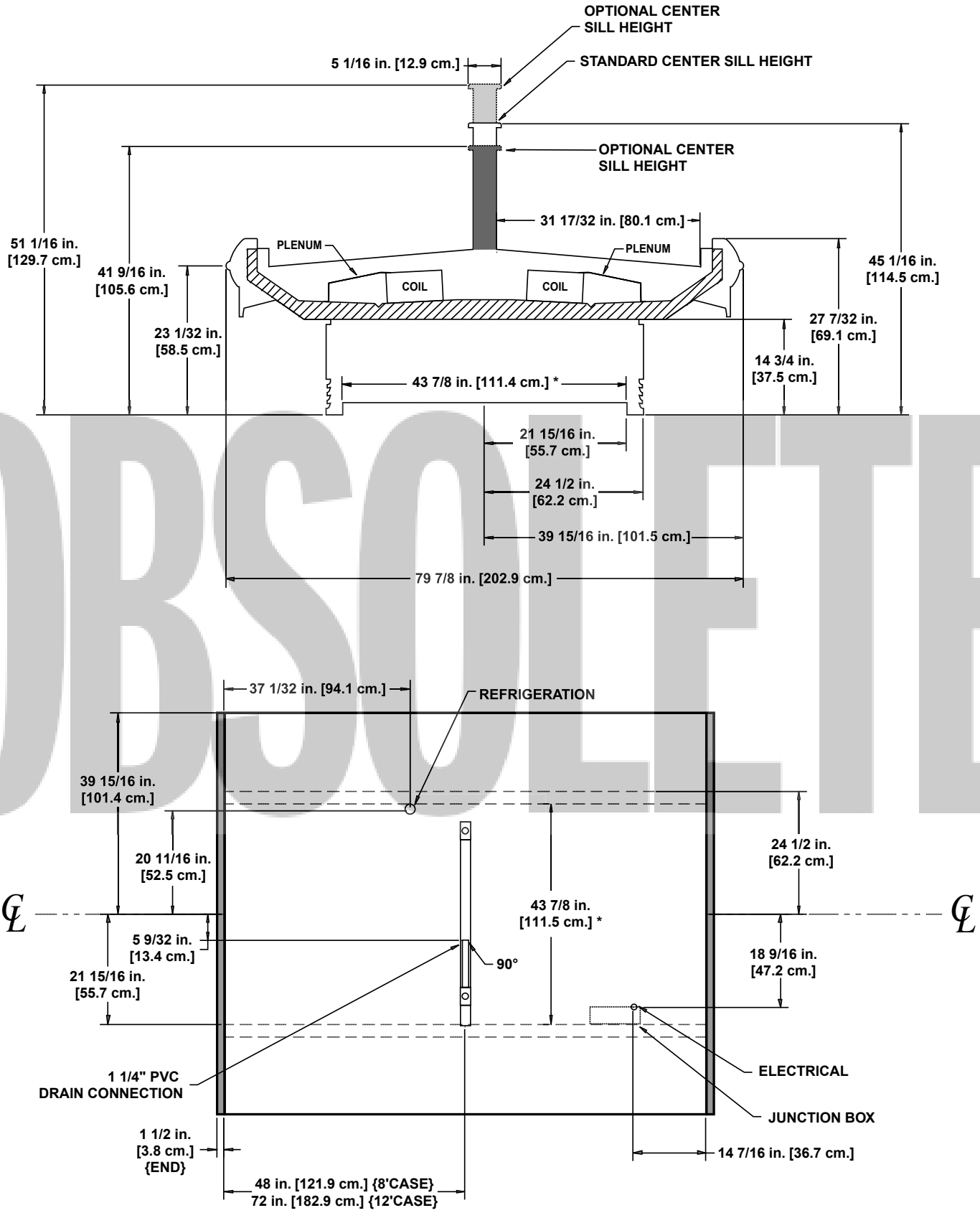

OBSOLETE

NOTE:

* STUB-UP AREA

Wide Island Frozen Food/Ice Cream Merchandisers

OWIZ - 8' & 12' wide island freezer
OWIZ(G) - 8' & 12' wide island freezer with front glass

Electrical Data

Model		Fans per Case	Standard Fans 120 Volts Amps	Standard Fans 120 Volts Watts	High Efficiency Fans 120 Volts Amps	High Efficiency Fans 120 Volts Watts	Anti-Condensate[2] Heaters 120 Volts Amps	Anti-Condensate[2] Heaters 120 Volts Watts	Defrost Heaters[3] 208 Volts Amps	Defrost Heaters[3] 208 Volts Watts	Defrost Heaters[3] 240 Volts Amps	Defrost Heaters[3] 240 Volts Watts	Drain Heaters 120 Volts Amps	Drain Heaters 120 Volts Watts
OWIZ	F-8'[1]	4	1.36	68	0.60	44	3.19	383	7.69	1600	8.88	2130	0.26	30
	F-12'	6	2.04	102	0.90	66	4.81	577	11.54	2400	13.31	3195	0.26	30
	C-8'	4	1.36	68	0.60	44	3.19	383	11.54	2400	13.31	3195	0.26	30
	C-12'	6	2.04	102	0.90	66	4.81	577	17.31	3600	19.98	4795	0.26	30
OWIZ(G)	F-8'	4	1.36	68	0.60	44	4.58	550	7.69	1600	8.88	2130	0.26	30
	F-12'	6	2.04	102	0.90	66	6.68	802	11.54	2400	13.31	3195	0.26	30
	C-8'	4	1.36	68	0.60	44	4.58	550	11.54	2400	13.31	3195	0.26	30
	C-12'	6	2.04	102	0.90	66	6.68	802	17.31	3600	19.98	4795	0.26	30

[1] F = frozen food, C = ice cream.

[2] Anti-Condensate heater data for No Wrap End configuration. For solid fronts add 0.28 amps per wrap end. For glass fronts add 0.68 amps per wrap end.

[3] Defrost data for one side of case only.

OBSOLETE

Lighting Data[4]

Model		Typical per Light Row 120 Volts Amps	Typical per Light Row 120 Volts Watts	Maximum Lighting 120 Volts Amps	Maximum Lighting 120 Volts Watts
OWIZ/	8'	1.14	137	4.56	547
OWIZ(G)	12'	1.71	205	6.84	821

[4] Lighting is for cases with superstructures.

Guidelines & Control Settings

Model	BTUH/ft[5]	Evaporator °F	Discharge Air (°F)	Average Product (°F)	Return Air (°F)	Discharge Air Velocity[6] (FPM)
OWIZ-F	600	-18	-10	0	0	180
OWIZ-C	700	-33	-20	-4	-12	180
OWIZ(G)-F	600	-18	-12	0	0	180
OWIZ(G)-C	700	-33	-20	-4	-12	180

[5] BTUH's/ft listed are for parallel operation. Conventional ratings may be approximated by multiplying listed rating by 1.04.

[6] Average discharge air velocity at peak of defrost.

Defrost Controls

Model	Defrosts Per Day	Electric Defrost Fail-safe (min)	Electric Defrost Termination Temp. (°F)	Timed Off Defrost Fail-safe (min)	Timed Off Defrost Termination Temp. (°F)	Hot Gas Defrost Fail-safe (min)	Hot Gas Defrost Termination Temp. (°F)	Reverse Air Defrost Fail-safe (min)	Reverse Air Defrost Termination Temp. (°F)
OWIZ-F & C OWIZ(G)-F & C	1	60	49	- - -[7]	- - -	20	59	- - -	- - -

[7] NOTE: - - - not an option on this case model.

Low Temperature Defrost Schedule

No. Per Day	Hours
1	10 pm
2	6 am - 10 pm**

** Or immediately after store closing hour

All measurements are taken per CRMA specifications.

Hill PHOENIX EXCELLENCE™

A DOVER DIVERSIFIED COMPANY

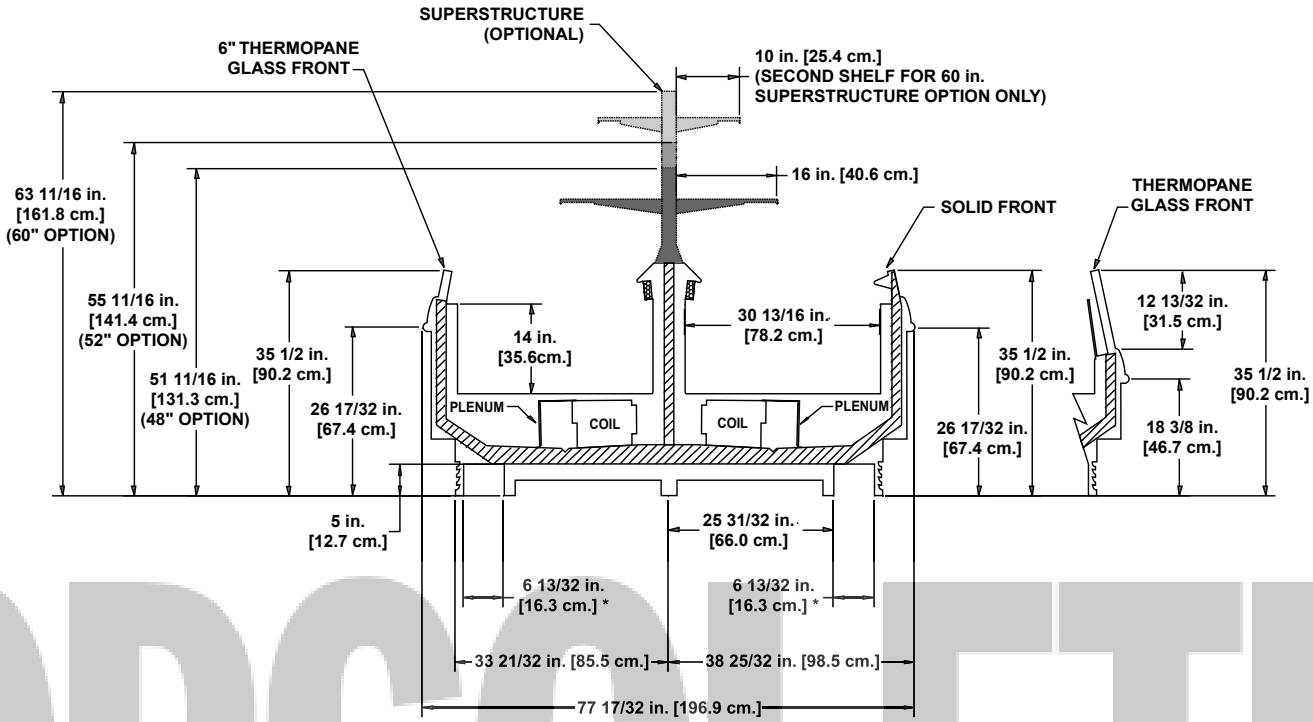

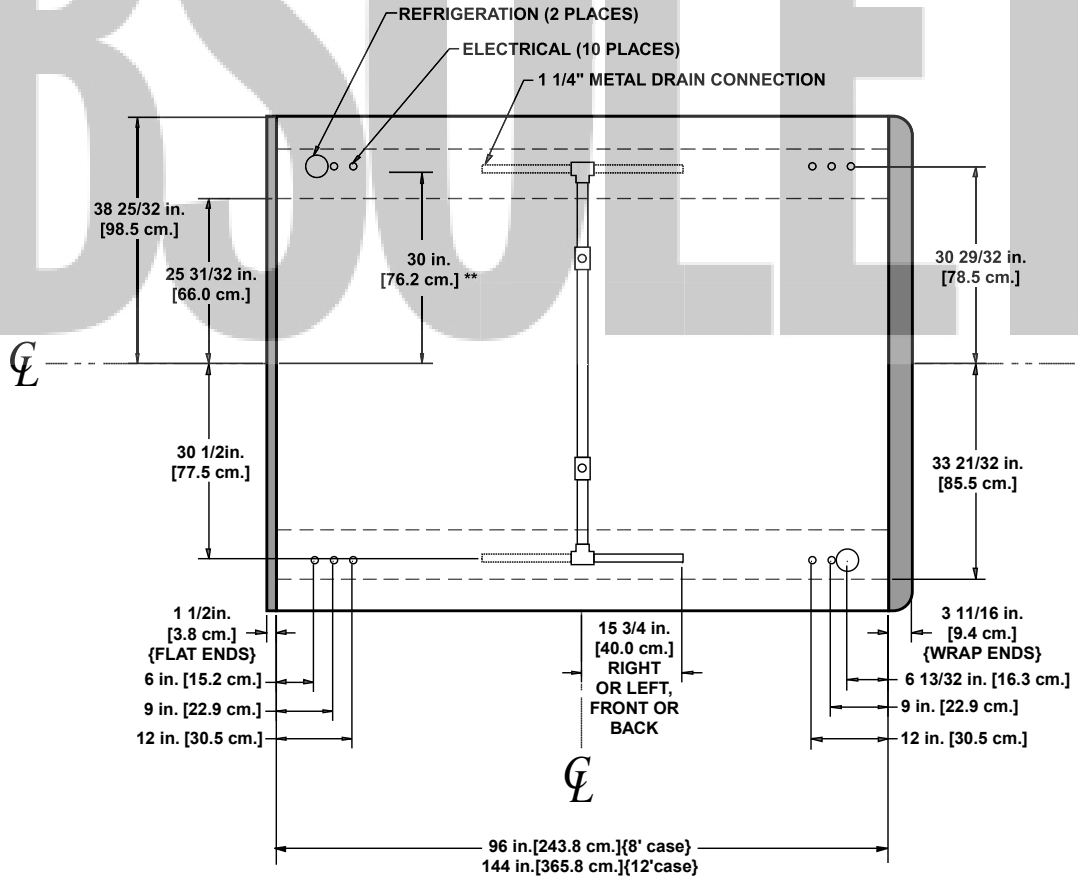

NOTES:

* STUB-UP AREA
** RECOMMENDED STUB-UP CENTERLINE FOR ELECTRICAL AND HUB DRAINS

OBSOLETE

Wide Island Frozen Food/Ice Cream Merchandisers

OWEZ - wide island freezer end case
OWEZ(G) - wide island freezer end case with front glass

Electrical Data

Model		Fans per Case	Standard Fans 120 Volts Amps	Standard Fans 120 Volts Watts	High Efficiency Fans 120 Volts Amps	High Efficiency Fans 120 Volts Watts	Anti-Condensate Heaters 120 Volts Amps	Anti-Condensate Heaters 120 Volts Watts	Defrost Heaters 208 Volts Amps	Defrost Heaters 208 Volts Watts	Defrost Heaters 240 Volts Amps	Defrost Heaters 240 Volts Watts	Drain Heater 120 Volts Amps	Drain Heater 120 Volts Watts
OWEZ	F[1]	2	0.68	34	0.30	22	1.56	187	5.77	1200	6.65	1596	0.13	15
	C	2	0.68	34	0.30	22	1.56	187	8.65	1800	9.98	2394	0.13	15
OWEZ(G)	F	2	0.68	34	0.30	22	2.46	295	5.77	1200	6.65	1596	0.13	15
	C	2	0.68	34	0.30	22	2.46	295	8.65	1800	9.97	2394	0.13	15

[1] F = Frozen food, C = Ice cream

Lighting Data

Model	Typical per Light Row 120 Volts Amps	Typical per Light Row 120 Volts Watts	Maximum Lighting 120 Volts Amps	Maximum Lighting 120 Volts Watts
OWEZ/	- - -[2]	- - -	- - -	- - -
OWEZ(G)	- - -	- - -	- - -	- - -

[2] NOTE: - - - not an option on this case model.

Guidelines & Control Settings

Model	BTUH/cs[3]	Evaporator °F	Discharge Air (°F)	Average Product (°F)	Return Air (°F)	Discharge Air Velocity[4] (FPM)
OWEZ-F	2700	-18	-12	0	0	200
OWEZ-C	3300	-33	-22	-1	-12	200
OWEZ(G)-F	2700	-18	-12	0	0	200
OWEZ(G)-C	3300	-33	-22	-1	-12	200

[5] BTUH's/case listed are for parallel operation. Conventional ratings may be approximated by multiplying listed rating by 1.04.

[6] Average discharge air velocity at peak of defrost.

Defrost Controls

Model	Defrosts Per Day	Electric Defrost Fail-safe (min)	Electric Defrost Termination Temp. (°F)	Timed Off Defrost Fail-safe (min)	Timed Off Defrost Termination Temp. (°F)	Hot Gas Defrost Fail-safe (min)	Hot Gas Defrost Termination Temp. (°F)	Reverse Air Defrost Fail-safe (min)	Reverse Air Defrost Termination Temp. (°F)
OWEZ-F & C OWEZ(G)-F & C	1	60	49	- - -	- - -	20	59	- - -	- - -

Low Temperature Defrost Schedule

No. Per Day	Hours
1	10 pm
2	6 am - 10 pm**

** Or immediately after store closing hour

All measurements are taken per CRMA specifications.

Hill PHOENIX EXCELLENCE™

A DOVER DIVERSIFIED COMPANY

OBSOLETE

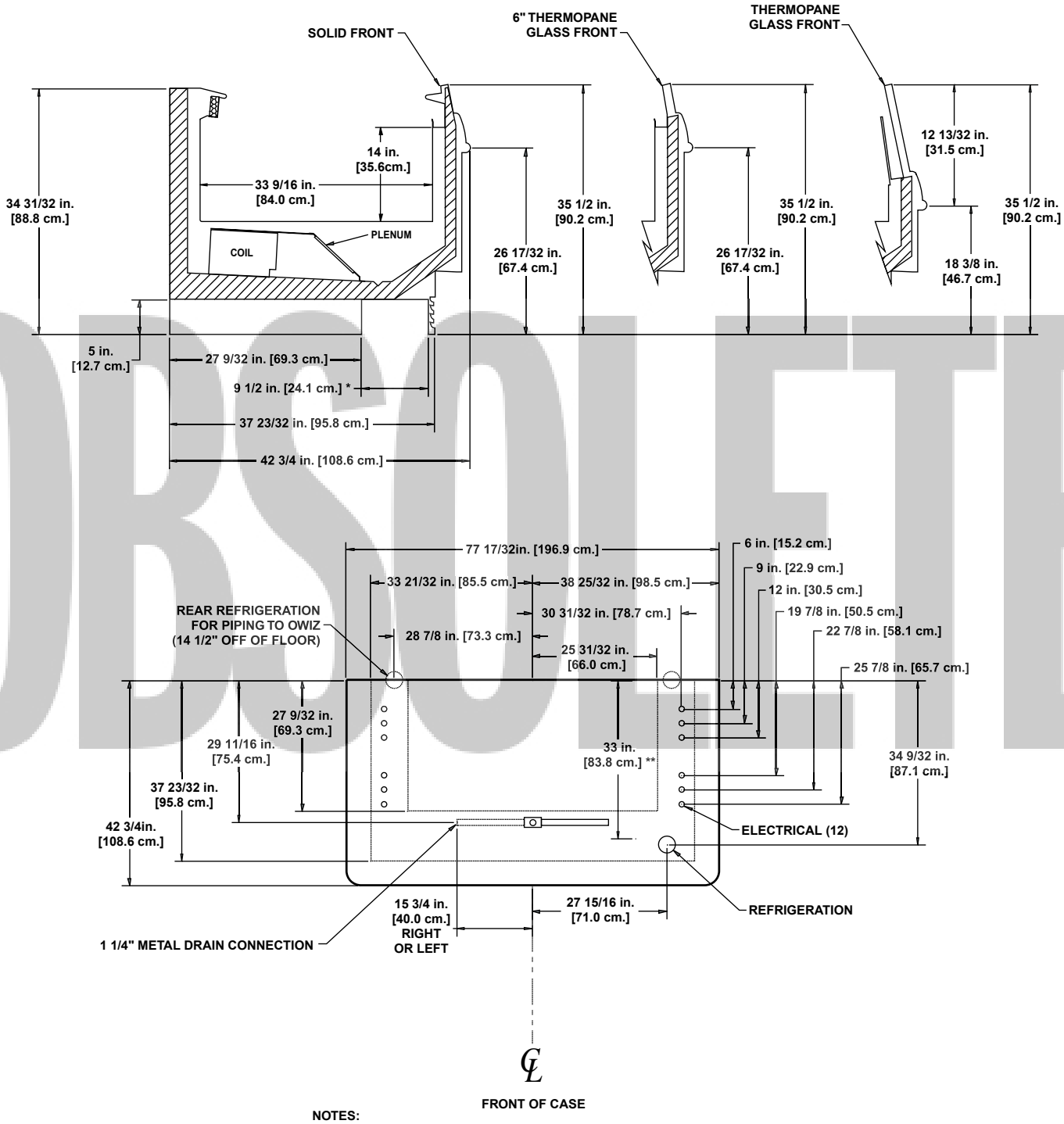

NOTES:

* STUB-UP AREA
** RECOMMENDED STUB-UP CENTERLINE FOR ELECTRICAL AND HUB DRAINS

OBSOLETE

Island Frozen Food Merchandisers

OIZ - 8' & 12' intermediate island freezer

Electrical Data

Model		Fans per Case	Standard Fans 120 Volts Amps	Standard Fans 120 Volts Watts	High Efficiency Fans 120 Volts Amps	High Efficiency Fans 120 Volts Watts	Anti-Condensate Heaters 120 Volts Amps	Anti-Condensate Heaters 120 Volts Watts	Defrost Heaters 208 Volts Amps	Defrost Heaters 208 Volts Watts	Defrost Heaters 240 Volts Amps	Defrost Heaters 240 Volts Watts	Drain Heater 120 Volts Amps	Drain Heater 120 Volts Watts
OIZ	8'	3	1.02	51	0.45	33	1.31	157	15.38	3200	17.75	4260	0.13	15
	12'	4	1.36	68	0.60	44	1.99	239	23.08	4800	26.63	6390	0.13	15

Lighting Data

Model		Typical per Light Row 120 Volts Amps	Typical per Light Row 120 Volts Watts	Maximum Lighting 120 Volts Amps	Maximum Lighting 120 Volts Watts
OIZ	8'	- - -[1]	- - -	- - -	- - -
	12'	- - -	- - -	- - -	- - -

[1] NOTE: - - - not an option on this case model.

Guidelines & Control Settings

Model	BTUH/ft[2]	Evaporator (°F)	Discharge Air (°F)	Average Product (°F)	Return Air (°F)	Discharge Air Velocity[3] (FPM)
OIZ[4]	520	-24	-12	-3	-4	200

[2] BTUH's/ft listed are for parallel operation. Conventional ratings may be approximated by multiplying listed rating by 1.04.

[3] Average discharge air velocity at peak of defrost.

[4] Not intended for Frozen Juice application

Defrost Controls

Model	Defrosts Per Day	Electric Defrost Fail-safe (min)	Electric Defrost Termination Temp. (°F)	Timed Off Defrost Fail-safe (min)	Timed Off Defrost Termination Temp. (°F)	Hot Gas Defrost Fail-safe (min)	Hot Gas Defrost Termination Temp. (°F)	Reverse Air Defrost Fail-safe (min)	Reverse Air Defrost Termination Temp. (°F)
OIZ	1	45	43	- - -	- - -	20	59	- - -	- - -

Low Temperature Defrost Schedule

No. Per Day	Hours
1	10 pm
2	6 am - 10 pm**

** Or immediately after store closing hour

All measurements are taken per CRMA specifications.

Hill PHOENIX™ EXCELLENCE

A DOVER DIVERSIFIED COMPANY

OBSOLETE

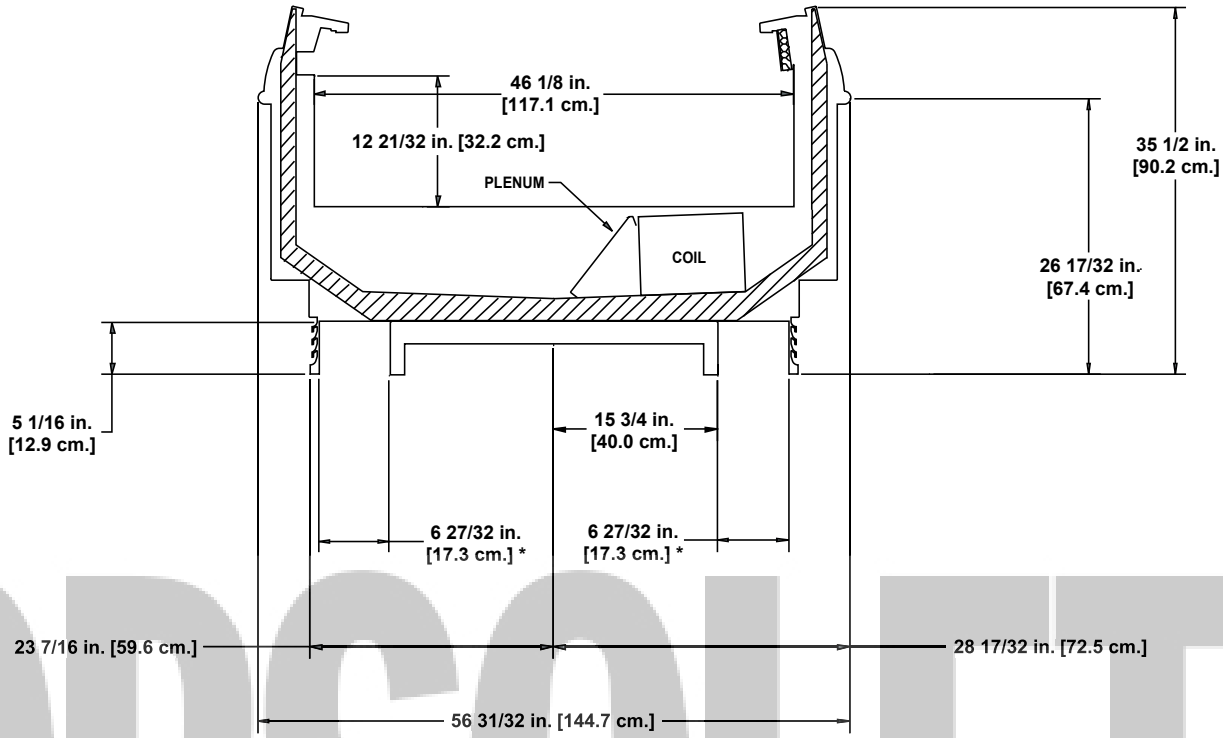

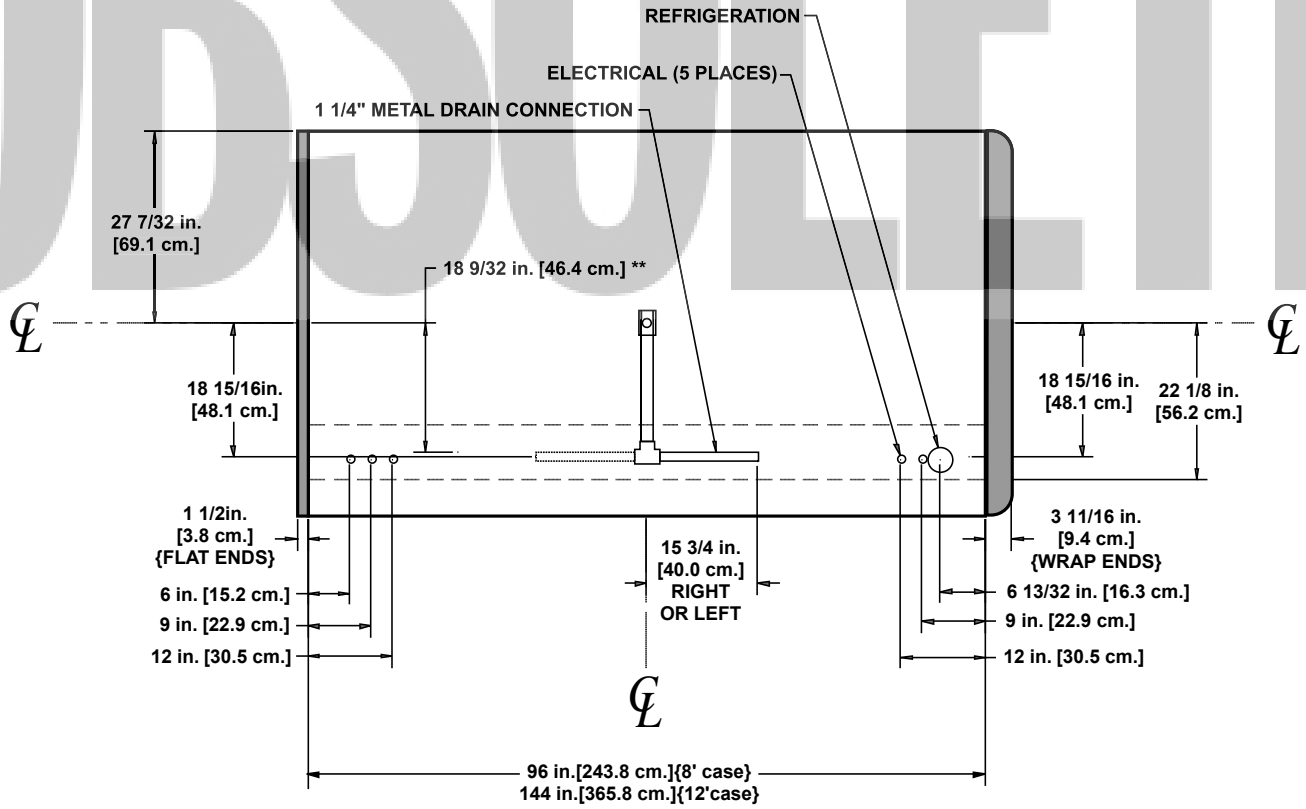

NOTES:

* STUB-UP AREA
** RECOMMENDED STUB-UP CENTERLINE FOR ELECTRICAL AND HUB DRAINS

OBSOLETE

Narrow Island Frozen Food/Ice Cream Merchandisers

ONIZ - 8’ & 12’ narrow island freezer
ONIZ(G) - 8’ & 12’ narrow island freezer with front glass

Electrical Data

Model		Fans per Case	Standard Fans 120 Volts Amps	Standard Fans 120 Volts Watts	High Efficiency Fans 120 Volts Amps	High Efficiency Fans 120 Volts Watts	Anti-Condensate[2] Heaters 120 Volts Amps	Anti-Condensate[2] Heaters 120 Volts Watts	Defrost Heaters[3] 208 Volts Amps	Defrost Heaters[3] 208 Volts Watts	Defrost Heaters[3] 240 Volts Amps	Defrost Heaters[3] 240 Volts Watts	Drain Heaters 120 Volts Amps	Drain Heaters 120 Volts Watts
ONIZ	F-8’[1]	2	0.68	34	0.30	22	1.46	175	7.69	1600	8.88	2130	0.13	15
	F-12’	3	1.02	51	0.45	33	1.87	224	11.54	2400	13.31	3195	0.13	15
	C-8’	2	0.68	34	0.30	22	1.46	175	15.38	3200	17.75	4260	0.13	15
	C-12’	3	1.02	51	0.45	33	1.87	224	23.08	4800	26.63	6390	0.13	15
ONIZ(G)	F-8’	2	0.68	34	0.30	22	3.12	374	7.69	1600	8.88	2130	0.13	15
	F-12’	3	1.02	51	0.45	33	3.40	408	11.54	2400	13.31	3195	0.13	15
	C-8’	2	0.68	34	0.30	22	3.12	374	15.38	3200	17.75	4260	0.13	15
	C-12’	3	1.02	51	0.45	33	3.40	408	23.08	4800	26.63	6390	0.13	15

[1] F = Frozen food, C = Ice cream.

OBSOLETE

Lighting Data

Model		Typical per Light Row 120 Volts Amps	Typical per Light Row 120 Volts Watts	Maximum Lighting 120 Volts Amps	Maximum Lighting 120 Volts Watts
ONIZ/ONIZ(G)-F	8’	- - -[2]	- - -	- - -	- - -
	12’	- - -	- - -	- - -	- - -
ONIZ/ONIZ(G)-C	8’	- - -	- - -	- - -	- - -
	12’	- - -	- - -	- - -	- - -

[2] NOTE: - - - not an option on this case model.

Guidelines & Control Settings

Model	BTUH/ft[3]	Evaporator (°F)	Discharge Air (°F)	Average Product (°F)	Return Air (°F)	Discharge Air Velocity[4] (FPM)
ONIZ/ONIZ(G)-F	369	-23	-12	-1	0	180
ONIZ/ONIZ(G)-C	412	-33	-22	-11	-9	180

[3] BTUH's/ft listed are for parallel operation. Conventional ratings may be approximated by multiplying listed rating by 1.04.

[4] Average discharge air velocity at peak of defrost.

Defrost Controls

Model	Defrosts Per Day	Electric Defrost Fail-safe (min)	Electric Defrost Termination Temp. (°F)	Timed Off Defrost Fail-safe (min)	Timed Off Defrost Termination Temp. (°F)	Hot Gas Defrost Fail-safe (min)	Hot Gas Defrost Termination Temp. (°F)	Reverse Air Defrost Fail-safe (min)	Reverse Air Defrost Termination Temp. (°F)
ONIZ/ONIZ(G)-F	1	48	47	- - -	- - -	20	59	- - -	- - -
ONIZ/ONIZ(G)-C	1	48	47	- - -	- - -	20	59	- - -	- - -

Low Temperature Defrost Schedule

No. Per Day	Hours
1	10 pm
2	6 am - 10 pm**

** Or immediately after store closing hour

All measurements are taken per CRMA specifications.

Hill PHOENIX EXCELLENCE™
A DOVER DIVERSIFIED COMPANY
5/99

OBSOLETE

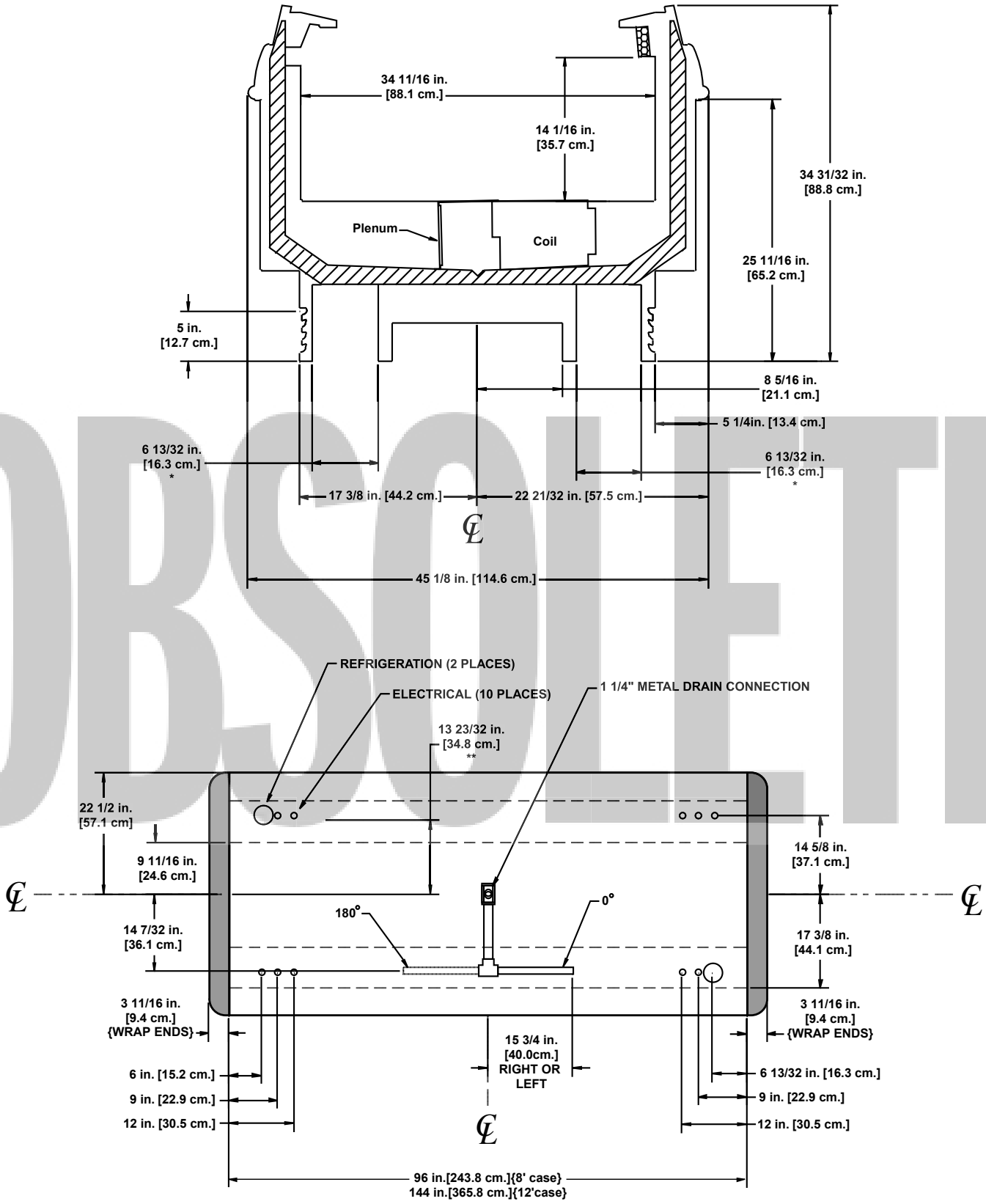

NOTES:

* STUB-UP AREA
** RECOMMENDED STUB-UP CENTERLINE FOR ELECTRICAL AND HUB DRAINS

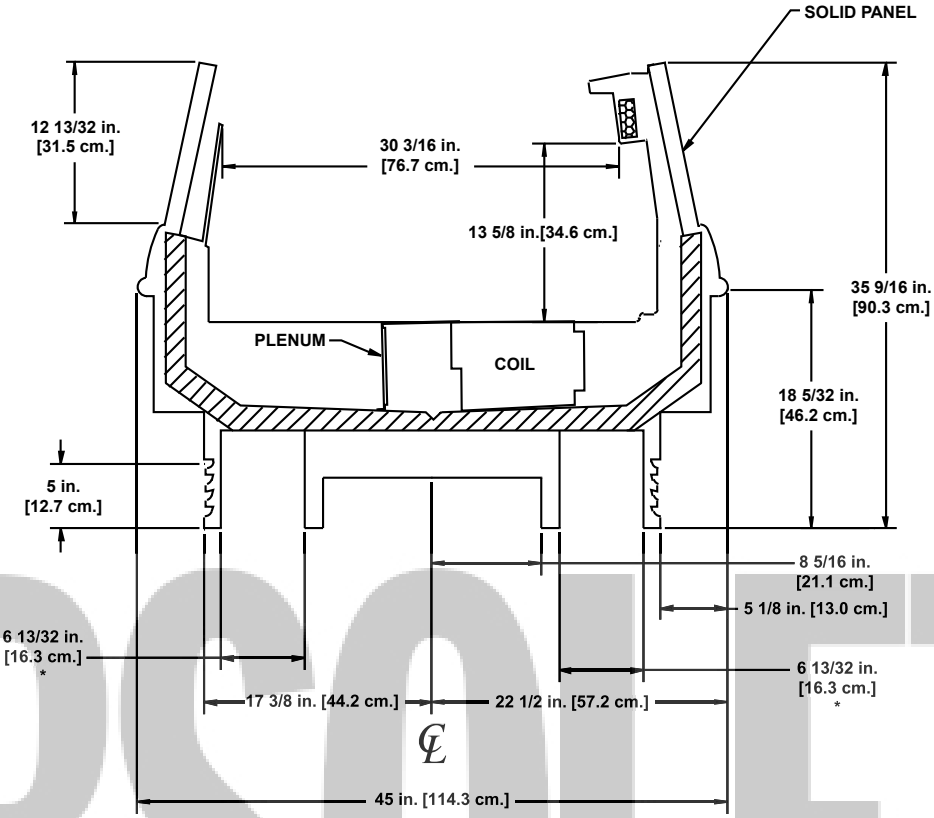

OBSOLETE

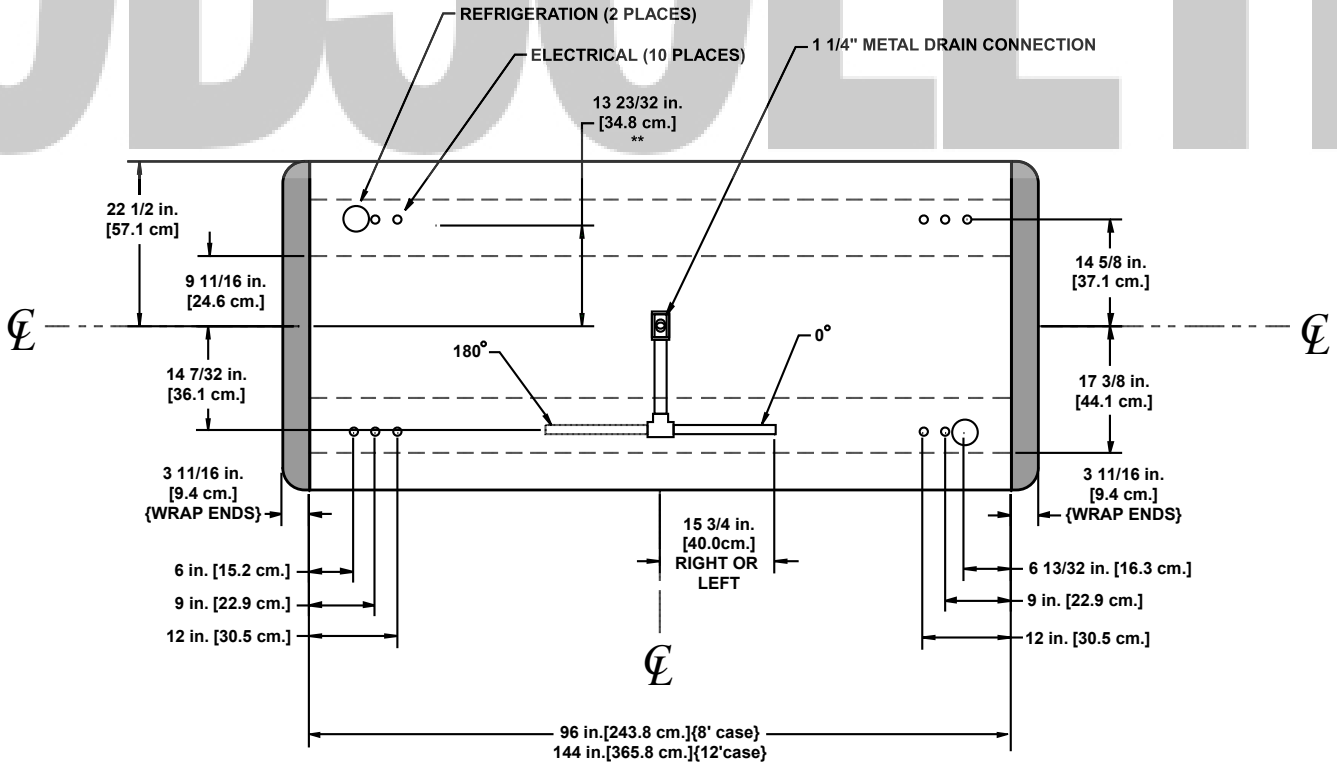

NOTES:

OBSOLETE

Multi-Deck Island Merchandisers

Notes:

- *Average product temperatures are calculated as defined by ASHRAE* standards and should not be used to determine application.*
- *Allow for an extra 1/8" per joint when lining up merchandisers.*
- *Front sill height does not affect case performance unless specifically shown.*

* *American Society of Heating Refrigeration and Air Conditioning Engineers*

Wide Island Multi-Deck Cheese Merchandisers

O3IC - 8’ & 12’ wide island double wraparound end
O3IC(B) - 6’, 8’, & 12’ wide island single wraparound end

Electrical Data

			Standard Fans		Hi Efficiency Fans		Anti-Condensate Heaters		Defrost Heaters			
		Fans per Case	120 Volts		120 Volts		120 Volts		208 Volts		240 Volts	
			Amps	Watts	Amps	Watts	Amps	Watts	Amps	Watts	Amps	Watts
O3IC	8’	6	2.04	102	0.90	66	0.82	98	4.34	902	5.00	1200
	12’	8	2.72	136	1.20	88	1.08	130	7.22	1502	8.33	2000
O3IC(B)	6’	4	1.36	76	0.60	44	0.57	68	3.25	676	3.75	900
	8’	6	2.04	102	0.90	66	0.75	90	4.34	902	5.00	1200
	12’	8	2.72	136	1.20	88	1.17	141	7.22	1502	8.33	2000

Lighting Data

		Typical per Light Row		Maximum Lighting	
		120 Volts		120 Volts	
Model		Amps	Watts	Amps	Watts
O3IC	8’	NA[1]	NA	5.71	546
	12’	NA	NA	7.46	779
O3IC(B)	6’	NA	NA	3.50	363
	8’	NA	NA	4.76	514
	12’	NA	NA	6.02	665

[1] Not applicable.

OBSOLETE

Guidelines & Control Settings

Model	BTUH/ft[2]	Evaporator (°F)	Discharge Air (°F)	Average Product (°F)	Return Air (°F)	Discharge Air Velocity[4] (FPM)
O3IC/O3IC(B)	1150[3]	17	29	37	48	160

[2] BTUH's/ft listed are for parallel operation. Conventional ratings may be approximated by multiplying listed rating by 1.04.
[3] Add 700 BTUH per wrap end.
[4] Average discharge air velocity at peak of defrost.

Defrost Controls

		Electric Defrost		Timed Off Defrost		Hot Gas Defrost		Reverse Air Defrost	
Model	Defrosts per Day	Fail-safe (min)	Termination Temp. (°F)	Fail-safe (min)	Termination Temp. (°F)	Fail-safe (min)	Termination Temp. (°F)	Fail-safe (min)	Termination Temp. (°F)
O3IC/O3IC(B)	4	30	55	- - -[5]	- - -	26	55	- - -	- - -

[5] NOTE: --- not an option on this case model.

Medium Temperature Defrost Schedule

No. Per Day	Hours
1	12 midnight
2	12 am - 12 pm
3	6 am - 2 pm - 10 pm
4	12 - 6 am - 12 - 6 pm

Hill PHOENIX™ EXCELLENCE

A DOVER DIVERSIFIED COMPANY

All measurements are taken per CRMA specifications.

O3IC

(14 3/4" BASEFRAME)

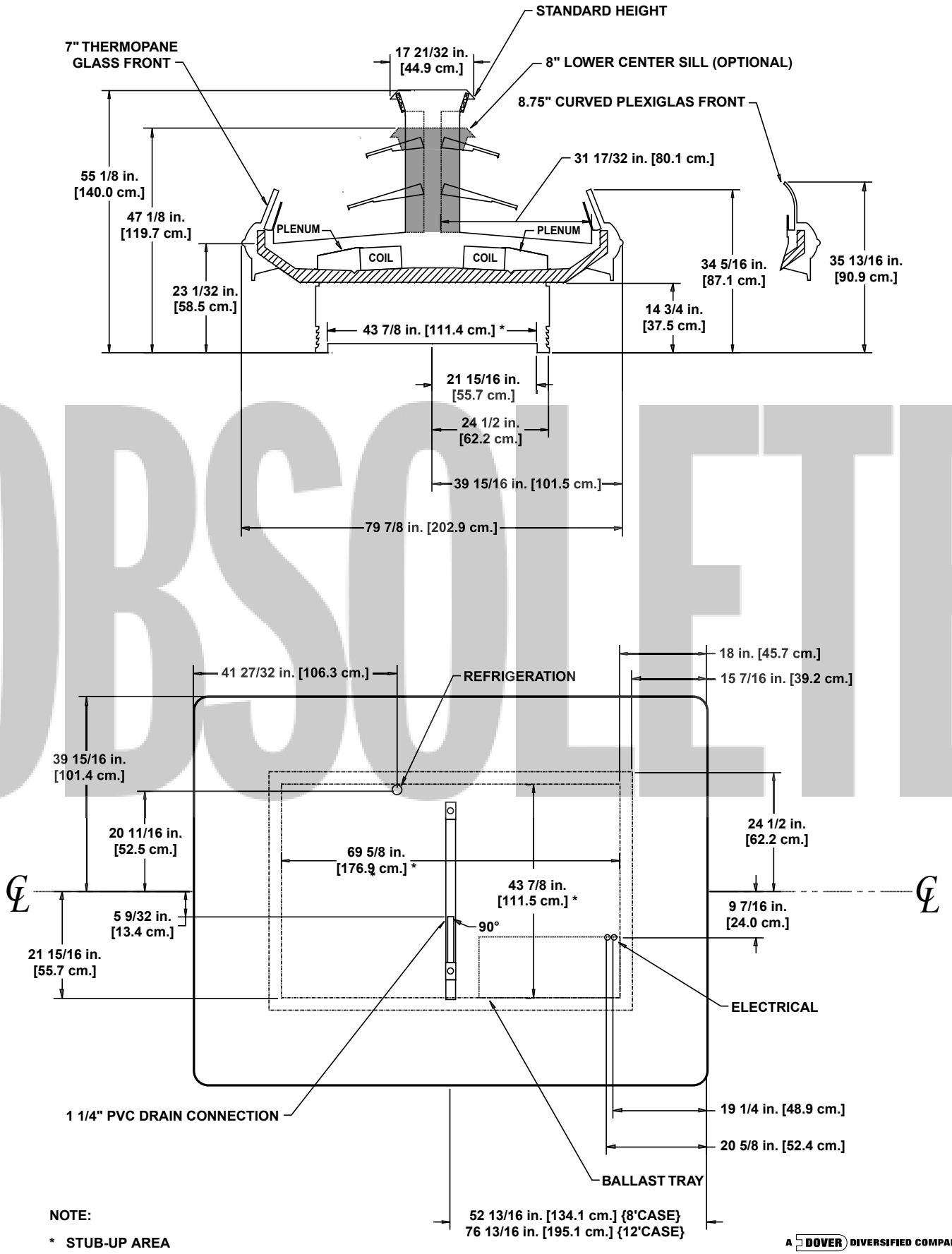

NOTE:

* STUB-UP AREA

OBSOLETE

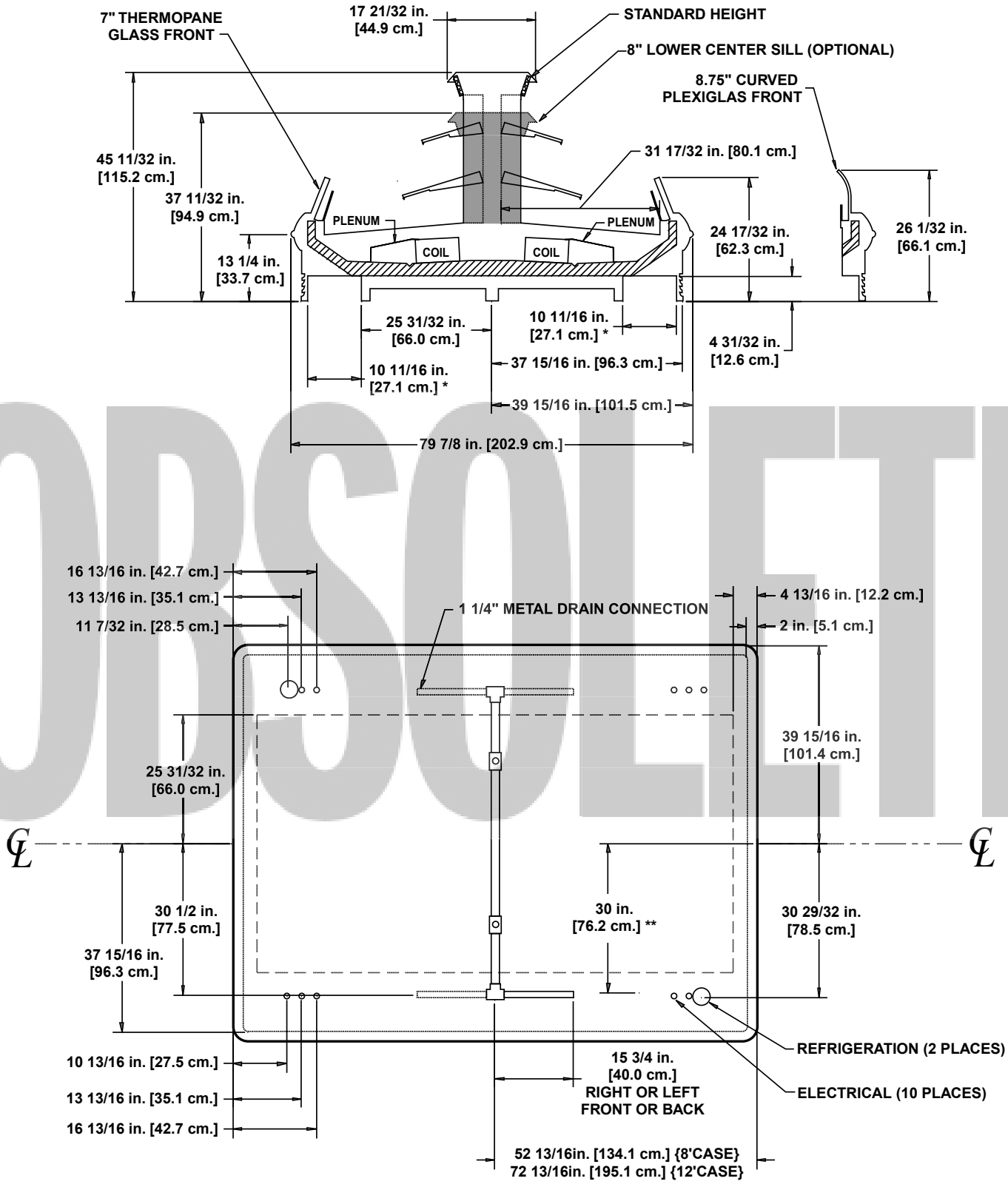

OBSOLETE

NOTES:

* STUB-UP AREA
** RECOMMENDED STUB-UP CENTERLINE FOR ELECTRICAL AND HUB DRAINS

O3IC(B)

(14 3/4" BASEFRAME)

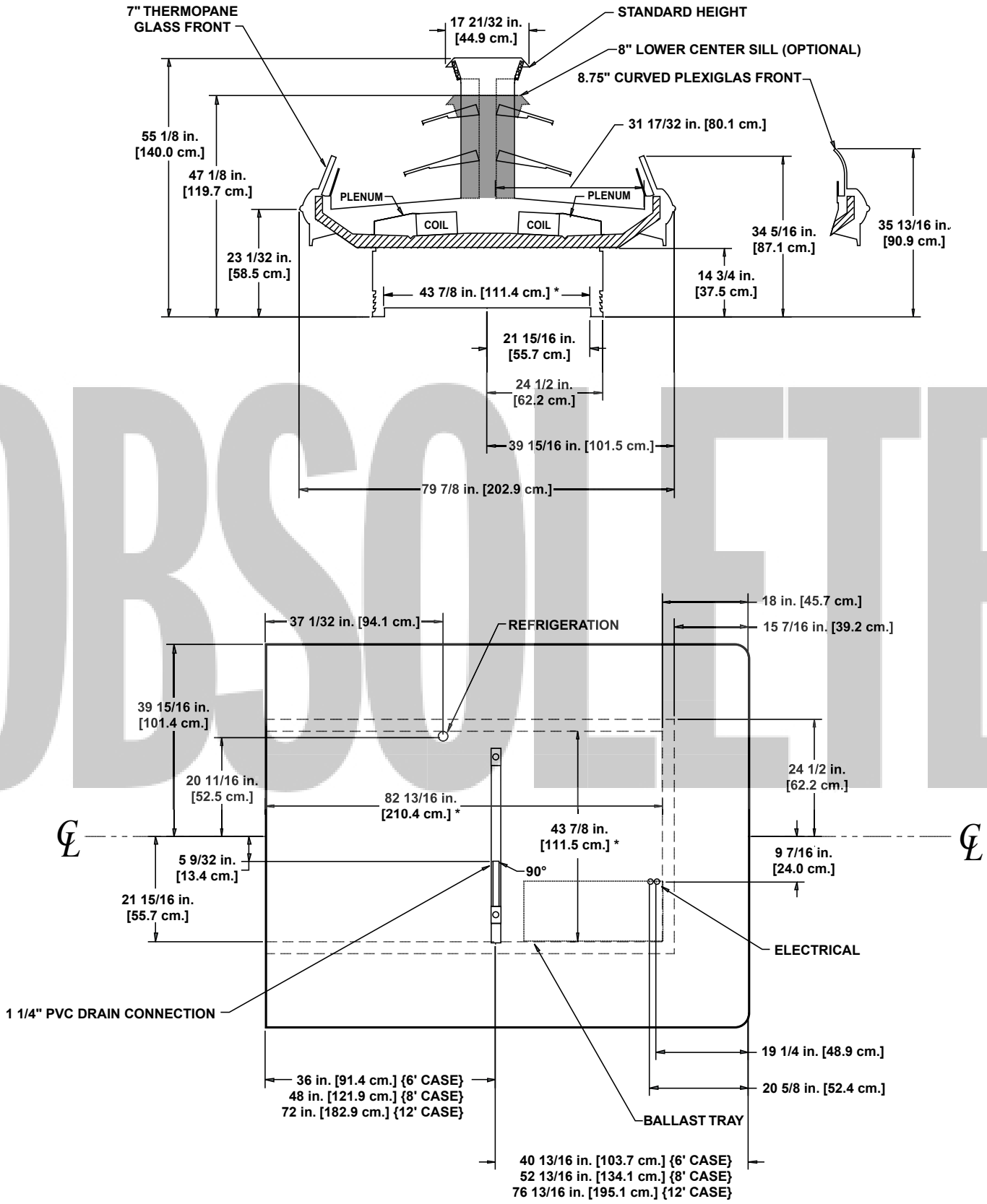

NOTE:

* STUB-UP AREA

OBSOLETE

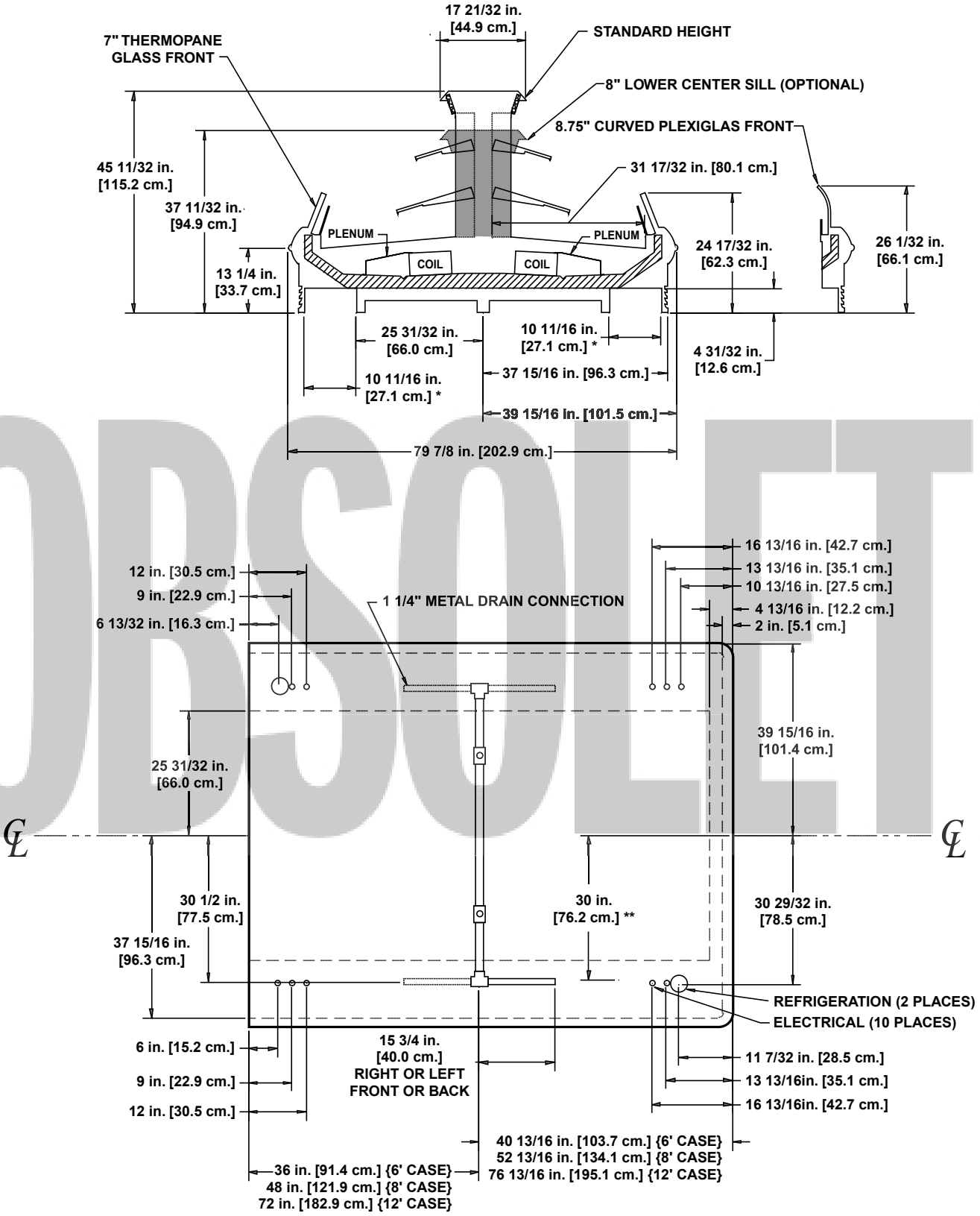

OBSOLETE

NOTES:

* STUB-UP AREA
** RECOMMENDED STUB-UP CENTERLINE FOR ELECTRICAL AND HUB DRAINS

OBSOLETE

MULTI-DECK ISLAND

Cheese

Wide Island Multi-Deck Produce Merchandisers

O3IP - 8' & 12' wide island double wraparound end
O3IP(B) - 8' & 12' wide island single wraparound end

Electrical Data

		Fans per Case	Standard Fans		Hi Efficiency Fans		Anti-Condensate Heaters		Defrost Heaters			
			120 Volts		120 Volts		120 Volts		208 Volts		240 Volts	
			Amps	Watts	Amps	Watts	Amps	Watts	Amps	Watts	Amps	Watts
O3IP	8'	6	2.04	102	0.90	66	0.82	98	- - -[1]	- - -	- - -	- - -
	12'	8	2.72	136	1.20	88	1.08	130	- - -	- - -	- - -	- - -
O3IP(B)	8'	6	2.04	102	0.90	66	0.75	90	- - -	- - -	- - -	- - -
	12'	8	2.72	136	1.20	88	1.17	140	- - -	- - -	- - -	- - -

[1] NOTE: --- not an option on this case model.

Lighting Data

Model		Typical per Light Row		Maximum Lighting	
		120 Volts		120 Volts	
		Amps	Watts	Amps	Watts
O3IP	8'	NA[2]	NA	5.71	546
	12'	NA	NA	7.46	779
O3IP(B)	8'	NA	NA	4.76	514
	12'	NA	NA	6.02	665

[2] Not applicable.

OBSOLETE

Guidelines & Control Settings

Model	BTUH/ft[3]	Evaporator (°F)	Discharge Air (°F)	Average Product (°F)	Return Air (°F)	Discharge Air Velocity[5] (FPM)
O3IP/O3IP(B)	1050[4]	22	34	41	48	160

[3] BTUH's/ft listed are for parallel operation. Conventional ratings may be approximated by multiplying listed rating by 1.04.
[4] Add 650 BTUH per wrap end.
[5] Average discharge air velocity at peak of defrost.

Defrost Controls

Model	Defrosts per Day	Electric Defrost		Timed Off Defrost		Hot Gas Defrost		Reverse Air Defrost	
		Fail-safe (min)	Termination Temp. (°F)	Fail-safe (min)	Termination Temp. (°F)	Fail-safe (min)	Termination Temp. (°F)	Fail-safe (min)	Termination Temp. (°F)
O3IP/O3IP(B)	4	- - -	- - -	44	38	- - -	- - -	- - -	- - -

Medium Temperature Defrost Schedule

No. Per Day	Hours
1	12 midnight
2	12 am - 12 pm
3	6 am - 2 pm - 10 pm
4	12 - 6 am - 12 - 6 pm

A DOVER DIVERSIFIED COMPANY

All measurements are taken per CRMA specifications.

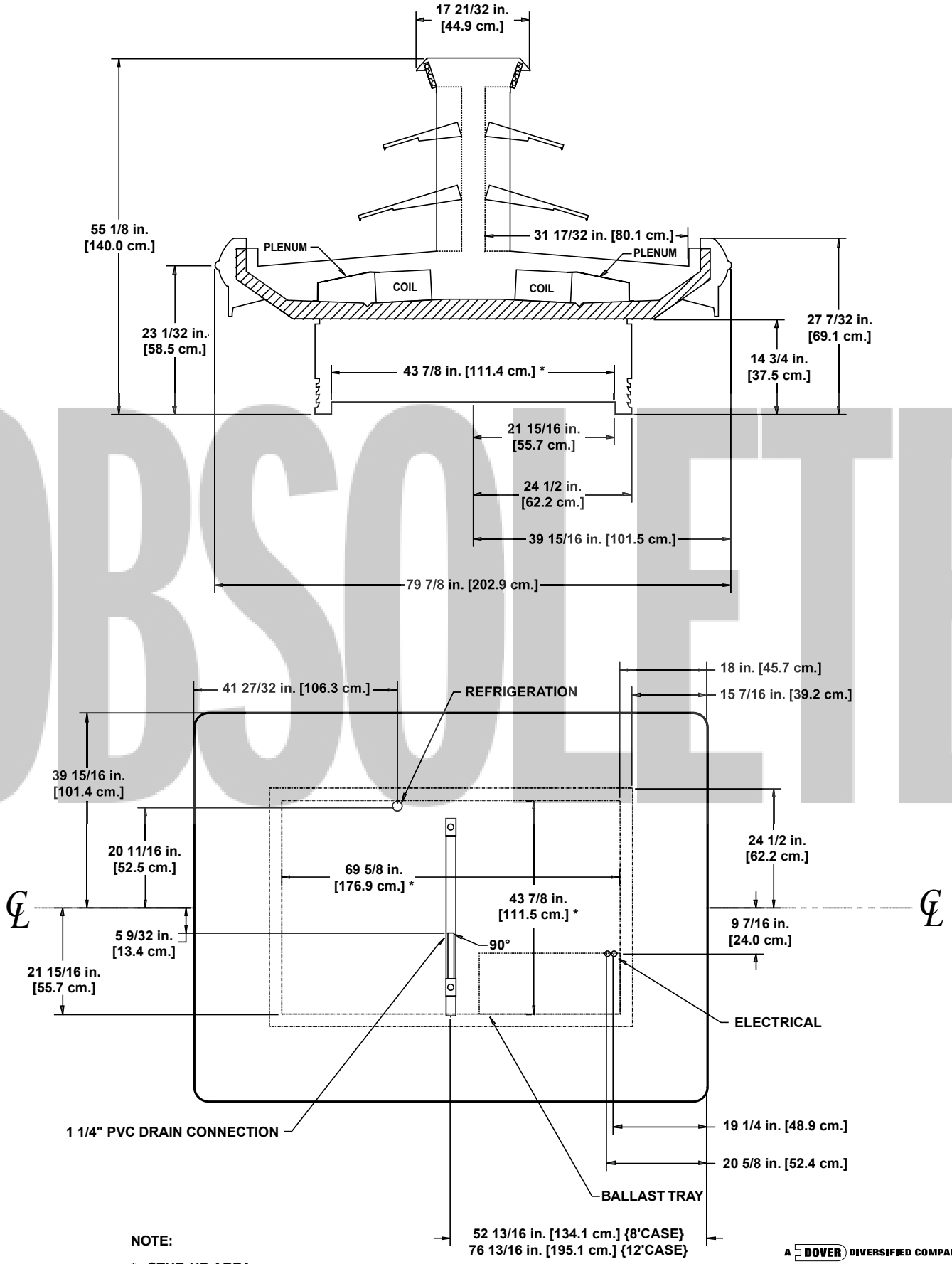

NOTE:

* STUB-UP AREA

OBSOLETE

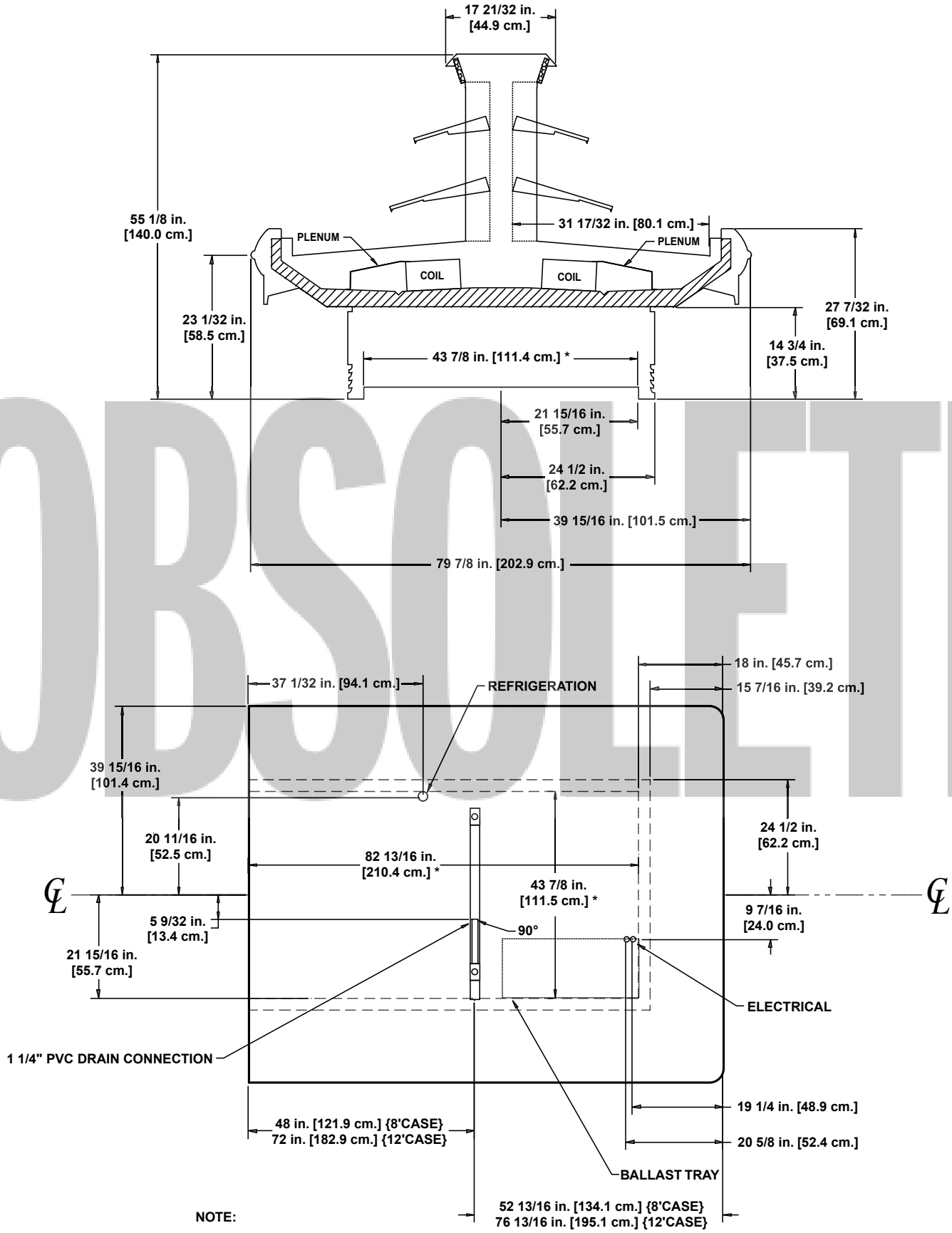

NOTE:

* STUB-UP AREA

OBSOLETE

OBSOLETE

Service Merchandisers

Notes:

- *Average product temperatures are calculated as defined by ASHRAE* standards and should not be used to determine application.*
- *Cases meet FDA** Food Code 1997 product temperature requirements (41°F or less) for hazardous foods when used for their prescribed applications.*
- *Allow for an extra 1/8" per joint when lining up merchandisers.*
- *Front sill height does not affect case performance unless specifically shown.*

* *American Society of Heating Refrigeration and Air Conditioning Engineers*

** *Food and Drug Administration*

American Style Deli Merchandisers

OSA - 4', 6', 8', & 12' american style full service

Electrical Data

Model		Fans per Case	Standard Fans 120 Volts Amps	Standard Fans 120 Volts Watts	High Efficiency Fans 120 Volts Amps	High Efficiency Fans 120 Volts Watts	Anti-Condensate Heaters[1] 120 Volts Amps	Anti-Condensate Heaters[1] 120 Volts Watts	Defrost Heaters 208 Volts Amps	Defrost Heaters 208 Volts Watts	Defrost Heaters 240 Volts Amps	Defrost Heaters 240 Volts Watts
OSA	4'	2	0.68	34	0.30	22	0.17	20	1.92	400	2.22	532
	6'	2	0.68	34	0.30	22	0.42	50	2.88	600	3.33	798
	8'	3	1.02	51	0.45	33	0.97	116	3.85	800	4.44	1065
	12'	4	1.36	68	0.60	44	1.50	180	5.77	1200	6.67	1600

Lighting Data

Model		Typical per Light Row 120 Volts Amps	Typical per Light Row 120 Volts Watts	Maximum Lighting 120 Volts Amps	Maximum Lighting 120 Volts Watts
OSA	4'	0.57	68	1.71	205
	6'	0.57	68	2.41	289
	8'	0.57	68	2.41	289
	12'	0.77	92	3.85	462

OBSOLETE

Guidelines & Control Settings

Model	BTUH/ft[1]	Evaporator (°F)	Discharge Air (°F)	Average Product (°F)	Return Air (°F)	Discharge Air Velocity[2] (FPM)
OSA w/ Shelf Lights	320	22	24	37	39	235
OSA w/o Shelf Lights	290	22	24	35	39	235

[1] BTUH's/ft listed are for parallel operation. Conventional ratings may be approximated by multiplying listed rating by 1.04.

[2] Average discharge air velocity at peak of defrost.

Defrost Controls

Model	Defrosts Per Day	Electric Defrost Fail-safe (min)	Electric Defrost Termination Temp. (°F)	Timed Off Defrost[3] Fail-safe (min)	Timed Off Defrost[3] Termination Temp. (°F)	Hot Gas Defrost Fail-safe (min)	Hot Gas Defrost Termination Temp. (°F)	Reverse Air Defrost Fail-safe (min)	Reverse Air Defrost Termination Temp. (°F)
OSA	2	35	50	75	50	- - -[4]	- - -	- - -	- - -

[3] Not recommended on this model due to long defrost time.

[4] NOTE: - - - not an option on this case model.

Medium Temperature Defrost Schedule

No. Per Day	Hours
1	12 midnight
2	12 am - 12 pm
3	6 am - 2 pm - 10 pm
4	12 - 6 am - 12 - 6 pm

All measurements are taken per CRMA specifications.

OSA
(11" BASEFRAME)

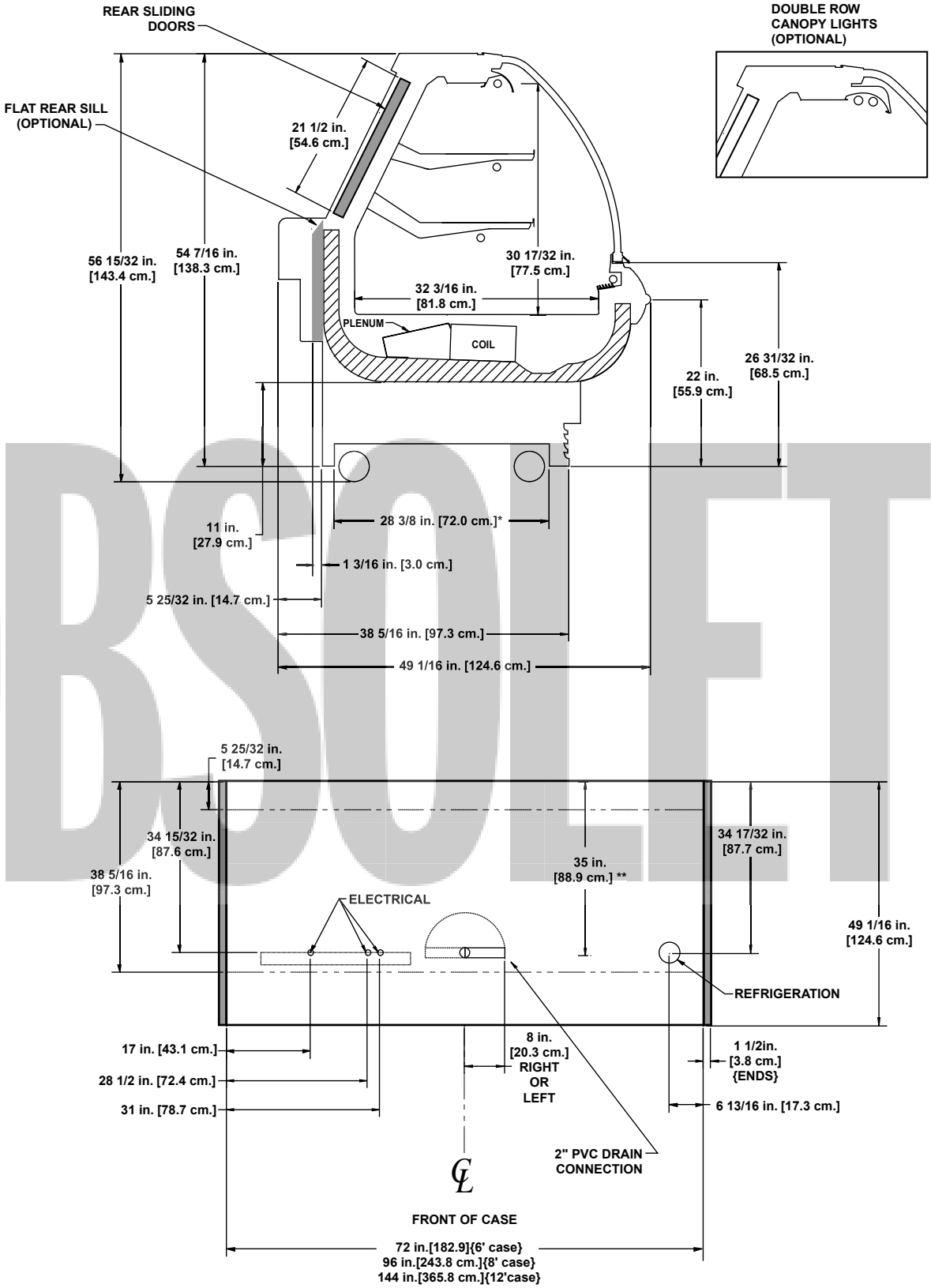

OBSOLETE

NOTES:

* STUB-UP AREA
** RECOMMENDED STUB-UP CENTERLINE FOR ELECTRICAL AND HUB DRAINS

• ENDS ADD APPROXIMATELY 1 INCH TO CASE HEIGHT

OSA

(5 5/32" BASEFRAME)

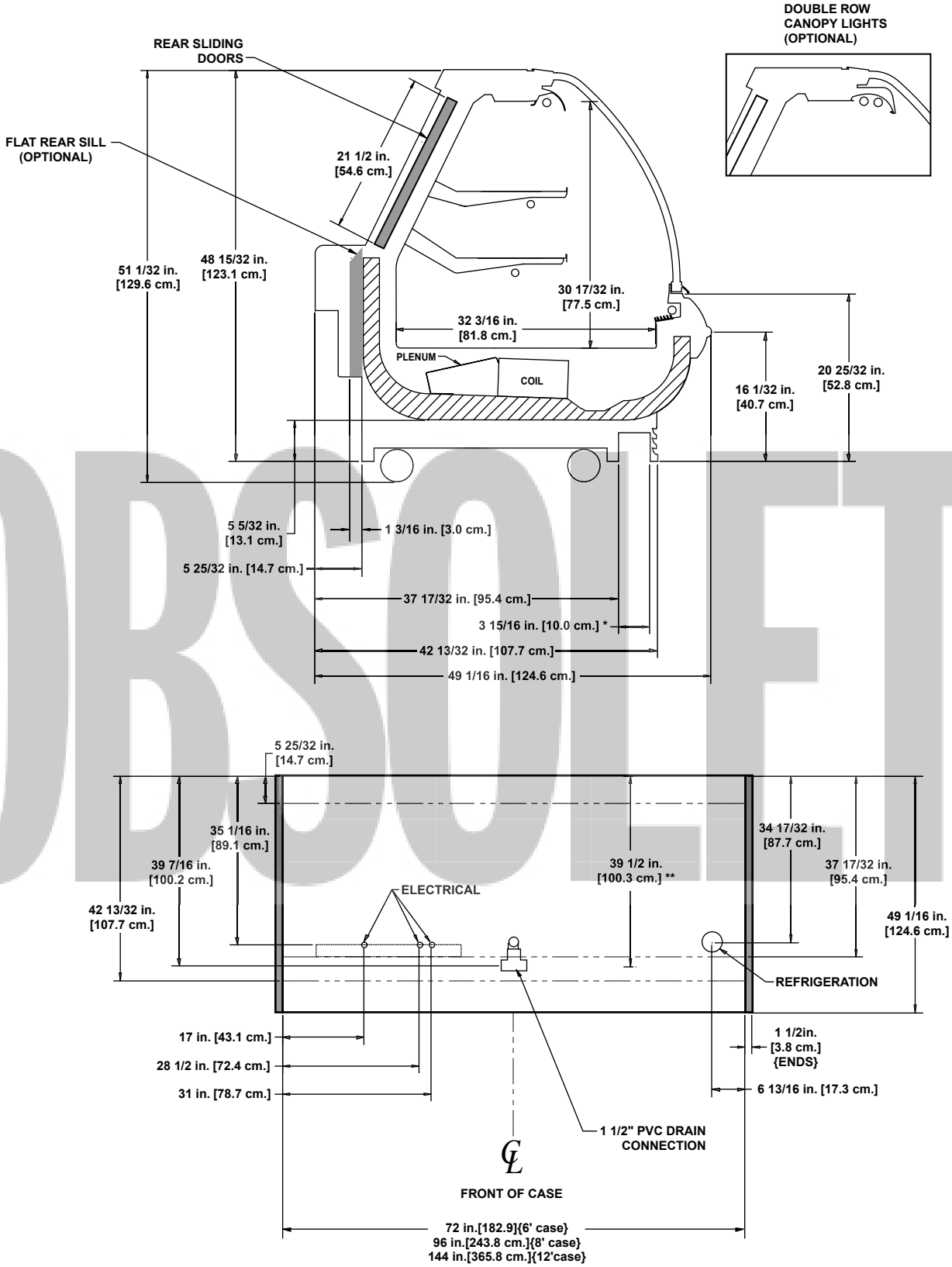

OBSOLETE

NOTES:

* STUB-UP AREA
** RECOMMENDED STUB-UP CENTERLINE FOR ELECTRICAL AND HUB DRAINS

• ENDS ADD APPROXIMATELY 1 INCH TO CASE HEIGHT

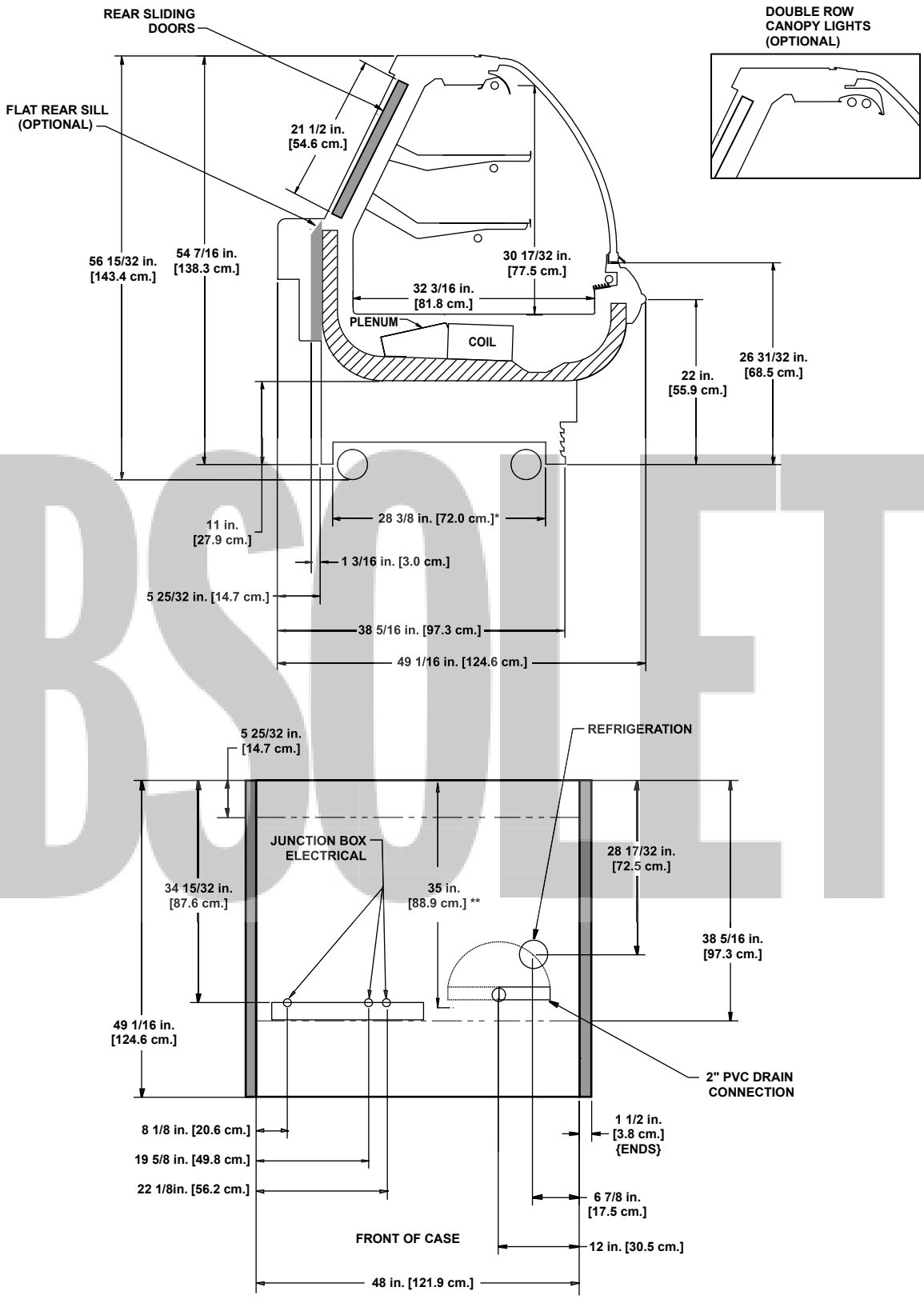

NOTES:

* STUB-UP AREA
** RECOMMENDED STUB-UP CENTERLINE FOR ELECTRICAL AND HUB DRAINS

• ENDS ADD APPROXIMATELY 1 INCH TO CASE HEIGHT

OBSOLETE

American Style Flat Glass Deli Merchandisers

OSM - 8' & 12' american style flat glass full service

Electrical Data

Model		Fans per Case	Standard Fans 120 Volts Amps	Standard Fans 120 Volts Watts	High Efficiency Fans 120 Volts Amps	High Efficiency Fans 120 Volts Watts	Anti-Condensate Heaters 120 Volts Amps	Anti-Condensate Heaters 120 Volts Watts	Defrost Heaters 208 Volts Amps	Defrost Heaters 208 Volts Watts	Defrost Heaters 240 Volts Amps	Defrost Heaters 240 Volts Watts
OSM	8'	3	1.02	51	0.45	33	0.97	116	3.85	800	4.44	1065
	12'	4	1.36	68	0.60	44	1.50	180	5.77	1200	6.67	1600

Lighting Data

Model		Typical per Light Row 120 Volts Amps	Typical per Light Row 120 Volts Watts	Maximum Lighting 120 Volts Amps	Maximum Lighting 120 Volts Watts
OSM	8'	0.57	68	2.06	247
	12'	0.77	92	3.08	370

OBSOLETE

Guidelines & Control Settings

Model	BTUH/ft[1]	Evaporator (°F)	Discharge Air (°F)	Average Product (°F)	Return Air (°F)	Discharge Air Velocity[2] (FPM)
OSM	320	22	24	37	39	235

[1] BTUH's/ft listed are for parallel operation. Conventional ratings may be approximated by multiplying listed rating by 1.04.

[2] Average discharge air velocity at peak of defrost.

Defrost Controls

Model	Defrosts Per Day	Electric Defrost Fail-safe (min)	Electric Defrost Termination Temp. (°F)	Timed Off Defrost[3] Fail-safe (min)	Timed Off Defrost[3] Termination Temp. (°F)	Hot Gas Defrost Fail-safe (min)	Hot Gas Defrost Termination Temp. (°F)	Reverse Air Defrost Fail-safe (min)	Reverse Air Defrost Termination Temp. (°F)
OSM	2	35	50	75	50	- - -[4]	- - -	- - -	- - -

[3] Not recommended on this model due to long defrost time.

[4] NOTE: - - - not an option on this case model.

Medium Temperature Defrost Schedule

No. Per Day	Hours
1	12 midnight
2	12 am - 12 pm
3	6 am - 2 pm - 10 pm
4	12 - 6 am - 12 - 6 pm

All measurements are taken per CRMA specifications.

OSM
(11" BASEFRAME)

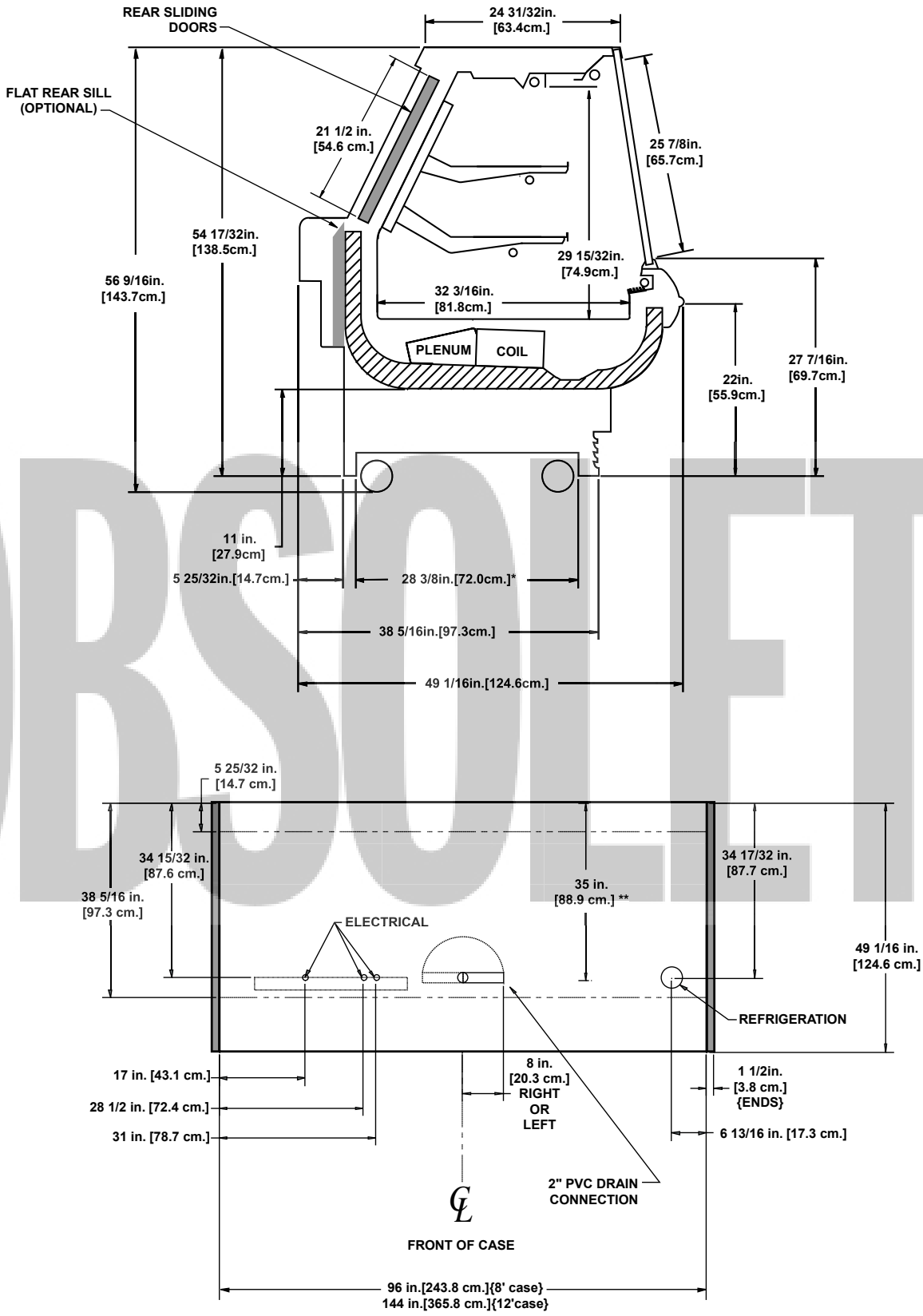

NOTES:

* STUB-UP AREA
** RECOMMENDED STUB-UP CENTERLINE FOR ELECTRICAL AND HUB DRAINS

• ENDS ADD APPROXIMATELY 1 INCH TO CASE HEIGHT

OBSOLETE

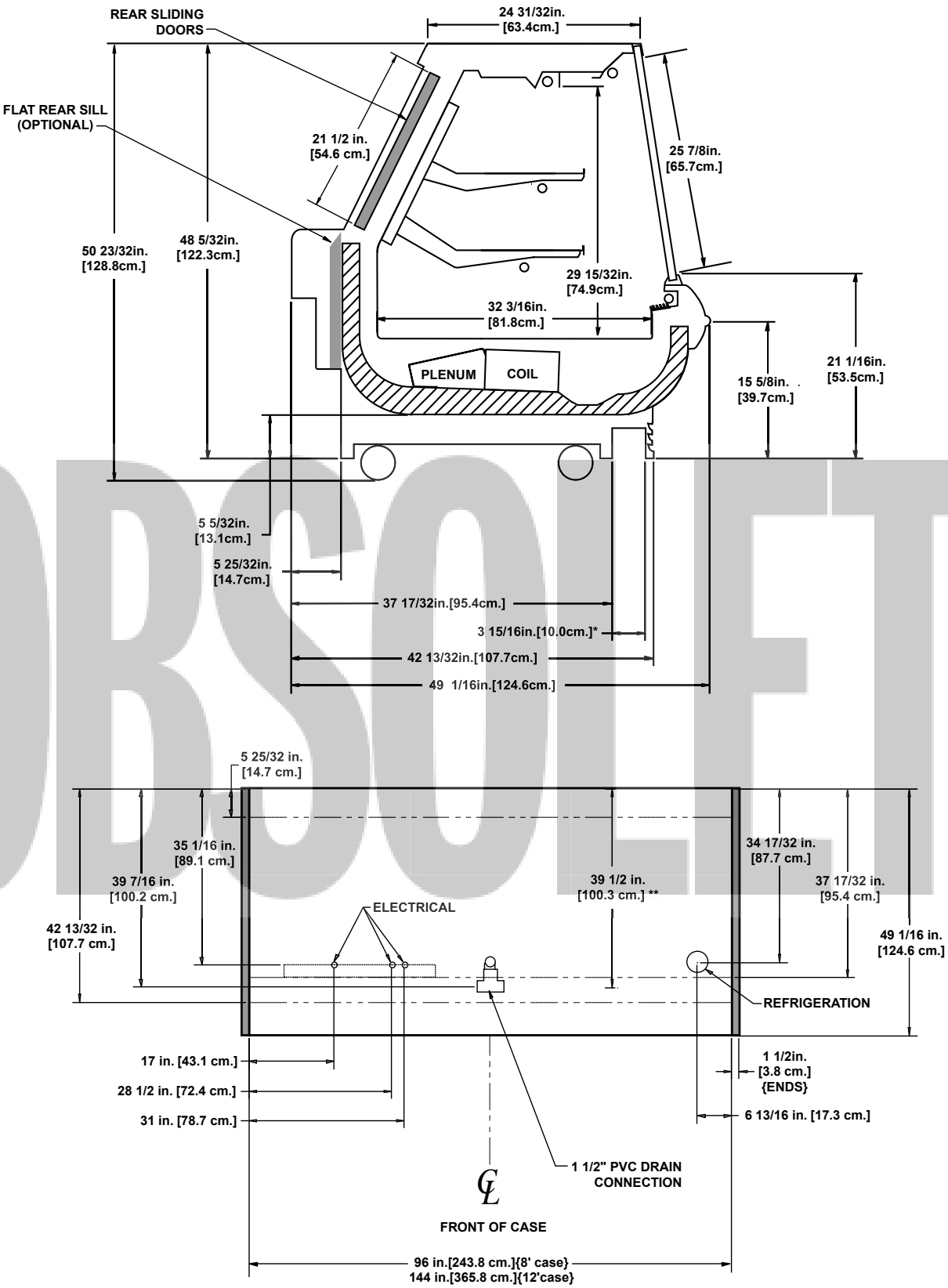

OBSOLETE

NOTES:

* STUB-UP AREA
** RECOMMENDED STUB-UP CENTERLINE FOR ELECTRICAL AND HUB DRAINS

• ENDS ADD APPROXIMATELY 1 INCH TO CASE HEIGHT

OBSOLETE

American Style Meat/Deli/Seafood Gravity Coil Merchandisers

OSAG - 4', 6', 8' & 12' american style full service, gravity coil

Electrical Data

Model		Fans per Case	Standard Fans 120 Volts Amps	Standard Fans 120 Volts Watts	High Efficiency Fans 120 Volts Amps	High Efficiency Fans 120 Volts Watts	Anti-Condensate Heaters[1] 120 Volts Amps	Anti-Condensate Heaters[1] 120 Volts Watts	Defrost Heaters 208 Volts Amps	Defrost Heaters 208 Volts Watts	Defrost Heaters 240 Volts Amps	Defrost Heaters 240 Volts Watts
OSAG	4'	2	0.68	34	0.30	22	0.17	20	- - -[1]	- - -	- - -	- - -
	6'	2	0.68	34	0.30	22	0.42	50	- - -	- - -	- - -	- - -
	8'	3	1.02	51	0.45	33	0.97	116	- - -	- - -	- - -	- - -
	12'	4	1.36	68	0.60	44	1.50	180	- - -	- - -	- - -	- - -

[1] NOTE: - - - not an option on this case model.

Lighting Data

Model		Typical per Light Row 120 Volts Amps	Typical per Light Row 120 Volts Watts	Maximum Lighting 120 Volts Amps	Maximum Lighting 120 Volts Watts
OSAG	4'	057	68	1.14	137
	6'	0.57	68	1.49	179
	8'	0.57	68	1.49	179
	12'	0.77	92	2.31	277

OBSOLETE

Guidelines & Control Settings

Model	BTUH/ft[2]	Evaporator (°F)	Discharge Air[3] (°F)	Average Product (°F)	Return Air (°F)	Discharge Air Velocity[4] (FPM)
OSAG[5]	270	12	21-31	37	38	125

[2] BTUH's/ft listed are for parallel operation. Conventional ratings may be approximated by multiplying listed rating by 1.04.

[3] Measured 1" below louver.

[4] Average discharge air velocity at peak of defrost.

[5] If the OSAG is piped to a suction header lower than 10°F an EPR with a suction stop solenoid is required. A liquid line solenoid alone does not allow the case to cycle properly. The thermostat probe should be located on the inlet of the top coil. The cut out point should be set to 12°F and the cut in point should be set so that refrigeration starts as soon as the coil ice starts to drip.

Defrost Controls

Model	Defrosts Per Day	Electric Defrost Fail-safe (min)	Electric Defrost Termination Temp. (°F)	Timed Off Defrost Fail-safe (min)	Timed Off Defrost Termination Temp. (°F)	Hot Gas Defrost Fail-safe (min)	Hot Gas Defrost Termination Temp. (°F)	Reverse Air Defrost Fail-safe (min)	Reverse Air Defrost Termination Temp. (°F)
OSAG	2	- - -	- - -	65	46	- - -	- - -	- - -	- - -

Medium Temperature Defrost Schedule

No. Per Day	Hours
1	12 midnight
2	12 am - 12 pm
3	6 am - 2 pm - 10 pm
4	12 - 6 am - 12 - 6 pm

All measurements are taken per CRMA specifications.

OSAG
(11" BASEFRAME)

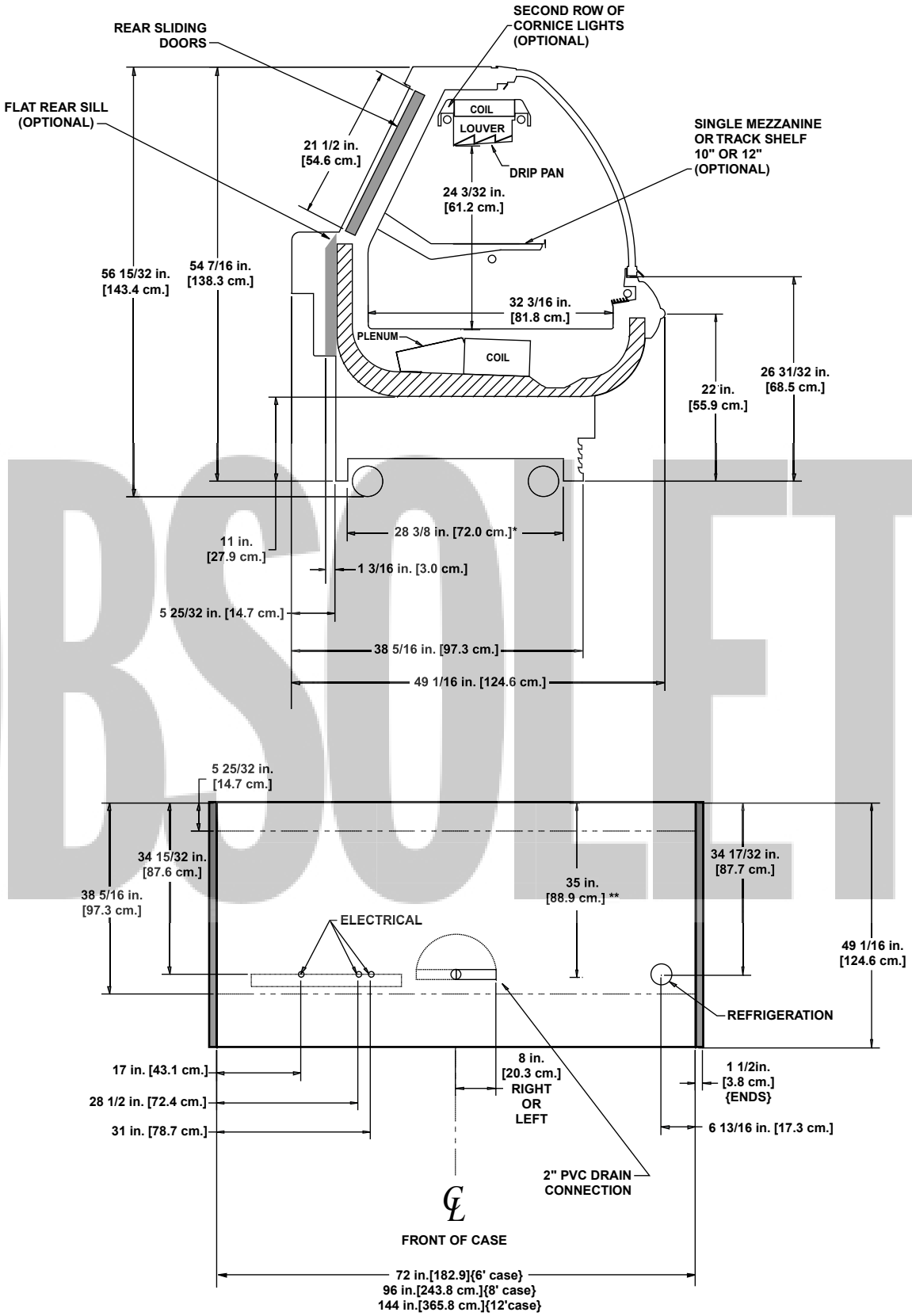

NOTES:

* STUB-UP AREA
** RECOMMENDED STUB-UP CENTERLINE FOR ELECTRICAL AND HUB DRAINS

- ENDS ADD APPROXIMATELY 1 INCH TO CASE HEIGHT
- SERPENTINE COIL AVAILABLE FOR FISH/SEAFOOD APPLICATION ONLY

OBSOLETE

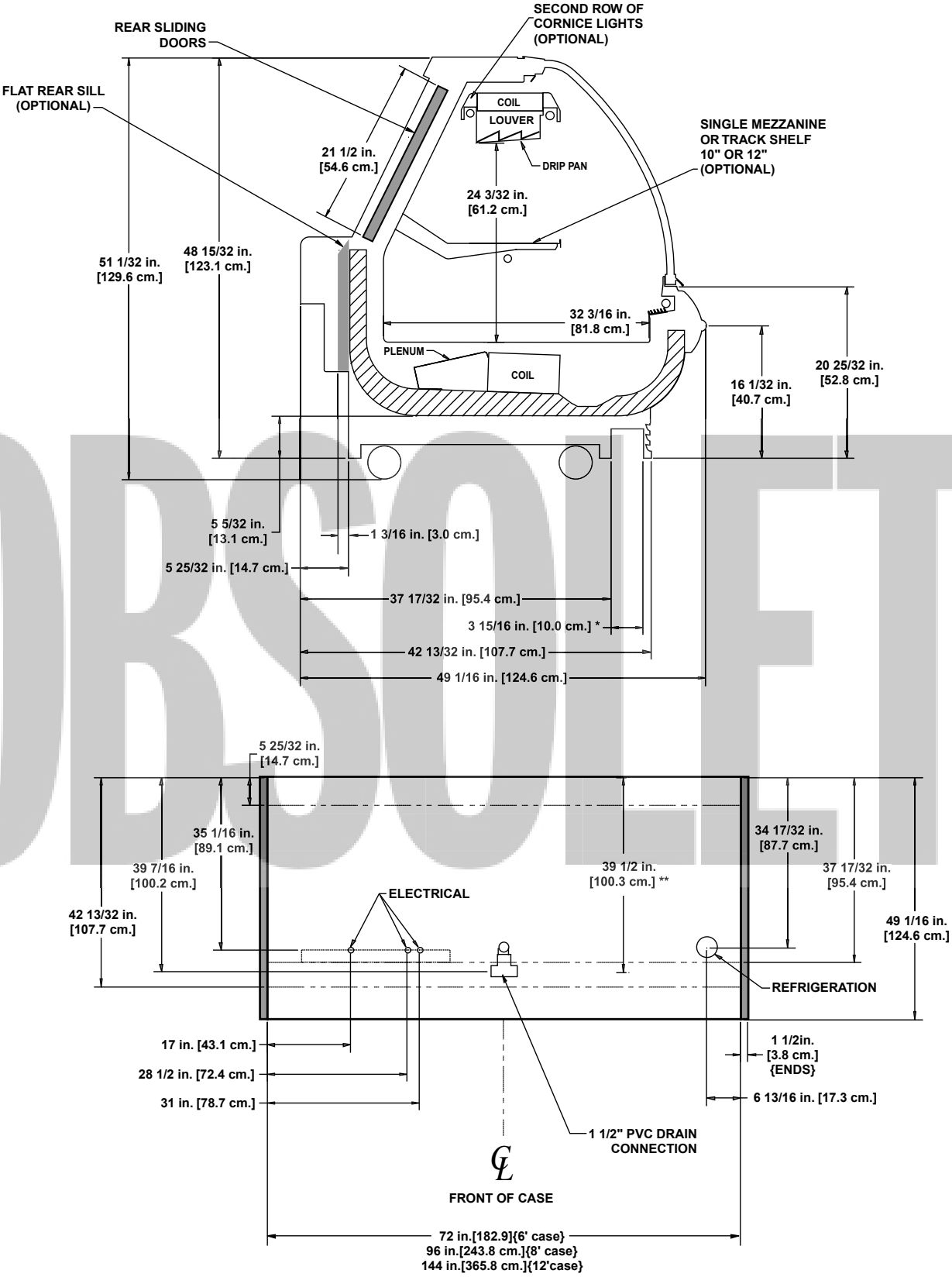

OBSOLETE

NOTES:

* STUB-UP AREA
** RECOMMENDED STUB-UP CENTERLINE FOR ELECTRICAL AND HUB DRAINS

- ENDS ADD APPROXIMATELY 1 INCH TO CASE HEIGHT
- SERPENTINE COIL AVAILABLE FOR FISH/SEAFOOD APPLICATION ONLY

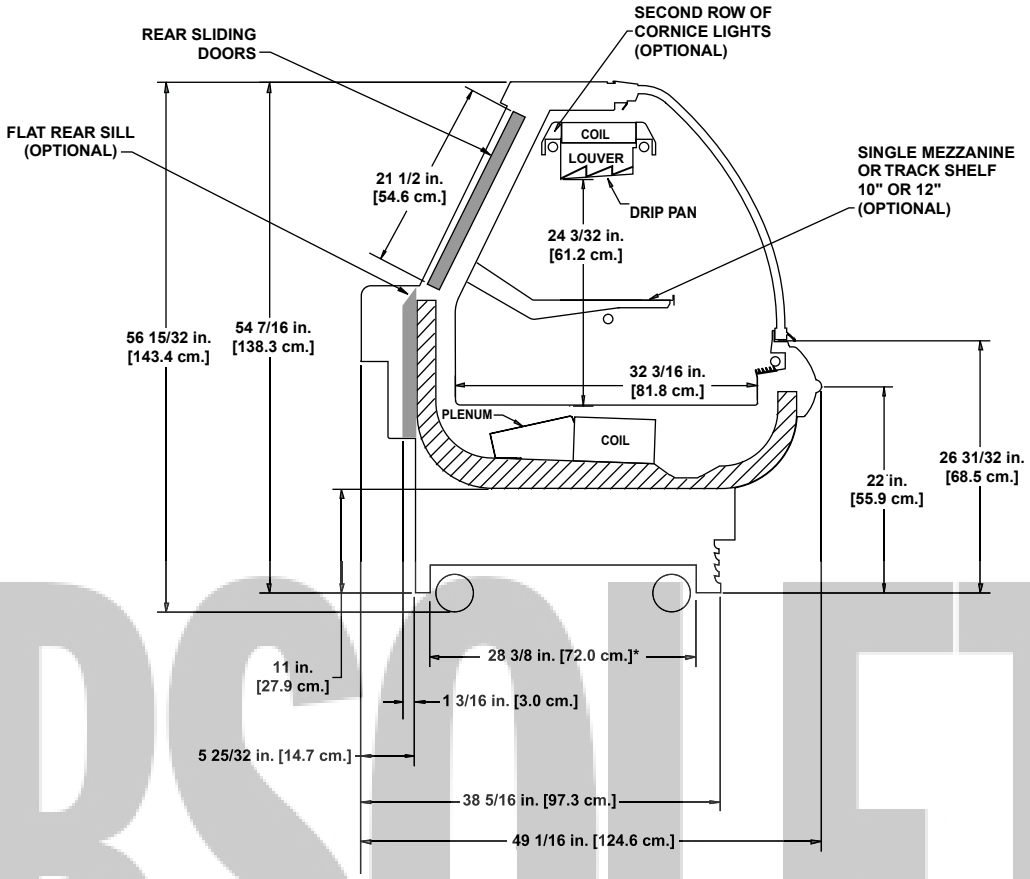

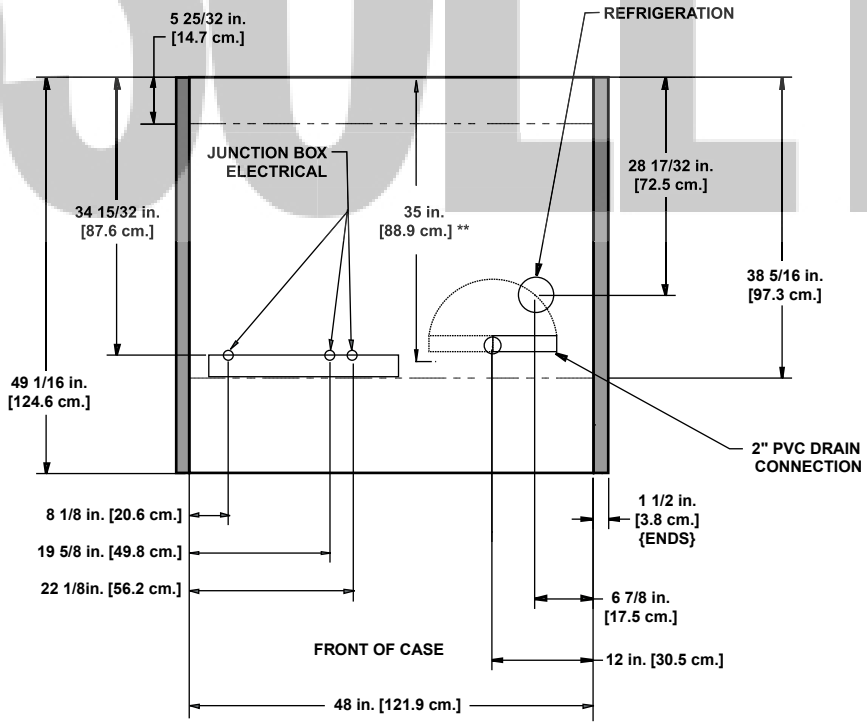

NOTES:

* STUB-UP AREA
** RECOMMENDED STUB-UP CENTERLINE FOR ELECTRICAL AND HUB DRAINS

• ENDS ADD APPROXIMATELY 1 INCH TO CASE HEIGHT

OBSOLETE

American Style Flat Glass Meat/Deli/Seafood Gravity Coil Merchandisers

OGM - 8' & 12' american style flat glass full service, gravity coil

Electrical Data

Model		Fans per Case	Standard Fans 120 Volts Amps	Standard Fans 120 Volts Watts	High Efficiency Fans 120 Volts Amps	High Efficiency Fans 120 Volts Watts	Anti-Condensate Heaters 120 Volts Amps	Anti-Condensate Heaters 120 Volts Watts	Defrost Heaters 208 Volts Amps	Defrost Heaters 208 Volts Watts	Defrost Heaters 240 Volts Amps	Defrost Heaters 240 Volts Watts
OGM	8'	0	- - -[1]	- - -	- - -	- - -	0.97	116	- - -	- - -	- - -	- - -
	12'	0	- - -	- - -	- - -	- - -	1.50	180	- - -	- - -	- - -	- - -

[1] NOTE: - - - not an option on this case model.

Lighting Data

Model		Typical per Light Row 120 Volts Amps	Typical per Light Row 120 Volts Watts	Maximum Lighting 120 Volts Amps	Maximum Lighting 120 Volts Watts
OGM	8'	0.57	68	2.06	247
	12'	0.77	92	3.08	370

OBSOLETE

Guidelines & Control Settings

Model	BTUH/ft[2]	Evaporator (°F)	Discharge Air (°F)	Average Product (°F)	Return Air (°F)	Discharge Air Velocity[4] (FPM)
OGM	226	17	NA[3]	35	NA	NA

[2] BTUH's/ft listed are for parallel operation. Conventional ratings may be approximated by multiplying listed rating by 1.04.

[3] Not applicable

[4] Average discharge air velocity at peak of defrost.

Defrost Controls

Model	Defrosts Per Day	Electric Defrost Fail-safe (min)	Electric Defrost Termination Temp. (°F)	Timed Off Defrost Fail-safe (min)	Timed Off Defrost Termination Temp. (°F)	Hot Gas Defrost Fail-safe (min)	Hot Gas Defrost Termination Temp. (°F)	Reverse Air Defrost Fail-safe (min)	Reverse Air Defrost Termination Temp. (°F)
OGM	2	- - -	- - -	65	46	- - -	- - -	- - -	- - -

Medium Temperature Defrost Schedule

No. Per Day	Hours
1	12 midnight
2	12 am - 12 pm
3	6 am - 2 pm - 10 pm
4	12 - 6 am - 12 - 6 pm

Hill PHOENIX™ EXCELLENCE

A DOVER DIVERSIFIED COMPANY

All measurements are taken per CRMA specifications.

OGM
(11" BASEFRAME)

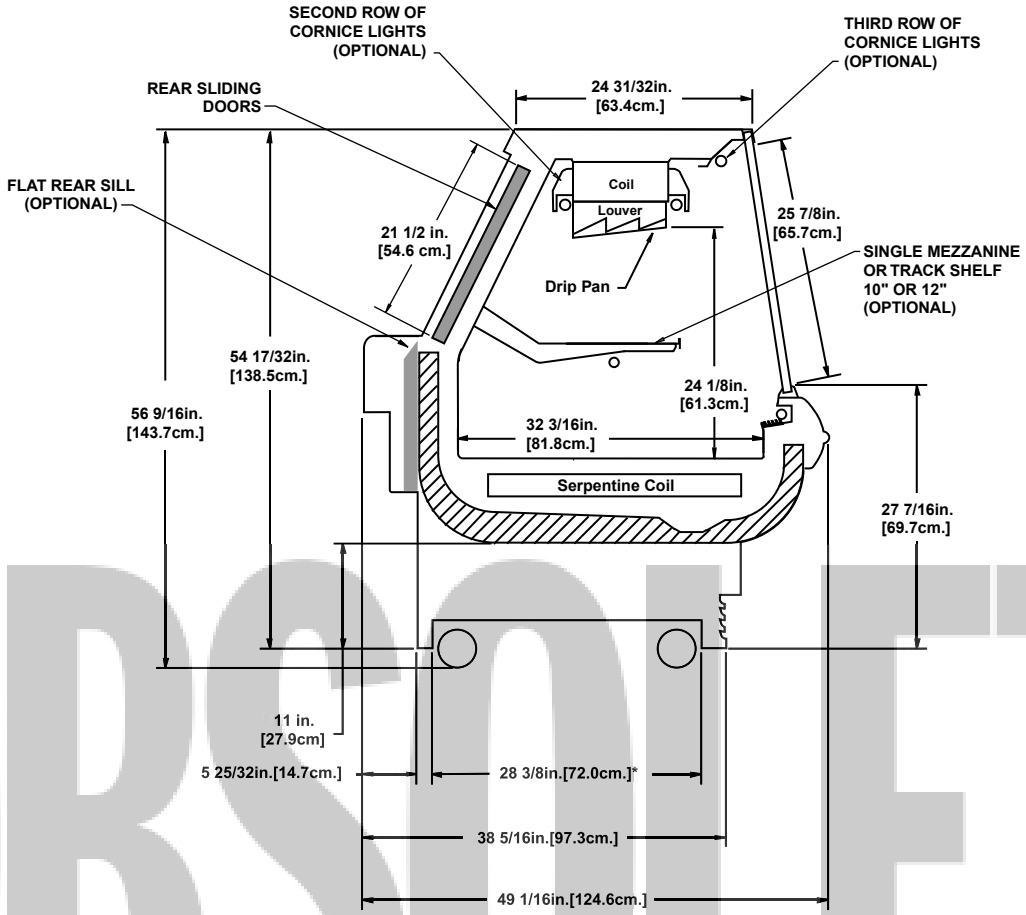

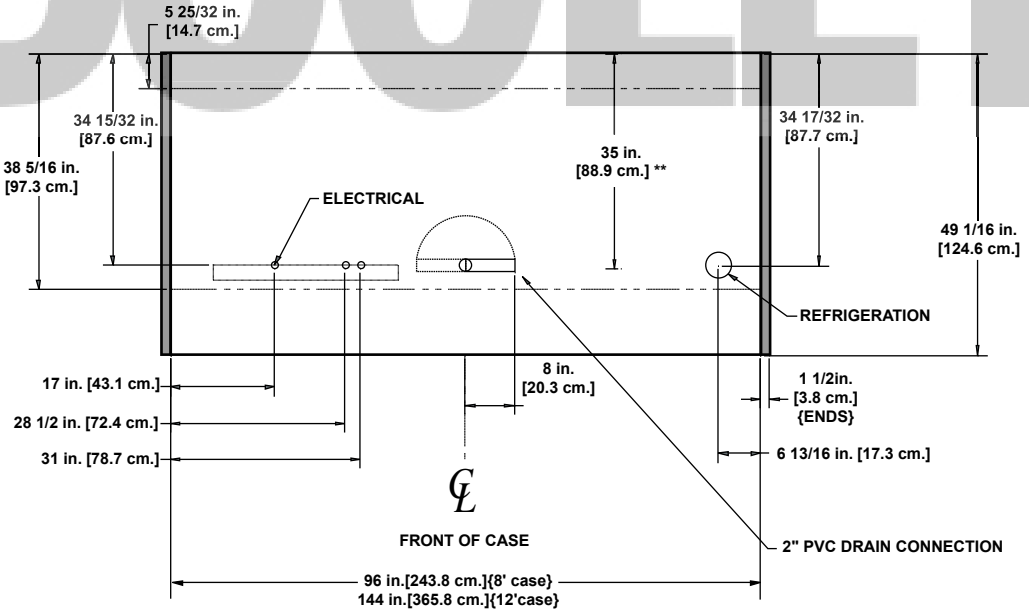

NOTES:

* STUB-UP AREA
** RECOMMENDED STUB-UP CENTERLINE FOR ELECTRICAL AND HUB DRAINS

• ENDS ADD APPROXIMATELY 1 INCH TO CASE HEIGHT

OBSOLETE

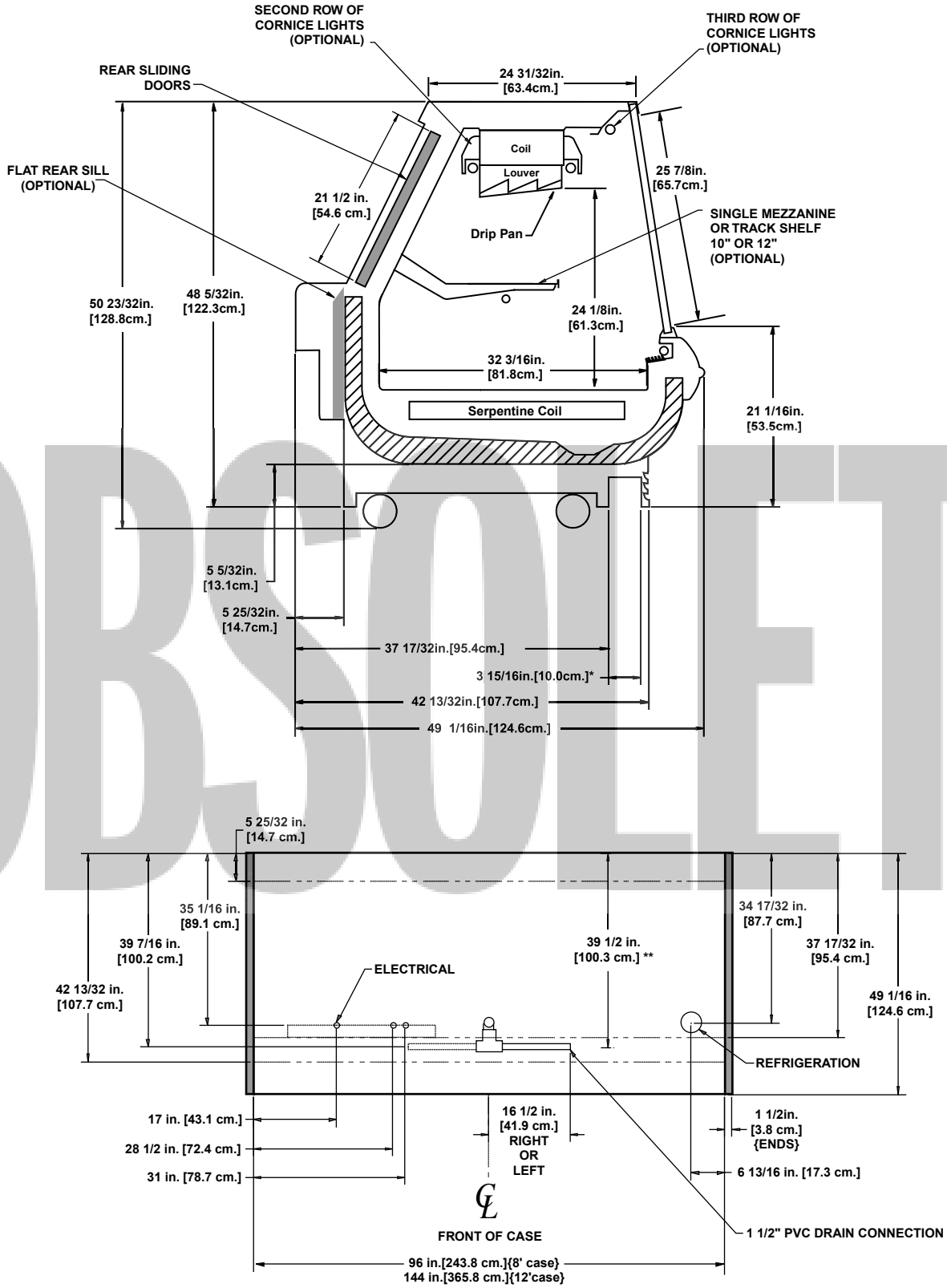

OBSOLETE

NOTES:

* STUB-UP AREA
** RECOMMENDED STUB-UP CENTERLINE FOR ELECTRICAL AND HUB DRAINS

• ENDS ADD APPROXIMATELY 1 INCH TO CASE HEIGHT

OBSOLETE

International Style Meat/Deli/Seafood Merchandisers

OSI - 4', 6', 8', & 12' international style full service

Electrical Data

Model		Fans per Case	Standard Fans 120 Volts Amps	Standard Fans 120 Volts Watts	High Efficiency Fans 120 Volts Amps	High Efficiency Fans 120 Volts Watts	Anti-Condensate Heaters 120 Volts Amps	Anti-Condensate Heaters 120 Volts Watts	Defrost Heaters 208 Volts Amps	Defrost Heaters 208 Volts Watts	Defrost Heaters 240 Volts Amps	Defrost Heaters 240 Volts Watts
OSI	4'	2	0.68	34	0.30	22	0.55	66	1.92	400	2.22	532
	6'	2	0.68	34	0.30	22	1.03	124	2.88	600	3.33	798
	8'	3	1.02	51	0.45	33	1.22	146	3.85	800	4.44	1065
	12'	4	1.36	68	0.60	44	1.88	226	5.77	1200	6.67	1600

Lighting Data

Model		Typical per Light Row 120 Volts Amps	Typical per Light Row 120 Volts Watts	Maximum Lighting 120 Volts Amps	Maximum Lighting 120 Volts Watts
OSI	4'	0.57	68	1.14	137
	6'	0.57	68	1.43	172
	8'	0.57	68	1.49	179
	12'	0.77	92	2.31	277

OBSOLETE

Guidelines & Control Settings

Model	BTUH/ft[1]	Evaporator (°F)	Discharge Air (°F)	Average Product (°F)	Return Air (°F)	Discharge Air Velocity[2] (FPM)
OSI[3]	350	22	31	36	38	175

[1] BTUH's/ft listed are for parallel operation. Conventional ratings may be approximated by multiplying listed rating by 1.04.

[2] Average discharge air velocity at peak of defrost.

[3] Humidification system required on this case when used for Fresh Meat application

Defrost Controls

Model	Defrosts Per Day	Electric Defrost Fail-safe (min)	Electric Defrost Termination Temp. (°F)	Timed Off Defrost[4] Fail-safe (min)	Timed Off Defrost[4] Termination Temp. (°F)	Hot Gas Defrost Fail-safe (min)	Hot Gas Defrost Termination Temp. (°F)	Reverse Air Defrost Fail-safe (min)	Reverse Air Defrost Termination Temp. (°F)
OSI	3	30	60	70	60	- - -[5]	- - -	- - -	- - -

[4] Not recommended on this model due to long defrost time.

[5] NOTE: - - - not an option on this case model.

Medium Temperature Defrost Schedule

No. Per Day	Hours
1	12 midnight
2	12 am - 12 pm
3	6 am - 2 pm - 10 pm
4	12 - 6 am - 12 - 6 pm

All measurements are taken per CRMA specifications.

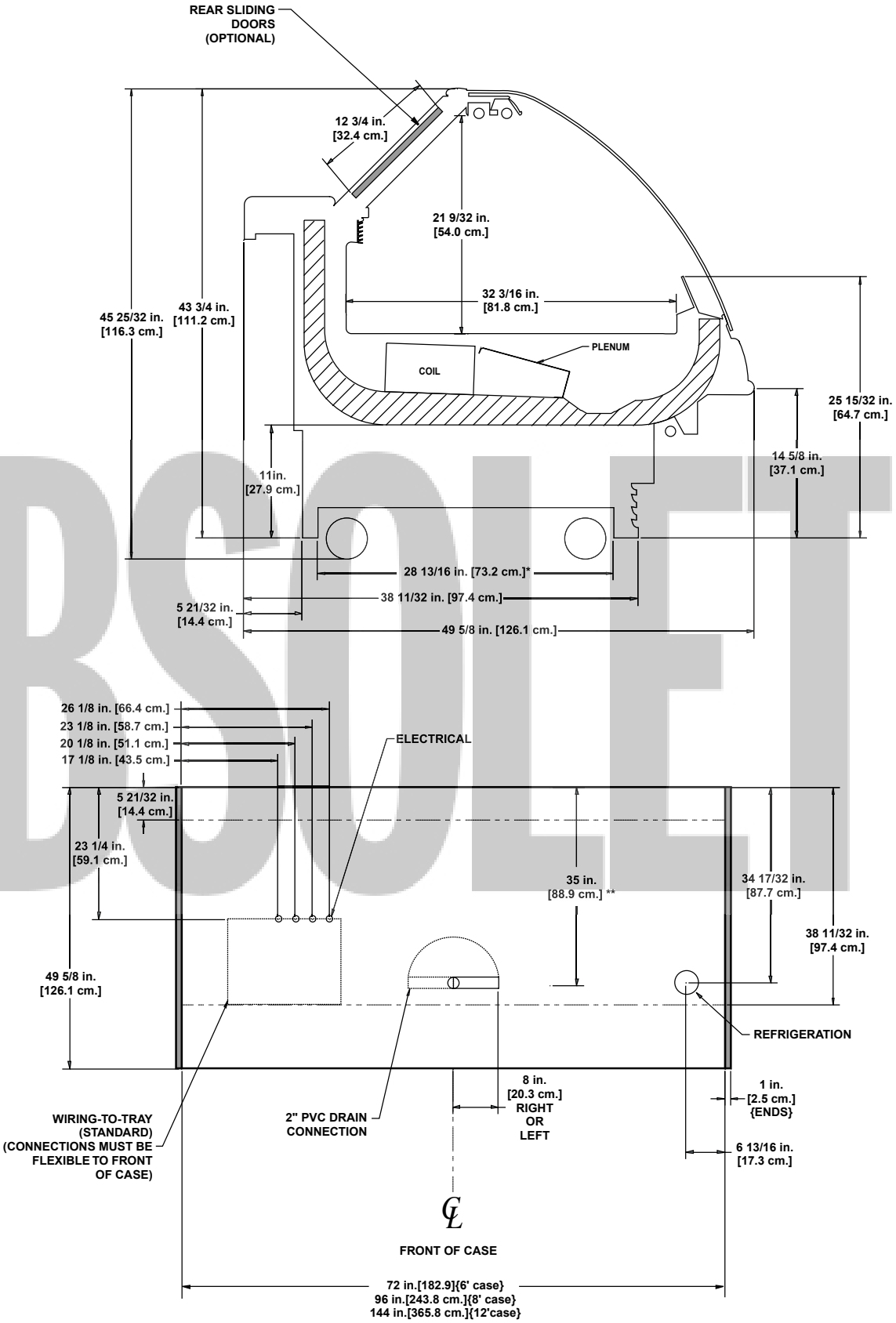

NOTES:

* STUB-UP AREA
** RECOMMENDED STUB-UP CENTERLINE FOR ELECTRICAL AND HUB DRAINS

• ENDS ADD APPROXIMATELY 1 INCH TO CASE HEIGHT

OBSOLETE

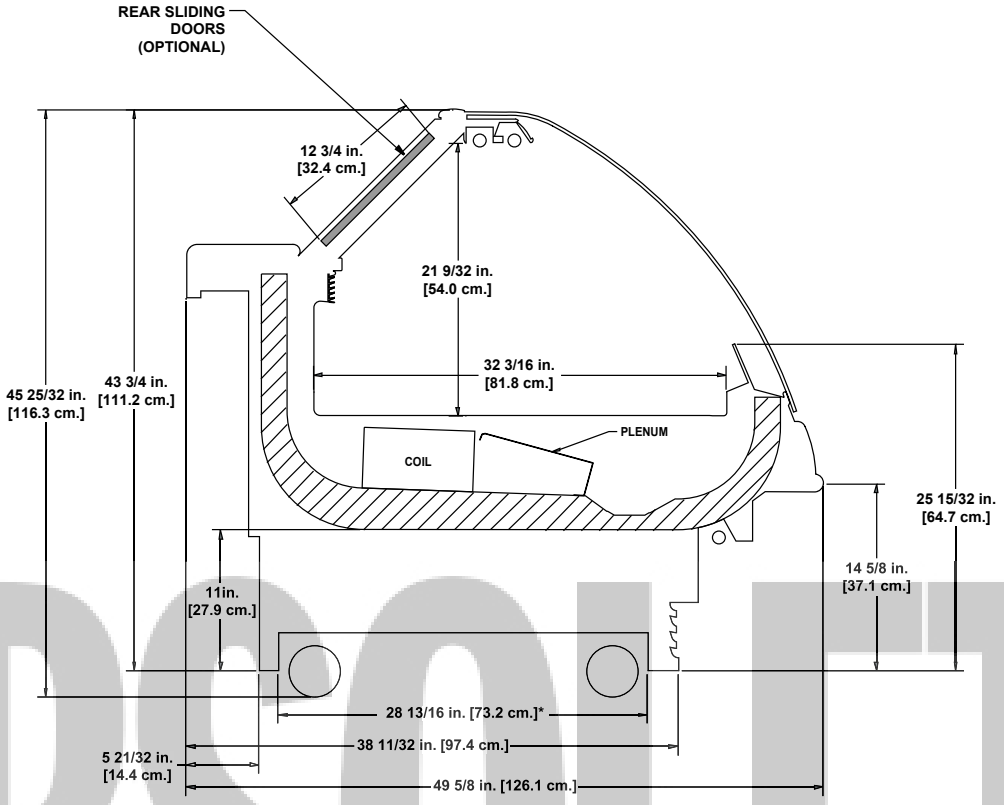

OBSOLETE

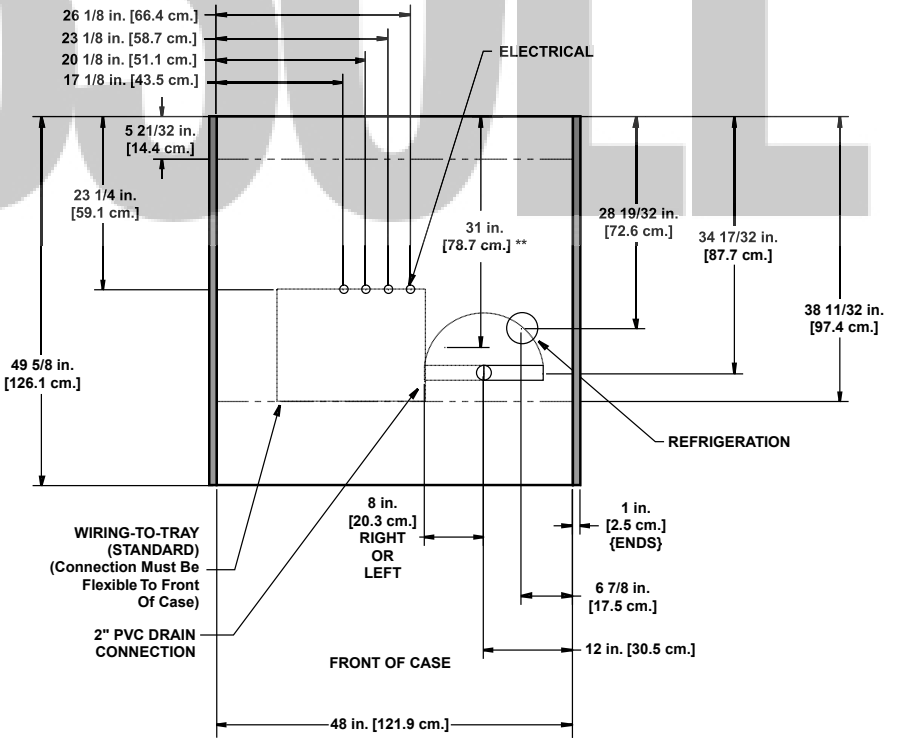

NOTES:

* STUB-UP AREA
** RECOMMENDED STUB-UP CENTERLINE FOR ELECTRICAL AND HUB DRAINS

• ENDS ADD APPROXIMATELY 1 INCH TO CASE HEIGHT

OBSOLETE

Wide International Style Meat/Deli/Seafood Merchandisers

OWSI - 6', 8', & 12' international style full service

Electrical Data

Model		Fans per Case	Standard Fans 120 Volts Amps	Standard Fans 120 Volts Watts	High Efficiency Fans 120 Volts Amps	High Efficiency Fans 120 Volts Watts	Anti-Condensate Heaters 120 Volts Amps	Anti-Condensate Heaters 120 Volts Watts	Defrost Heaters 208 Volts Amps	Defrost Heaters 208 Volts Watts	Defrost Heaters 240 Volts Amps	Defrost Heaters 240 Volts Watts
OWSI	6'	2	0.68	34	0.30	22	1.03	124	2.88	600	3.33	798
	8'	3	1.02	51	0.45	33	1.22	146	3.85	800	4.44	1065
	12'	4	1.36	68	0.60	44	1.88	226	5.77	1200	6.67	1600

Lighting Data

Model		Typical per Light Row 120 Volts Amps	Typical per Light Row 120 Volts Watts	Maximum Lighting 120 Volts Amps	Maximum Lighting 120 Volts Watts
OWSI	6'	0.57	68	1.43	172
	8'	0.57	68	1.49	179
	12'	0.77	92	2.31	277

OBSOLETE

Guidelines & Control Settings

Model	BTUH/ft[1]	Evaporator (°F)	Discharge Air (°F)	Average Product (°F)	Return Air (°F)	Discharge Air Velocity[2] (FPM)
OWSI[3]	450	22	31	36	38	175

[1] BTUH's/ft listed are for parallel operation. Conventional ratings may be approximated by multiplying listed rating by 1.04.

[2] Average discharge air velocity at peak of defrost.

[3] Humidification system required on this case when used for Fresh Meat application

Defrost Controls

Model	Defrosts Per Day	Electric Defrost Fail-safe (min)	Electric Defrost Termination Temp. (°F)	Timed Off Defrost[4] Fail-safe (min)	Timed Off Defrost[4] Termination Temp. (°F)	Hot Gas Defrost Fail-safe (min)	Hot Gas Defrost Termination Temp. (°F)	Reverse Air Defrost Fail-safe (min)	Reverse Air Defrost Termination Temp. (°F)
OWSI	3	30	60	70	60	- - -[5]	- - -	- - -	- - -

[4] Not recommended on this model due to long defrost time.

[5] NOTE: - - - not an option on this case model.

Medium Temperature Defrost Schedule

No. Per Day	Hours
1	12 midnight
2	12 am - 12 pm
3	6 am - 2 pm - 10 pm
4	12 - 6 am - 12 - 6 pm

All measurements are taken per CRMA specifications.

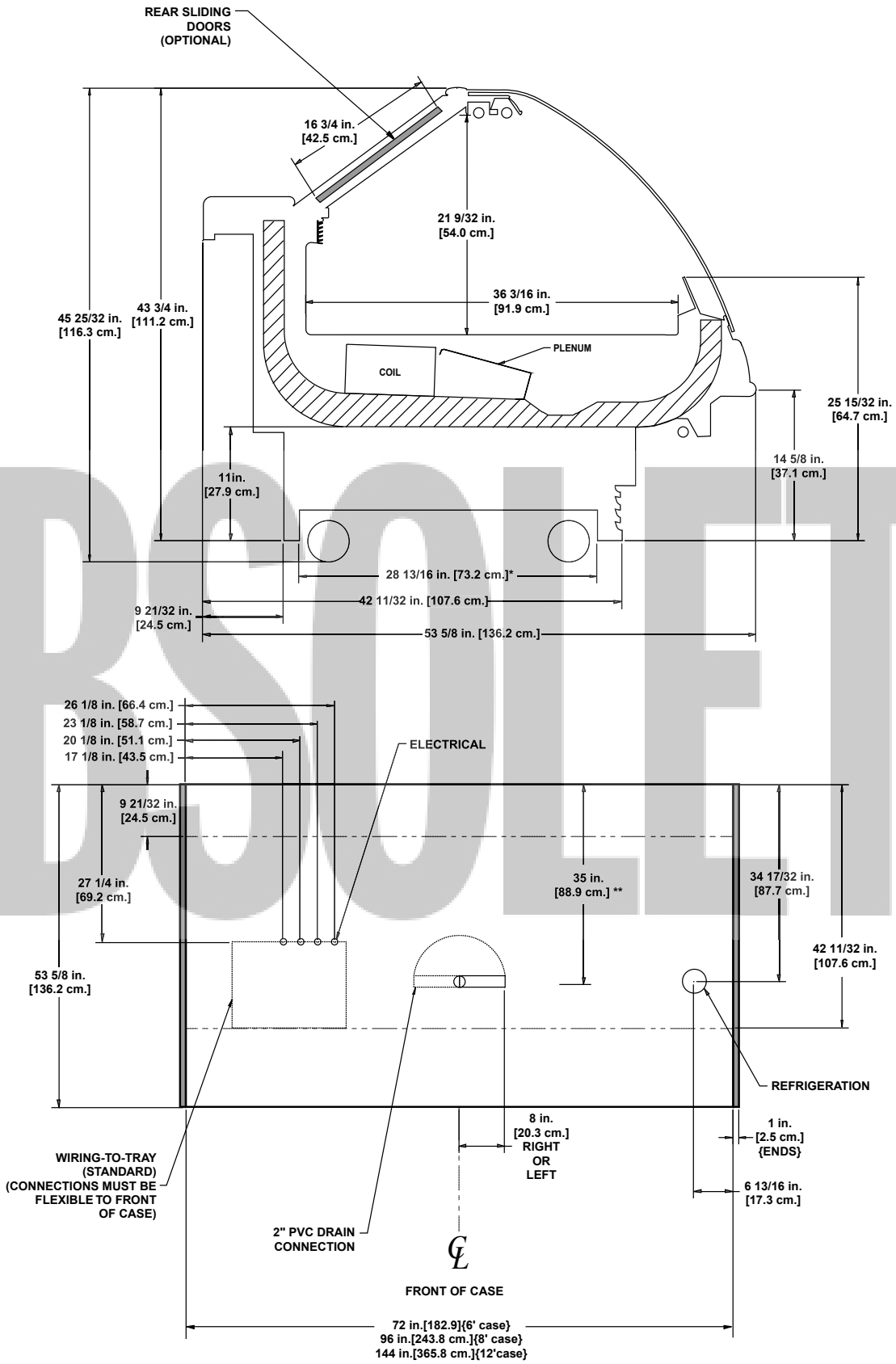

NOTES:

* STUB-UP AREA
** RECOMMENDED STUB-UP CENTERLINE FOR ELECTRICAL AND HUB DRAINS

• ENDS ADD APPROXIMATELY 1 INCH TO CASE HEIGHT

OBSOLETE

International Style Flat Glass Meat/Deli/Seafood Merchandisers

OSIF - 4', 6', 8', & 12' international style full service

Electrical Data

Model		Fans per Case	Standard Fans 120 Volts Amps	Standard Fans 120 Volts Watts	High Efficiency Fans 120 Volts Amps	High Efficiency Fans 120 Volts Watts	Anti-Condensate Heaters 120 Volts Amps	Anti-Condensate Heaters 120 Volts Watts	Defrost Heaters 208 Volts Amps	Defrost Heaters 208 Volts Watts	Defrost Heaters 240 Volts Amps	Defrost Heaters 240 Volts Watts
OSIF	4'	2	0.68	34	0.30	22	0.55	66	1.92	400	2.22	532
	6'	2	0.68	34	0.30	22	1.03	124	2.88	600	3.33	798
	8'	3	1.02	51	0.45	33	1.22	146	3.85	800	4.44	1065
	12'	4	1.36	68	0.60	44	1.88	226	5.77	1200	6.67	1600

Lighting Data

Model		Typical per Light Row 120 Volts Amps	Typical per Light Row 120 Volts Watts	Maximum Lighting 120 Volts Amps	Maximum Lighting 120 Volts Watts
OSIF	4'	0.57	68	1.14	137
	6'	0.57	68	1.43	172
	8'	0.57	68	1.49	179
	12'	0.77	92	2.31	277

OBSOLETE

Guidelines & Control Settings

Model	BTUH/ft[1]	Evaporator (°F)	Discharge Air (°F)	Average Product (°F)	Return Air (°F)	Discharge Air Velocity[2] (FPM)
OSIF[3]	350	22	31	36	38	175

[1] BTUH's/ft listed are for parallel operation. Conventional ratings may be approximated by multiplying listed rating by 1.04.

[2] Average discharge air velocity at peak of defrost.

[3] Humidification system required on this case when used for Fresh Meat application

Defrost Controls

Model	Defrosts Per Day	Electric Defrost Fail-safe (min)	Electric Defrost Termination Temp. (°F)	Timed Off Defrost[4] Fail-safe (min)	Timed Off Defrost[4] Termination Temp. (°F)	Hot Gas Defrost Fail-safe (min)	Hot Gas Defrost Termination Temp. (°F)	Reverse Air Defrost Fail-safe (min)	Reverse Air Defrost Termination Temp. (°F)
OSIF	3	30	60	70	60	- - -[5]	- - -	- - -	- - -

[4] Not recommended on this model due to long defrost time.

[5] NOTE: - - - not an option on this case model.

Medium Temperature Defrost Schedule

No. Per Day	Hours
1	12 midnight
2	12 am - 12 pm
3	6 am - 2 pm - 10 pm
4	12 - 6 am - 12 - 6 pm

All measurements are taken per CRMA specifications.

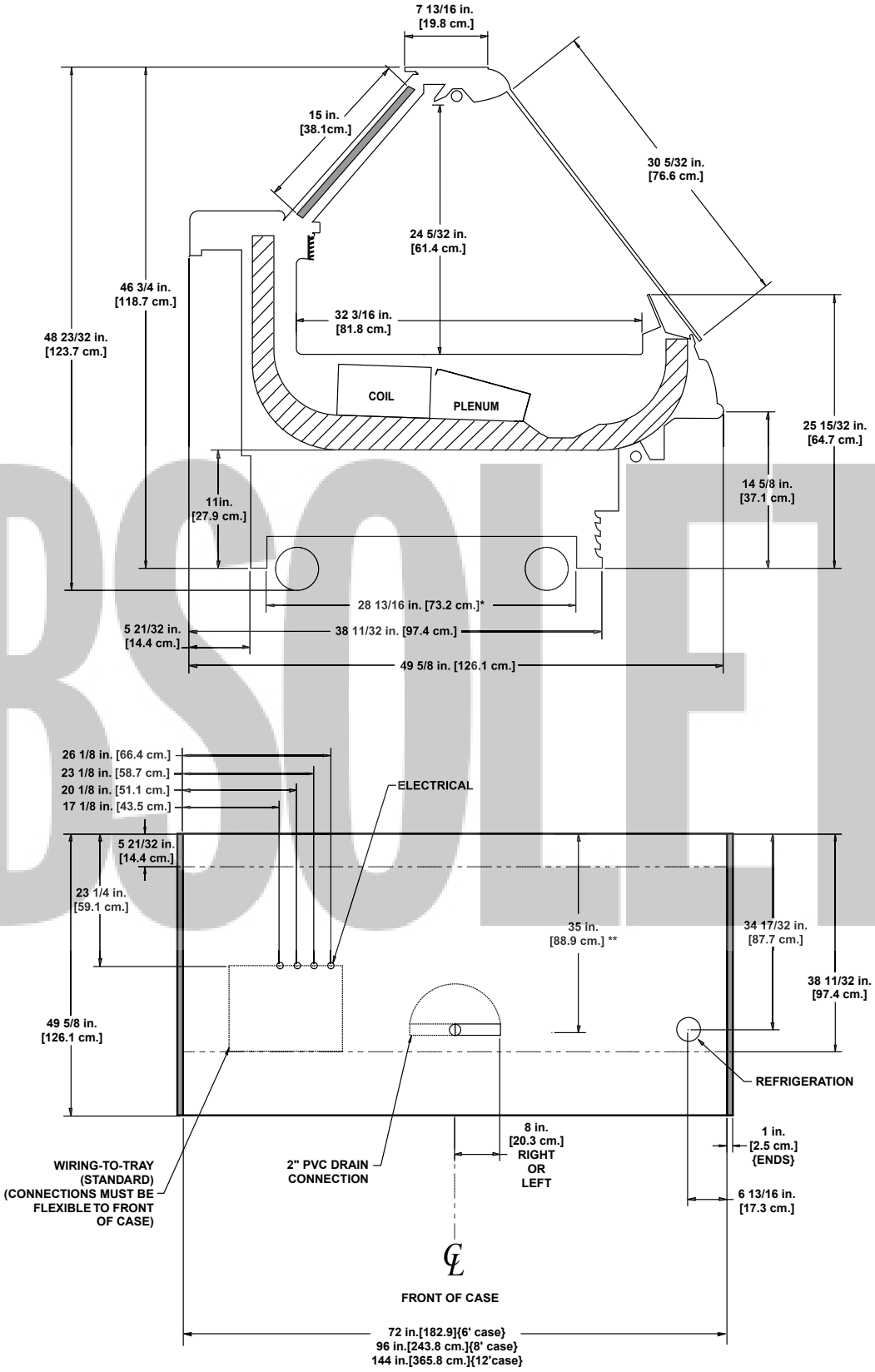

NOTES:

* STUB-UP AREA
** RECOMMENDED STUB-UP CENTERLINE FOR ELECTRICAL AND HUB DRAINS

• ENDS ADD APPROXIMATELY 1 INCH TO CASE HEIGHT

OBSOLETE

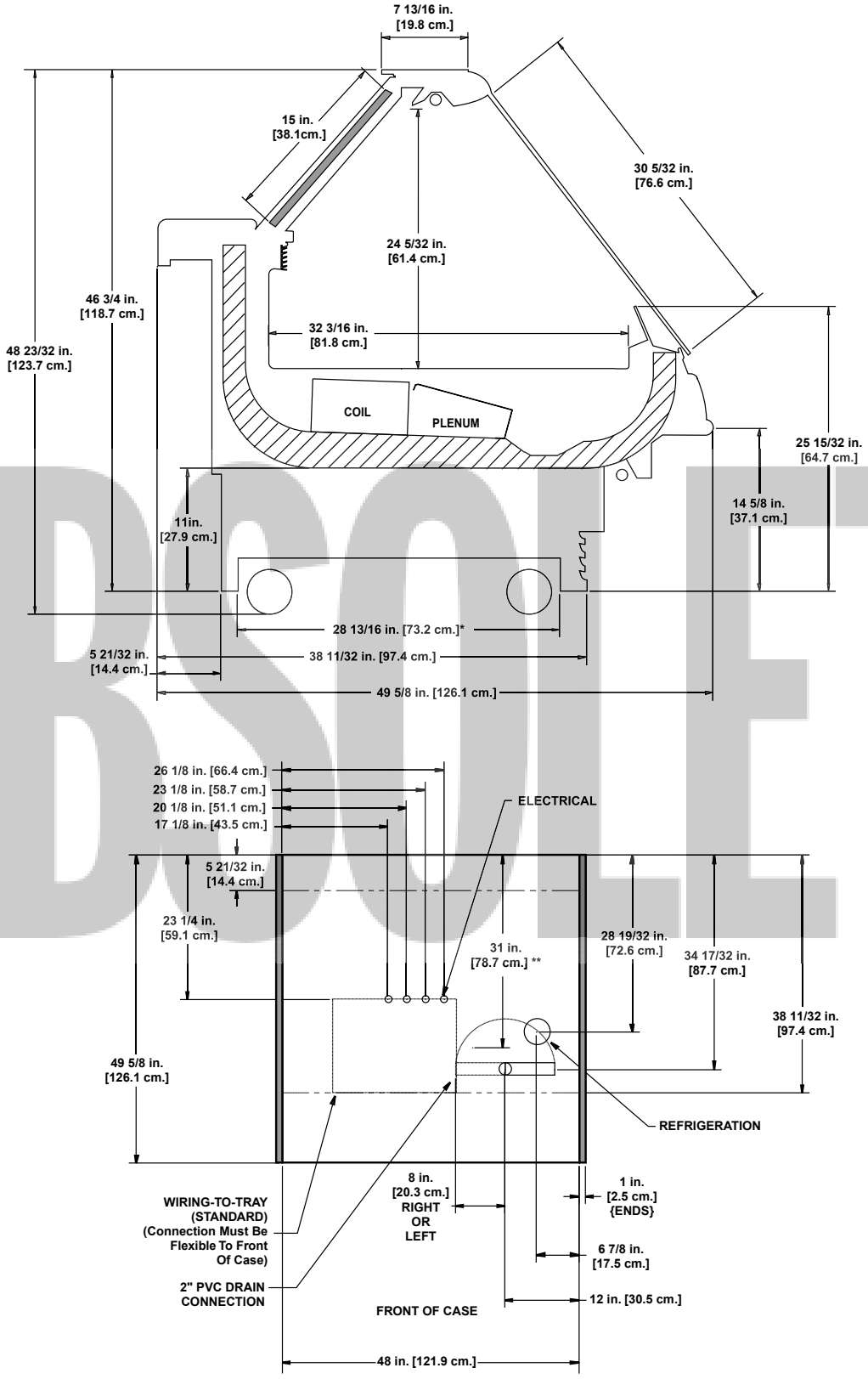

OBSOLETE

NOTES:

* STUB-UP AREA
** RECOMMENDED STUB-UP CENTERLINE FOR ELECTRICAL AND HUB DRAINS

• ENDS ADD APPROXIMATELY 1 INCH TO CASE HEIGHT

OBSOLETE

Flat Glass Service Deli Merchandisers

OLF - 4', 8', & 12' flat glass full service

Electrical Data

Model		Fans per Case		Ambient Fans[1]		Standard Fans		High Efficiency Fans		Anti-Condensate Heaters		Defrost Heaters			
				120 Volts		120 Volts		120 Volts		120 Volts		208 Volts		220 Volts	
		Pri.	Amb.	Amps	Watts	Amps	Watts	Amps	Watts	Amps	Watts	Amps	Watts	Amps	Watts
OLF	4'	2	2	0.30	11	0.90	34	0.30	22	0.38	47	1.92	400	2.22	532
	8'	3	4	0.60	22	1.35	51	0.45	33	0.97	116	3.85	800	4.44	1065
	12'	4	6	0.90	33	1.80	68	0.60	44	1.49	179	5.78	1200	6.67	1600

[1] Ambient fans are standard equipment for this case model. The primary fans can either be standard or high efficiency.

Lighting Data

Model		Typical per Light Row		Maximum Lighting	
		120 Volts		120 Volts	
		Amps	Watts	Amps	Watts
OLF	4'	0.57	68	1.49	179
	8'	0.57	68	2.41	289
	12'	0.77	92	3.85	462

OBSOLETE

Guidelines & Control Settings

Model	BTUH/ft[2]	Evaporator (°F)	Discharge Air (°F)	Average Product (°F)	Return Air (°F)	Discharge Air Velocity[3] (FPM)
OLF	431	17	27	33	34	363

[2] BTUH's/ft listed are for parallel operation. Conventional ratings may be approximated by multiplying listed rating by 1.04.

[3] Average discharge air velocity at peak of defrost.

Defrost Controls

Model	Defrosts Per Day	Electric Defrost		Timed Off Defrost[4]		Hot Gas Defrost		Reverse Air Defrost	
		Fail-safe (min)	Termination Temp. (°F)	Fail-safe (min)	Termination Temp. (°F)	Fail-safe (min)	Termination Temp. (°F)	Fail-safe (min)	Termination Temp. (°F)
OLF	2	35	47	50	47	- - -[5]	- - -	- - -	- - -

[4] Not recommended on this model due to long defrost time.

[5] NOTE: - - - not an option on this case model.

Medium Temperature Defrost Schedule

No. Per Day	Hours
1	12 midnight
2	12 am - 12 pm
3	6 am - 2 pm - 10 pm
4	12 - 6 am - 12 - 6 pm

All measurements are taken per CRMA specifications.

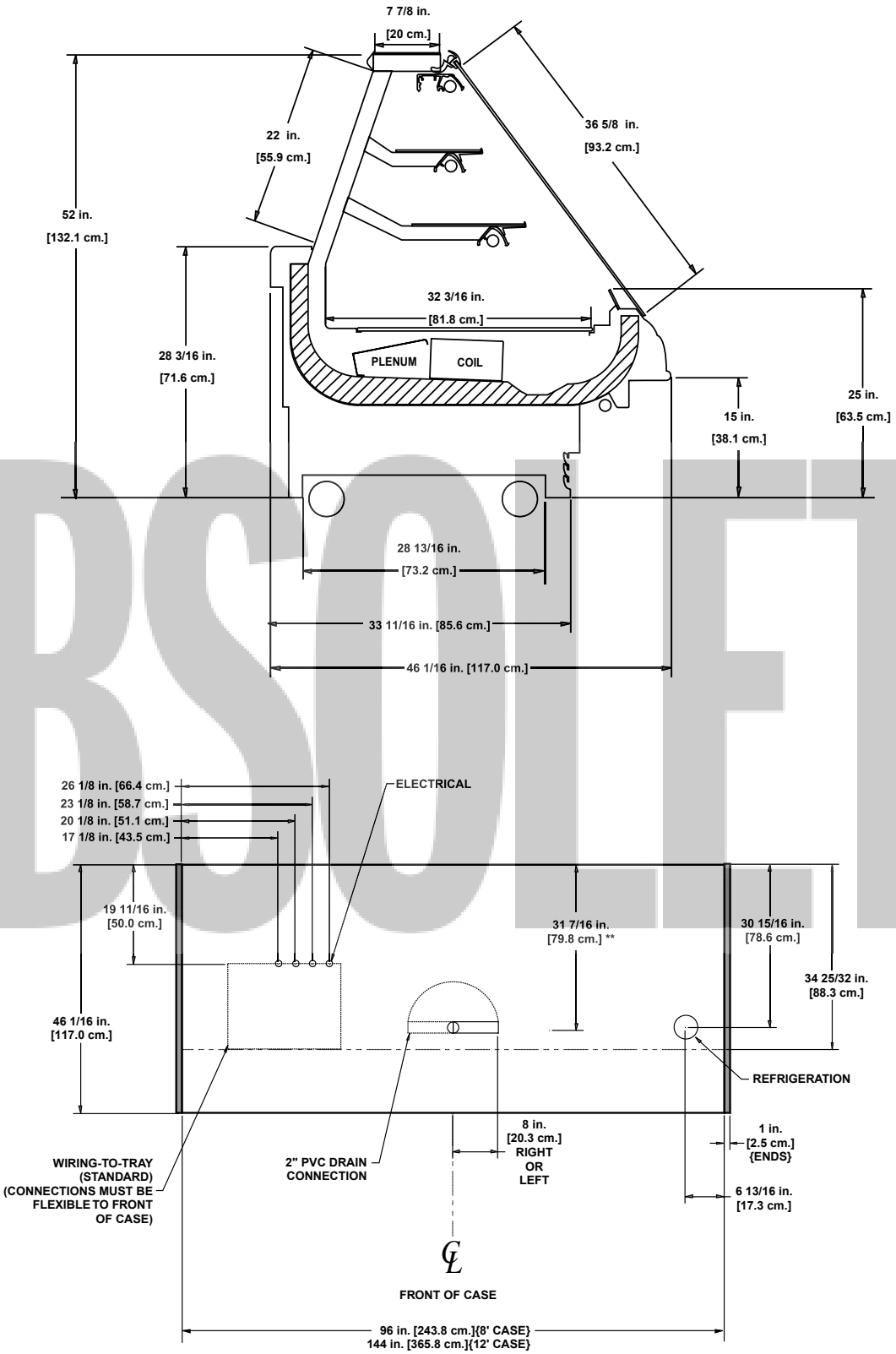

NOTES:

* STUB-UP AREA
** RECOMMENDED STUB-UP CENTERLINE FOR ELECTRICAL AND HUB DRAINS

• ENDS ADD APPROXIMATELY 1 INCH TO CASE HEIGHT

OBSOLETE

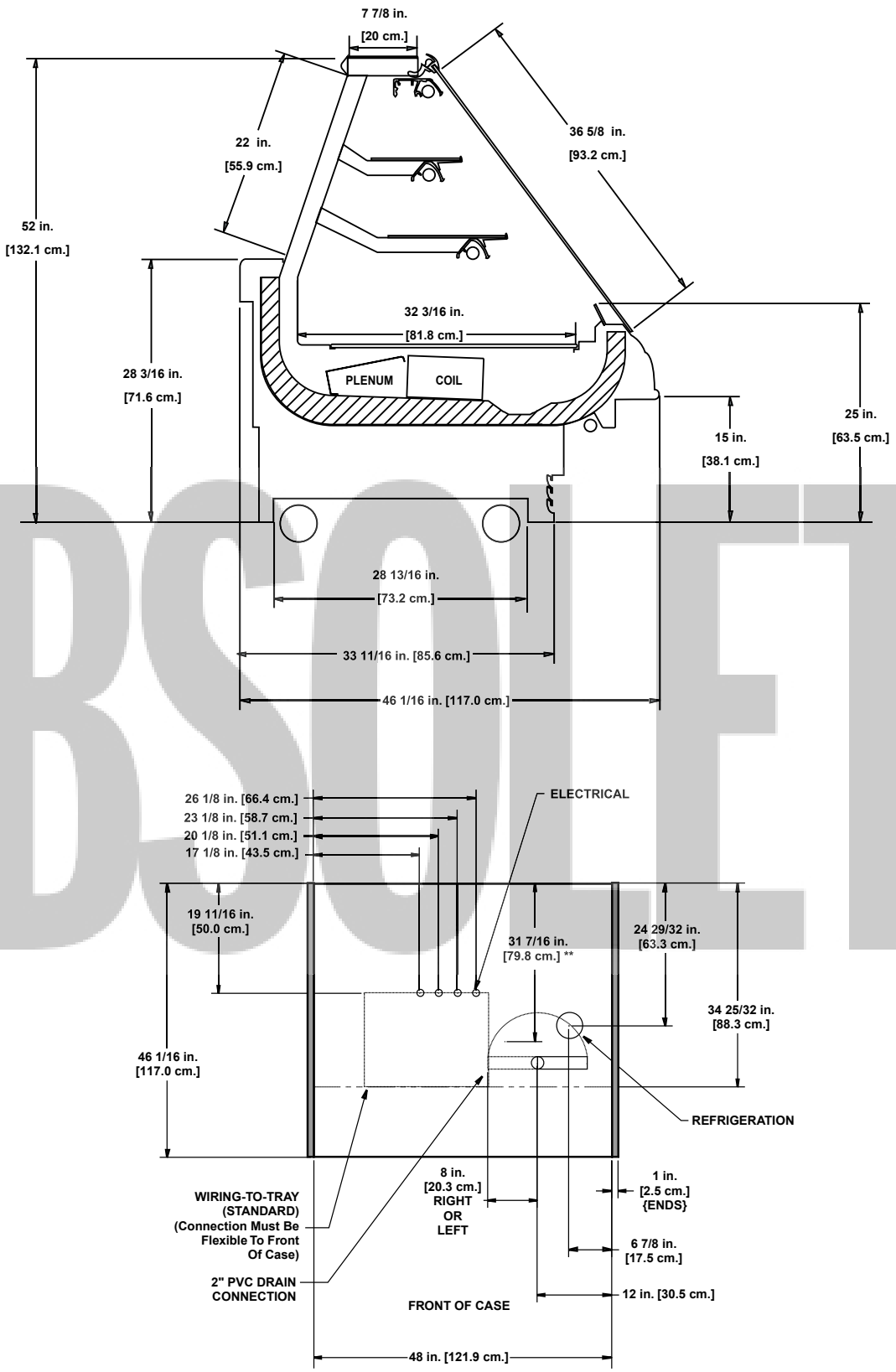

OBSOLETE

NOTES:

* STUB-UP AREA
** RECOMMENDED STUB-UP CENTERLINE FOR ELECTRICAL AND HUB DRAINS

• ENDS ADD APPROXIMATELY 1 INCH TO CASE HEIGHT

OBSOLETE

Flat Glass Gravity Service Deli Merchandisers

OLFG - 4', 8', & 12' flat glass gravity full service

Electrical Data

Model		Fans per Case		Ambient Fans[1]		Standard Fans		High Efficiency Fans		Anti-Condensate Heaters		Defrost Heaters			
				120 Volts		120 Volts		120 Volts		120 Volts		208 Volts		220 Volts	
		Pri.	Amb.	Amps	Watts	Amps	Watts	Amps	Watts	Amps	Watts	Amps	Watts	Amps	Watts
OLFG	4'	2	2	0.30	11	0.90	34	0.30	22	0.38	47	1.92	400	2.22	532
	8'	3	4	0.60	22	1.35	51	0.45	33	0.97	116	3.85	800	4.44	1065
	12'	4	6	0.90	33	1.80	68	0.60	44	1.49	179	5.78	1200	6.67	1600

[1] Ambient fans are standard equipment for this case model. The primary fans can either be standard or high efficiency.

Lighting Data

Model		Typical per Light Row		Maximum Lighting	
		120 Volts		120 Volts	
		Amps	Watts	Amps	Watts
OLFG	4'	0.57	68	2.06	247
	8'	0.57	68	2.98	358
	12'	0.77	92	4.62	554

OBSOLETE

Guidelines & Control Settings

Model	BTUH/ft^2	Evaporator (°F)	Discharge Air (°F)	Average Product (°F)	Return Air (°F)	Discharge Air Velocity[3] (FPM)
OLFG[4]	275	12	31	35	38	125

[2] BTUHs/ft listed are for parallel operation. Conventional ratings may be approximated by multiplying listed rating by 1.04.

[3] Average discharge air velocity at peak of defrost.

[4] If the OLFG is piped to a suction header lower than 10°F an EPR with a suction stop solenoid is required. A liquid line solenoid alone does not allow the case to cycle properly. The thermostat probe should be located on the inlet of the top coil. The cut out point should be set to 12°F and the cut in point should be set so that refrigeration starts as soon as the coil ice starts to drip.

Defrost Controls

Model	Defrosts Per Day	Electric Defrost		Timed Off Defrost		Hot Gas Defrost		Reverse Air Defrost	
		Fail-safe (min)	Termination Temp. (°F)	Fail-safe (min)	Termination Temp. (°F)	Fail-safe (min)	Termination Temp. (°F)	Fail-safe (min)	Termination Temp. (°F)
OLFG	2	35	47	50	47	- - -[5]	- - -	- - -	- - -

[5] NOTE: - - - not an option on this case model.

Medium Temperature Defrost Schedule

No. Per Day	Hours
1	12 midnight
2	12 am - 12 pm
3	6 am - 2 pm - 10 pm
4	12 - 6 am - 12 - 6 pm

Hill PHOENIX EXCELLENCE™

A DOVER DIVERSIFIED COMPANY

All measurements are taken per CRMA specifications.

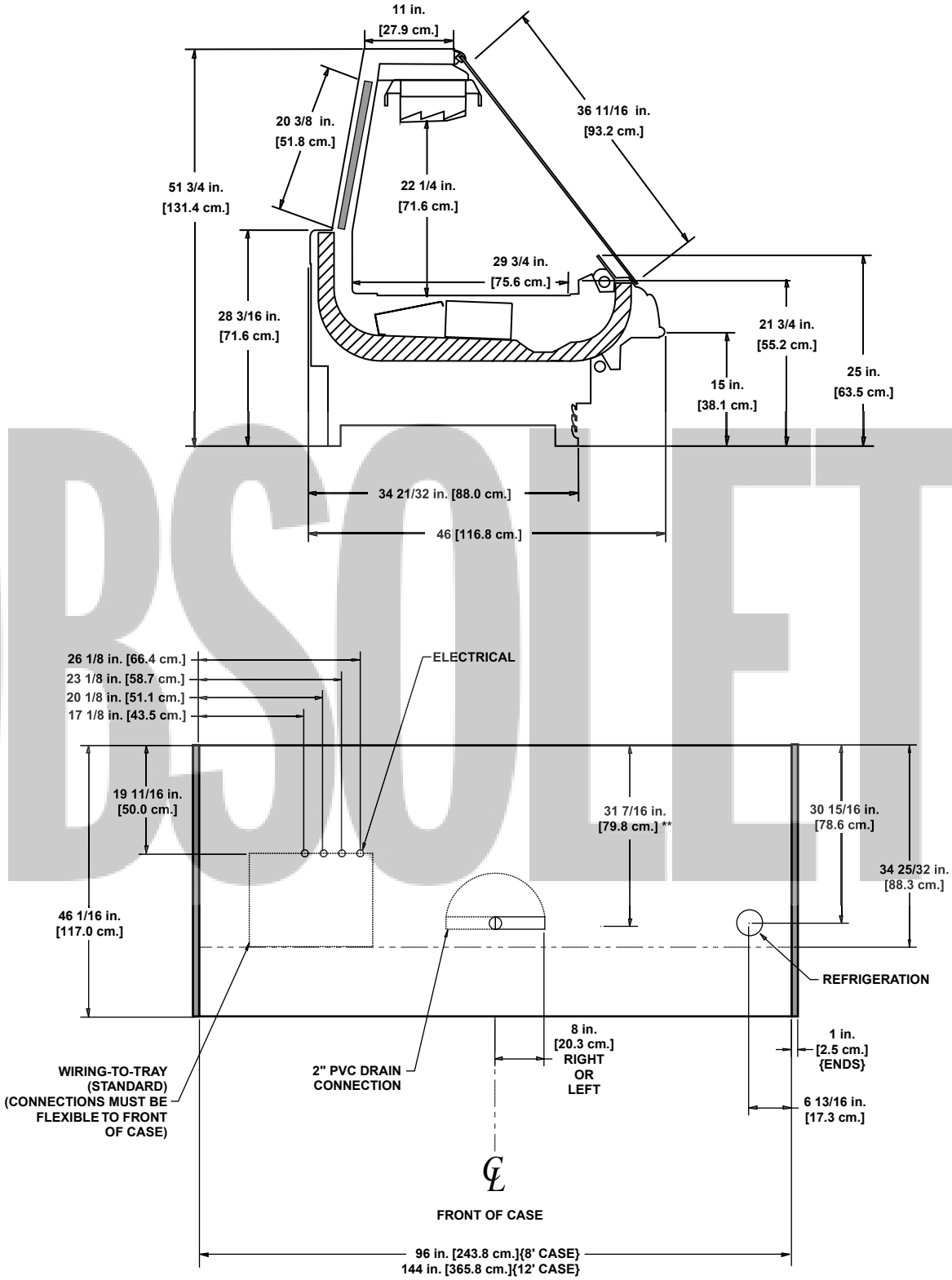

OBSOLETE

NOTES:

* STUB-UP AREA
** RECOMMENDED STUB-UP CENTERLINE FOR ELECTRICAL AND HUB DRAINS

• ENDS ADD APPROXIMATELY 1 INCH TO CASE HEIGHT

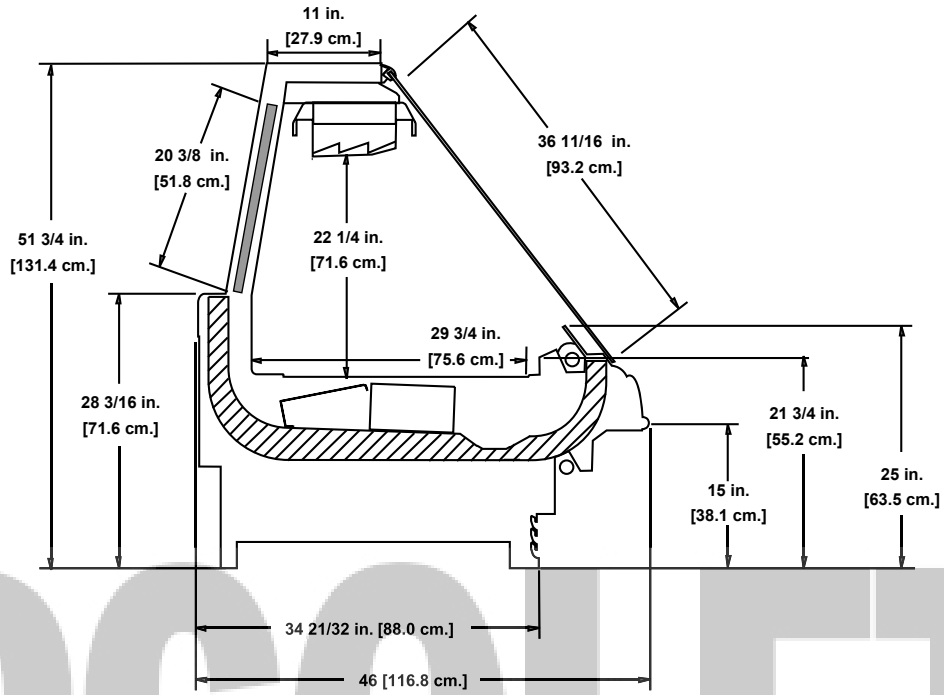

OBSOLETE

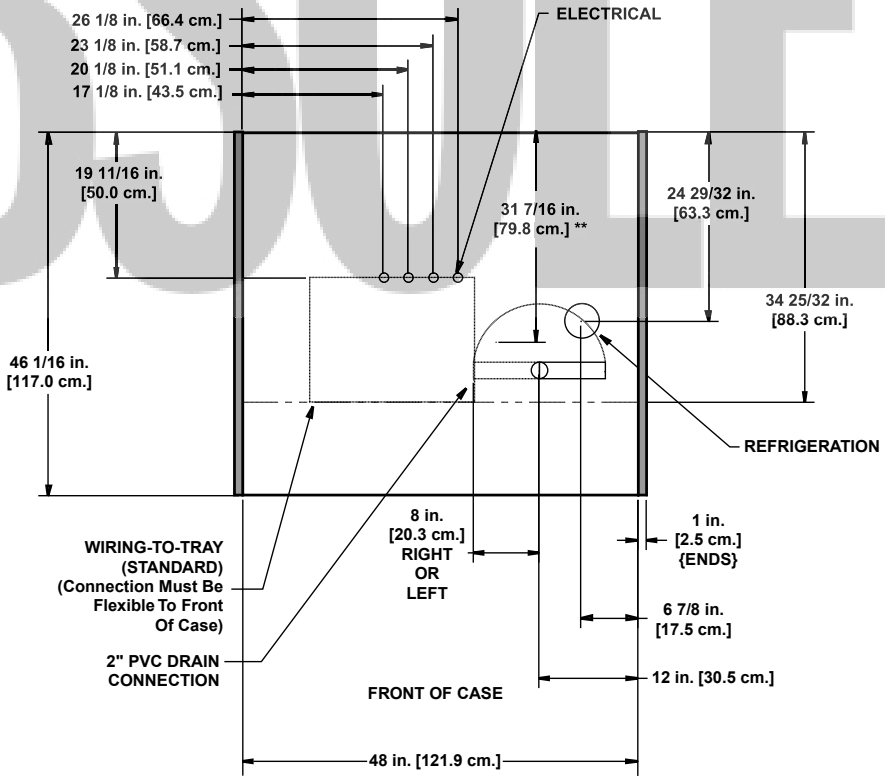

NOTES:

* STUB-UP AREA
** RECOMMENDED STUB-UP CENTERLINE FOR ELECTRICAL AND HUB DRAINS

• ENDS ADD APPROXIMATELY 1 INCH TO CASE HEIGHT

OBSOLETE

OSAH - 4’, 6’, & 8’ hot foods

Electrical Data

Model		Number of Hot Wells	Single Phase						Three Phase					
			208 Volts			220 Volts			208 Volts			220 Volts		
			Amps	Watts	Breaker	Amps	Watts	Breaker	Amps	Watts	Breaker	Amps	Watts	Breaker
OSAH	4’	3	16	3300	20	17.1	3800	25	10.0	3300	15	10.7	3800	15
	6’	5	25.3	5600	35	28.6	6300	40	15.8	5600	20	17.6	6300	25
	8’	7	36.9	7700	50	41.6	8700	55	23.7	7700	30	26.7	8700	35

OBSOLETE

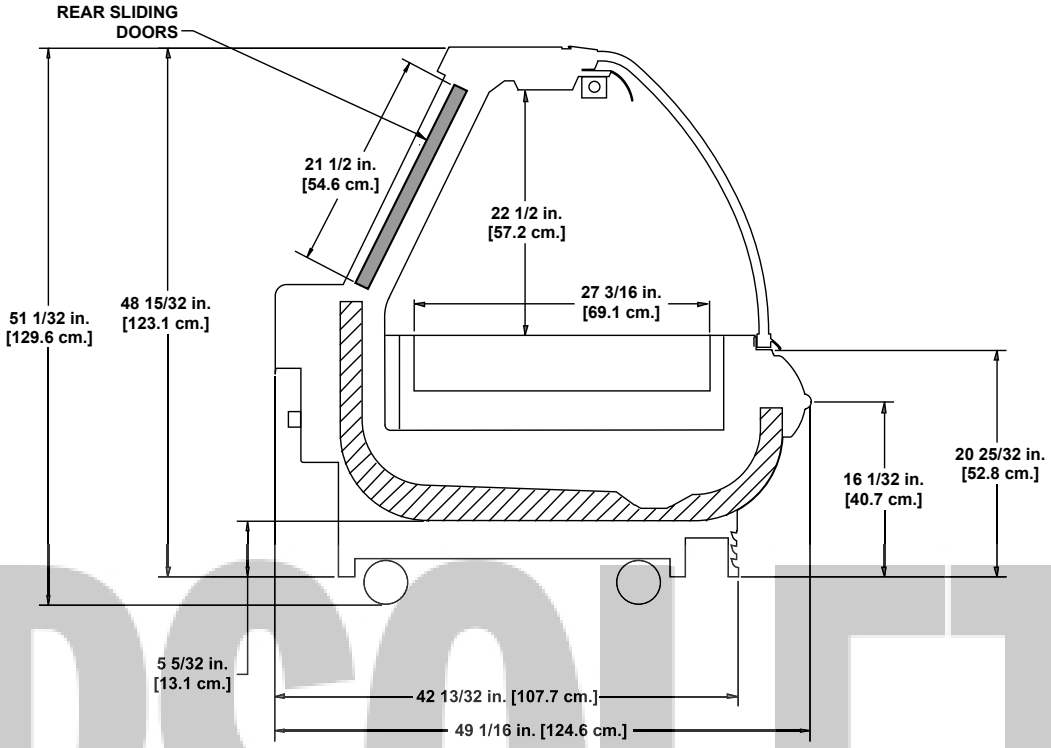

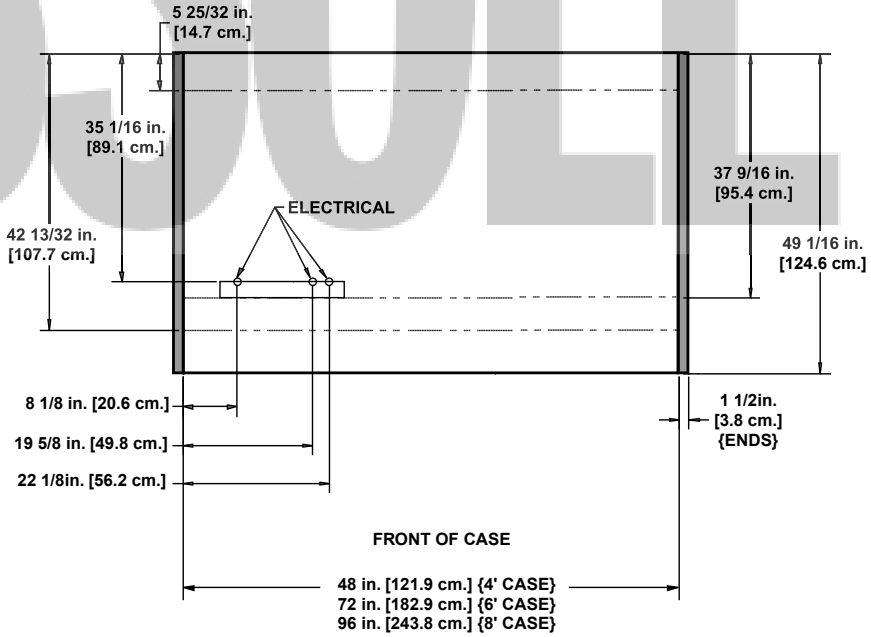

OBSOLETE

NOTES:

* STUB-UP AREA
** RECOMMENDED STUB-UP CENTERLINE FOR ELECTRICAL AND HUB DRAINS

• ENDS ADD APPROXIMATELY 1 INCH TO CASE HEIGHT

International Style Hot Foods Merchandisers

OSIH - 4', 6', & 8' hot foods

Electrical Data (Domestic)

Model		Number of Hot Wells	Single Phase						Three Phase					
			208 Volts			220 Volts			208 Volts			220 Volts		
			Amps	Watts	Breaker	Amps	Watts	Breaker	Amps	Watts	Breaker	Amps	Watts	Breaker
OSIH	4'	3	16	3300	20	17.1	3800	25	10.0	3300	15	10.7	3800	15
	6'	5	25.3	5600	35	28.6	6300	40	15.8	5600	20	17.6	6300	25
	8'	7	36.9	7700	50	41.6	8700	55	23.7	7700	30	26.7	8700	35

OBSOLETE

Electrical Data (European)

Model		Number of Hot Wells	Single Phase			Three Phase		
			220 Volts			380 Volts		
			Amps	Watts	Breaker	Amps	Watts	Breaker
OSIH	4'	3	17.1	3800	25	- - -	- - -	- - -
	6'	5	- - -	- - -	- - -	10.2	6300	15
	8'	7	- - -	- - -	- - -	15.3	8700	20

OBSOLETE

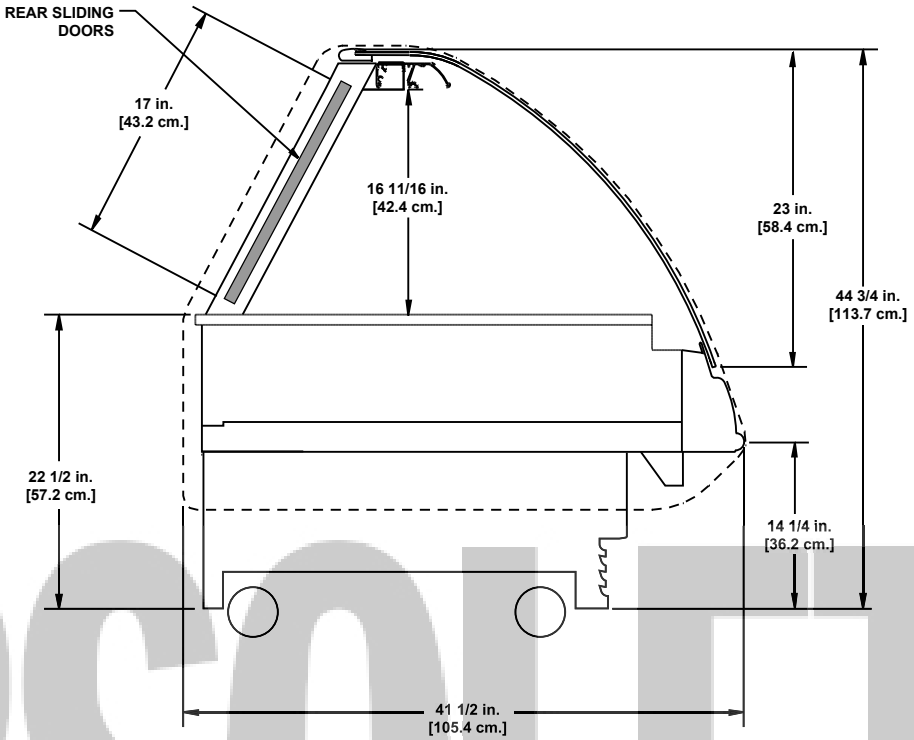

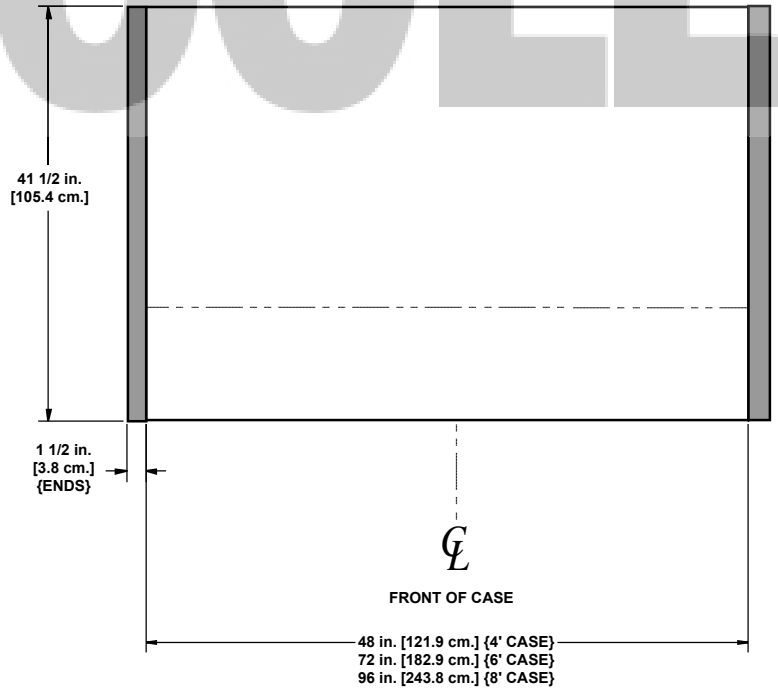

NOTE:

ENDS ADD APPROXIMATELY 1 INCH TO CASE HEIGHT

OBSOLETE

OBSOLETE

Self-Contained Merchandisers

Notes:

- *Average product temperatures are calculated as defined by ASHRAE* standards and should not be used to determine application.*
- *Cases meet FDA** Food Code 1997 product temperature requirements (41°F or less) for hazardous foods when used for their prescribed applications.*
- *Allow for an extra 1/8" per joint when lining up merchandisers.*
- *Front sill height does not affect case performance unless specifically shown.*

* *American Society of Heating Refrigeration and Air Conditioning Engineers*

** *Food and Drug Administration*

Single Deck Meat/Deli Self-Contained Mobile Merchandisers

MMCA-4' - mobile self-contained meat/deli

System Data

Model	Volts	Phase	Hz	Plug Style	Cord Length
MMCA-4'	120	1	60	NEMA 5-15	10 ft

Guidelines & Control Settings

Model	Front Sill Height	24 hr Energy Usage (kWh)	Suction Pressure @ Case Outlet (psig)	Superheat Set Point @ Bulb (°F)	Discharge Air (°F)	Average Product (°F)	Return Air (°F)	Discharge Air Velocity[2] (FPM)
MMCA-4'	35"	17.2	49	6-8	24	32	35	180

[1] Average discharge air velocity at peak of defrost.

OBSOLETE

Condensing Unit Data

Model	Volts	Phase	Frequency (Hz)	HP	RLA[2] (amps)	LRA[3] (amps)	Refrig.	lbs of Refrig.	Max. Evap. Temp. (°F)	High Side Press. (psig)	Low Side Press. (psig)
MMCA-4'	115	1	60	1/3	7.4	29.8	R404A	3.5	45	500	162

[2] RLA - Running Load Amps.
[3] LRA - Locked Rotor Amps.

Defrost Controls

Model	Defrosts Per Day	Electric Defrost		Timed Off Defrost		Hot Gas Defrost		Reverse Air Defrost	
		Fail-safe (min)	Termination Temp. (°F)	Fail-safe (min)	Termination Temp. (°F)	Fail-safe (min)	Termination Temp. (°F)	Fail-safe (min)	Termination Temp. (°F)
MMCA-4'	3	35	47	- - -[4]	- - -	- - -	- - -	- - -	- - -

[4] NOTE: - - - not an option on this case model.

Medium Temperature Defrost Schedule

No. Per Day	Hours
1	12 midnight
2	12 am - 12 pm
3	6 am - 2 pm - 10 pm
4	12 - 6 am - 12 - 6 pm

All measurements are taken per CRMA specifications.

Hill PHOENIX EXCELLENCE™
A DOVER DIVERSIFIED COMPANY
5/99

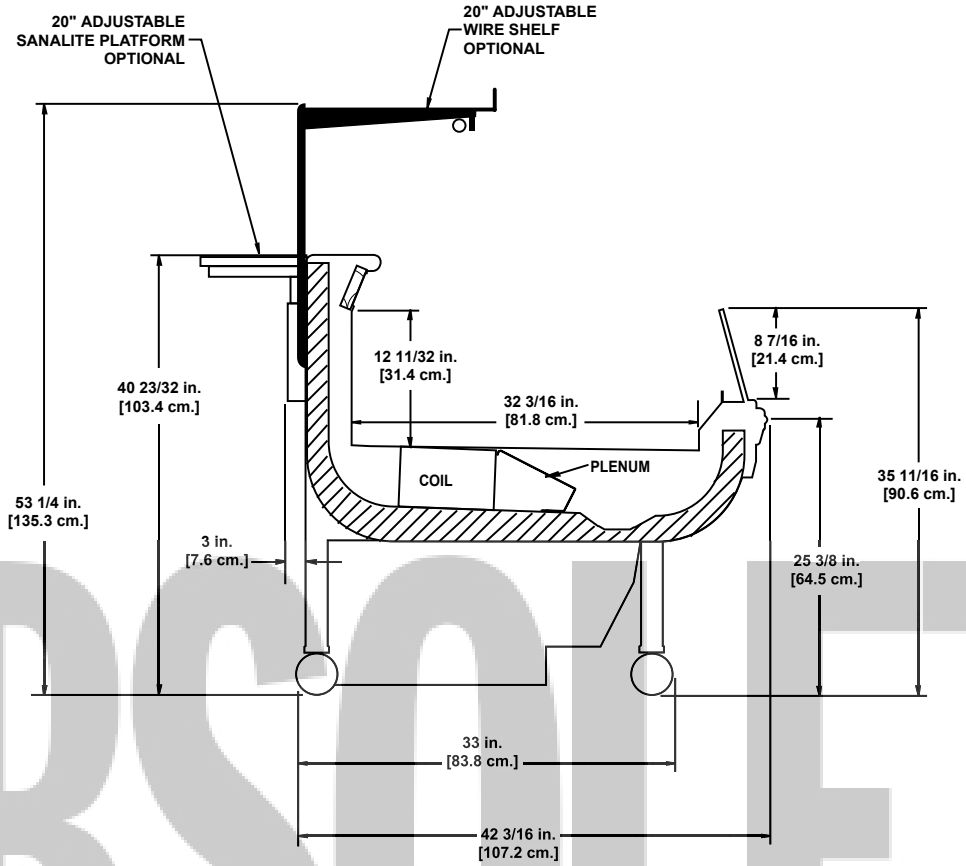

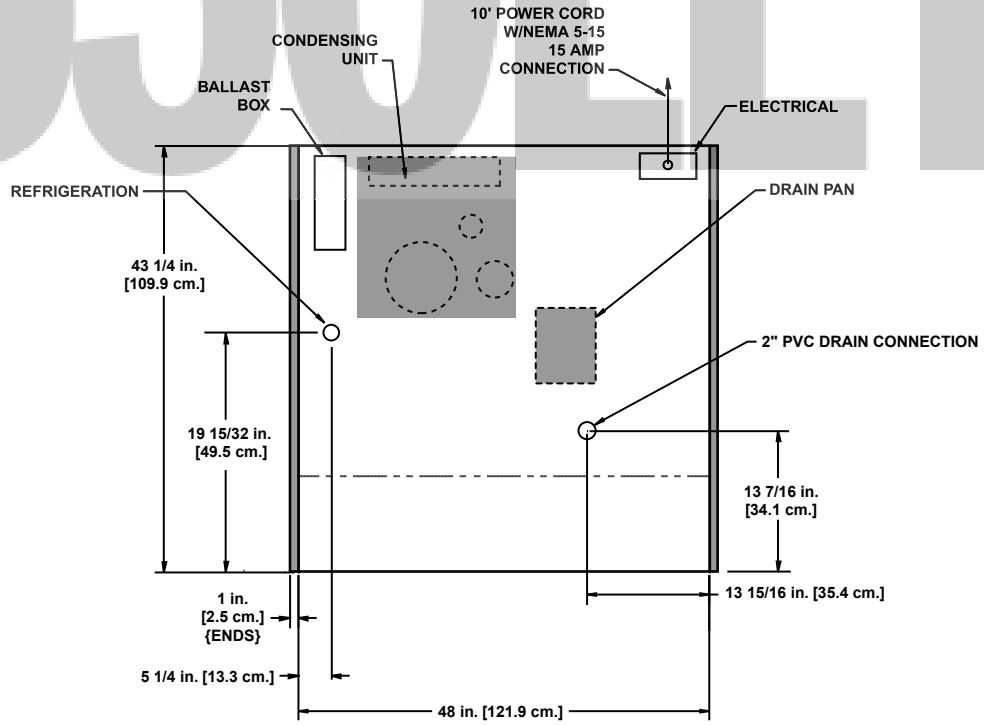

FRONT OF CASE

NOTE:

ENDS ADD APPROXIMATELY 1 INCH TO CASE HEIGHT

OBSOLETE

International Style Self-Service Deli/Seafood Self-Contained Mobile Merchandisers

OSIOA-4' - self service mobile self-contained deli/seafood

OBSOLETE

System Data

Model	Volts	Phase	Hz	Plug Style	Cord Length
OSIOA-4'	120	1	60	NEMA 5L20	10 ft

Guidelines & Control Settings

Model	24 hr Energy Usage (kWh)	Suction Pressure @ Case Outlet (psig)	Superheat Set Point @ Bulb (°F)	Discharge Air (°F)	Average Product (°F)	Return Air (°F)	Discharge Air Velocity[1] (FPM)
OSIOA-4'	14.1	12-14	6-8	26	33	34	182

[1] Average discharge air velocity at peak of defrost.

Condensing Unit Data

Model	Volts	Phase	Frequency (Hz)	HP	RLA[2] (amps)	LRA[3] (amps)	Refrig.	lbs of Refrig.	Max. Evap. Temp. (°F)	High Side Press. (psig)	Low Side Press. (psig)
OSIOA-4'	115	1	60	1/2	10.4	48.0	R134A	3.25	45	440	162

[2] RLA - Running Load Amps.
[3] LRA - Locked Rotor Amps.

Defrost Controls

Model	Defrosts Per Day	Electric Defrost		Timed Off Defrost		Hot Gas Defrost		Reverse Air Defrost	
		Fail-safe (min)	Termination Temp. (°F)	Fail-safe (min)	Termination Temp. (°F)	Fail-safe (min)	Termination Temp. (°F)	Fail-safe (min)	Termination Temp. (°F)
OSIOA-4'	4	40	47	- - -[4]	- - -	- - -	- - -	- - -	- - -

[4] NOTE: - - - not an option on this case model.

Medium Temperature Defrost Schedule

No. Per Day	Hours
1	12 midnight
2	12 am - 12 pm
3	6 am - 2 pm - 10 pm
4	12 - 6 am - 12 - 6 pm

Hill PHOENIX EXCELLENCE™

A DOVER DIVERSIFIED COMPANY

All measurements are taken per CRMA specifications.

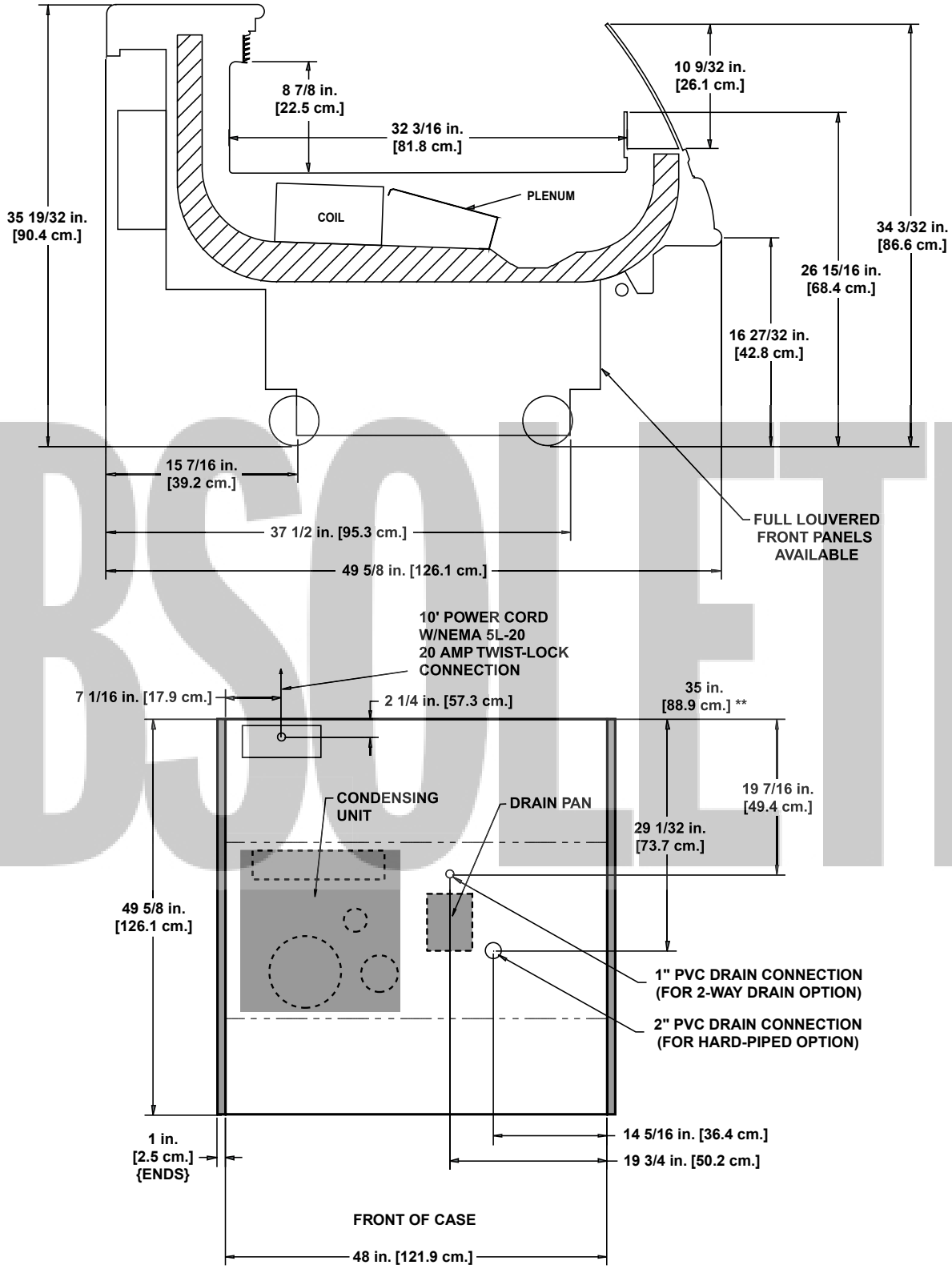

OBSOLETE

NOTE:

ENDS ADD APPROXIMATELY 1 INCH TO CASE HEIGHT

International Style Self-Service Deli/Meat Self-Contained Mobile Merchandisers

OSIOPA-4' - self service mobile self-contained deli/meat

OBSOLETE

System Data

Model	Volts	Phase	Hz	Plug Style	Cord Length
OSIOPA-4'	120	1	60	NEMA 5L20	10 ft

Guidelines & Control Settings

Model	24 hr Energy Usage (kWh)	Suction Pressure @ Case Outlet (psig)	Superheat Set Point @ Bulb (°F)	Discharge Air (°F)	Average Product (°F)	Return Air (°F)	Discharge Air Velocity[1] (FPM)
OSIOPA-4' deli	13.6	20	6-8	34	38	36	200
OSIOPA-4' meat	18.0	16	6-8	32	34	36	200

[1] Average discharge air velocity at peak of defrost.

Condensing Unit Data

Model	Volts	Phase	Frequency (Hz)	HP	RLA[2] (amps)	LRA[3] (amps)	Refrig.	lbs of Refrig.	Max. Evap. Temp. (°F)	High Side Press. (psig)	Low Side Press. (psig)
OSIOPA-4'	120	1	60	1/3	7.2	29.0	134A	2.25	45	440	162

[2] RLA - Running Load Amps.
[3] LRA - Locked Rotor Amps.

Defrost Controls

Model	Defrosts Per Day	Electric Defrost		Timed Off Defrost		Hot Gas Defrost		Reverse Air Defrost	
		Fail-safe (min)	Termination Temp. (°F)	Fail-safe (min)	Termination Temp. (°F)	Fail-safe (min)	Termination Temp. (°F)	Fail-safe (min)	Termination Temp. (°F)
OSIOPA-4'	2	40	47	- - -[4]	- - -	- - -	- - -	- - -	- - -

[4] NOTE: - - - not an option on this case model.

Medium Temperature Defrost Schedule

No. Per Day	Hours
1	12 midnight
2	12 am - 12 pm
3	6 am - 2 pm - 10 pm
4	12 - 6 am - 12 - 6 pm

Hill PHOENIX EXCELLENCE™

A DOVER DIVERSIFIED COMPANY

All measurements are taken per CRMA specifications.

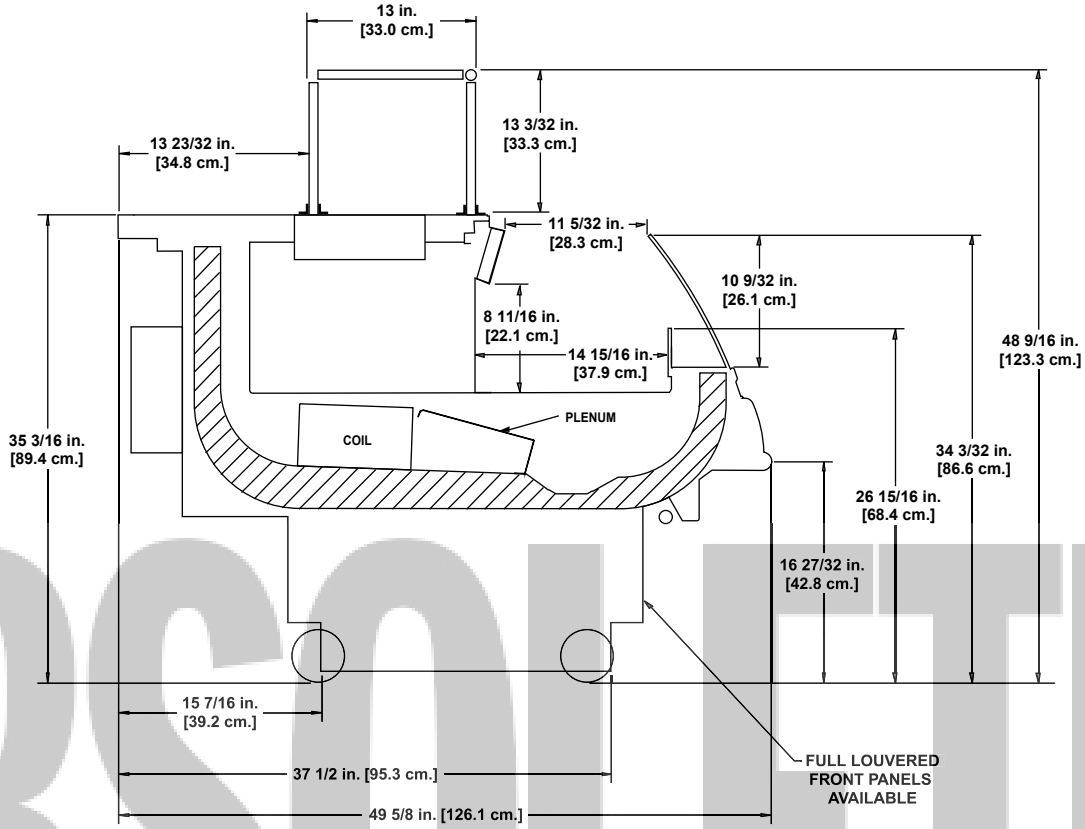

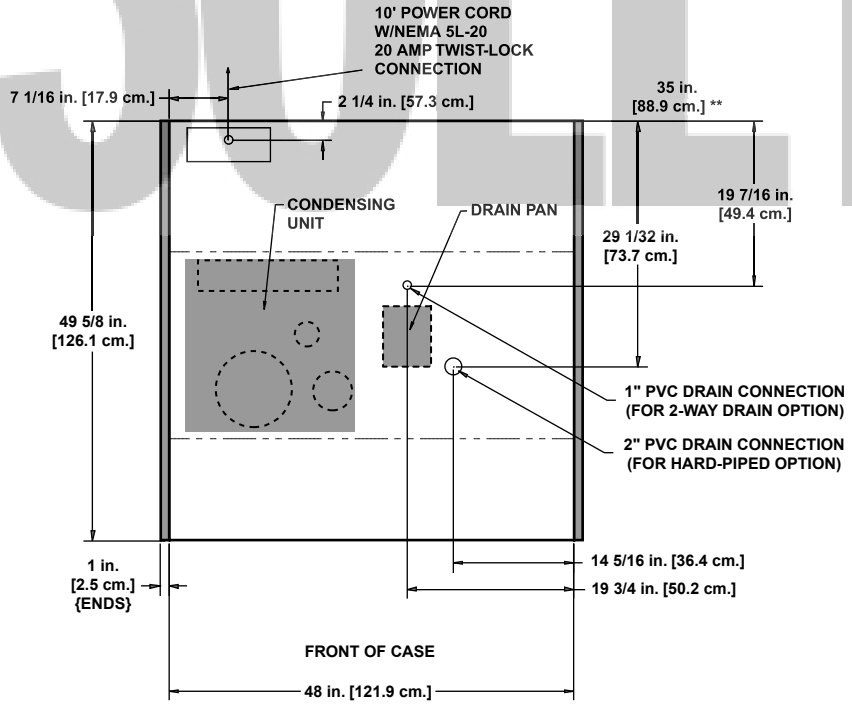

NOTE:

ENDS ADD APPROXIMATELY 1 INCH TO CASE HEIGHT

OBSOLETE

International Style Self-Service Dual Temp. Self-Contained Mobile Merchandisers

OSIOZA-4' - self-service mobile self-contained dual temp.

System Data

Model	Volts	Phase	Hz	Plug Style	Cord Length
OSIOZA-4'	120	1	60	NEMA 5L30	10 ft

Guidelines & Control Settings

Model	24 hr Energy Usage (kWh)	Suction Pressure @ Case Outlet (psig)	Superheat Set Point @ Bulb (°F)	Discharge Air (°F)	Average Product (°F)	Return Air (°F)	Discharge Air Velocity[1] (FPM)
OSIOZA-4'	25.0	12-14	3-4	-24	-6	-10	220

[1] Average discharge air velocity at peak of defrost.

OBSOLETE

Condensing Unit Data

Model	Volts	Phase	Frequency (Hz)	HP	RLA[2] (amps)	LRA[3] (amps)	Refrig.	lbs of Refrig.	Max. Evap. Temp. (°F)	High Side Press. (psig)	Low Side Press. (psig)
OSIOZA-4'	115	1	60	3/4	10.9	85.5	R404A	3.75	0	440	162

[2] RLA - Running Load Amps.
[3] LRA - Locked Rotor Amps.

Defrost Controls

Model	Defrosts Per Day	Electric Defrost		Timed Off Defrost		Hot Gas Defrost		Reverse Air Defrost	
		Fail-safe (min)	Termination Temp. (°F)	Fail-safe (min)	Termination Temp. (°F)	Fail-safe (min)	Termination Temp. (°F)	Fail-safe (min)	Termination Temp. (°F)
OSIOZA-4'	2	47	47	- - -[4]	- - -	- - -	- - -	- - -	- - -

[4] NOTE: - - - not an option on this case model.

Low Temperature Defrost Schedule

No. Per Day	Hours
1	10 pm
2	6 am - 10 pm**

** Or immediately after store closing hour

Hill PHOENIX™ EXCELLENCE

A DOVER DIVERSIFIED COMPANY

All measurements are taken per CRMA specifications.

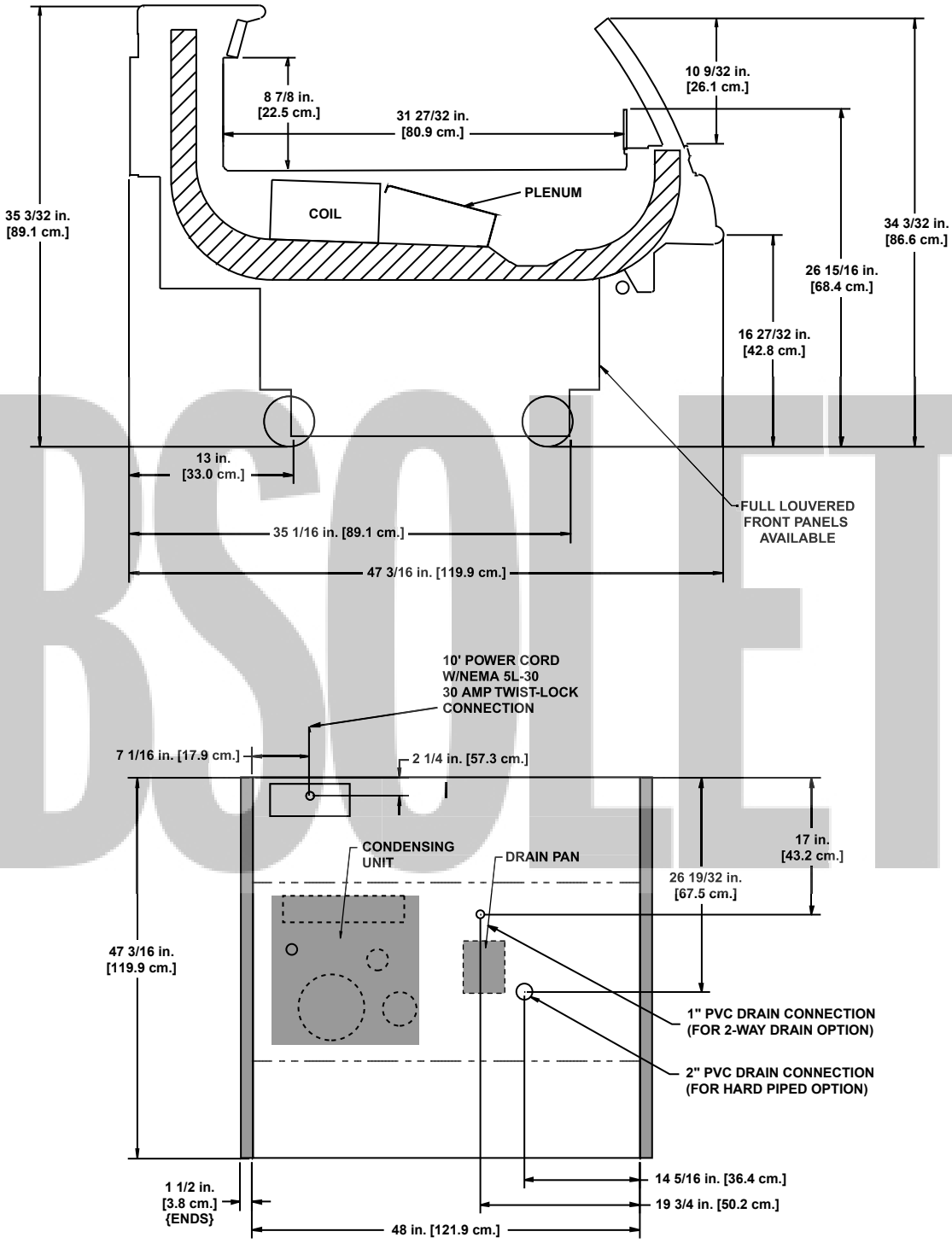

FRONT OF CASE

NOTE:

ENDS ADD APPROXIMATELY 1 INCH TO CASE HEIGHT

OBSOLETE

Multi-Deck Dairy/Deli/Meat Self-Contained Mobile Merchandisers

O2.5UMA-4' - mobile low profile self-contained

System Data

Model	Volts	Phase	Hz	Plug Style	Cord Length
O2.5UMA-4'	120	1	60	NEMA 5L20	10 ft

Guidelines & Control Settings

Model	Front Sill Height	24 hr Energy Usage (kWh)	Suction Pressure @ Case Outlet (psig)	Superheat Set Point @ Bulb (°F)	Discharge Air (°F)	Average Product (°F)	Return Air (°F)	Discharge Air Velocity[2] (FPM)
O2.5UMA-4' Produce	27"[1]	32.3	12-14	6-8	29-30	37	40-42	228
Deli	31"	30.2	12-14	6-8	25-27	35	39-41	230
Meat	33"	30.3	12-14	6-8	25-26	34	36-38	226

[1] Note: when ordering the 27" front a 4" piece of straight plexiglass must be placed in front of the return air baffle.

[2] Average discharge air velocity at peak of defrost.

OBSOLETE

Condensing Unit Data

Model	Volts	Phase	Frequency (Hz)	HP	RLA[3] (amps)	LRA[4] (amps)	Refrig.	lbs of Refrig.	Max. Evap. Temp. (°F)	High Side Press. (psig)	Low Side Press. (psig)
O2.5UMA-4'	115	1	60	1/2	12.9	66.3	R134A	3.6	25	440	162

[3] RLA - Running Load Amps.

[4] LRA - Locked Rotor Amps.

Defrost Controls

Model	Defrosts Per Day	Electric Defrost		Timed Off Defrost		Hot Gas Defrost		Reverse Air Defrost	
		Fail-safe (min)	Termination Temp. (°F)	Fail-safe (min)	Termination Temp. (°F)	Fail-safe (min)	Termination Temp. (°F)	Fail-safe (min)	Termination Temp. (°F)
O2.5UMA-4'	3	40	49	- - -[5]	- - -	- - -	- - -	- - -	- - -

[5] NOTE: - - - not an option on this case model.

Medium Temperature Defrost Schedule

No. Per Day	Hours
1	12 midnight
2	12 am - 12 pm
3	6 am - 2 pm - 10 pm
4	12 - 6 am - 12 - 6 pm

All measurements are taken per CRMA specifications.

Hill PHOENIX EXCELLENCE™
A DOVER DIVERSIFIED COMPANY
5/99

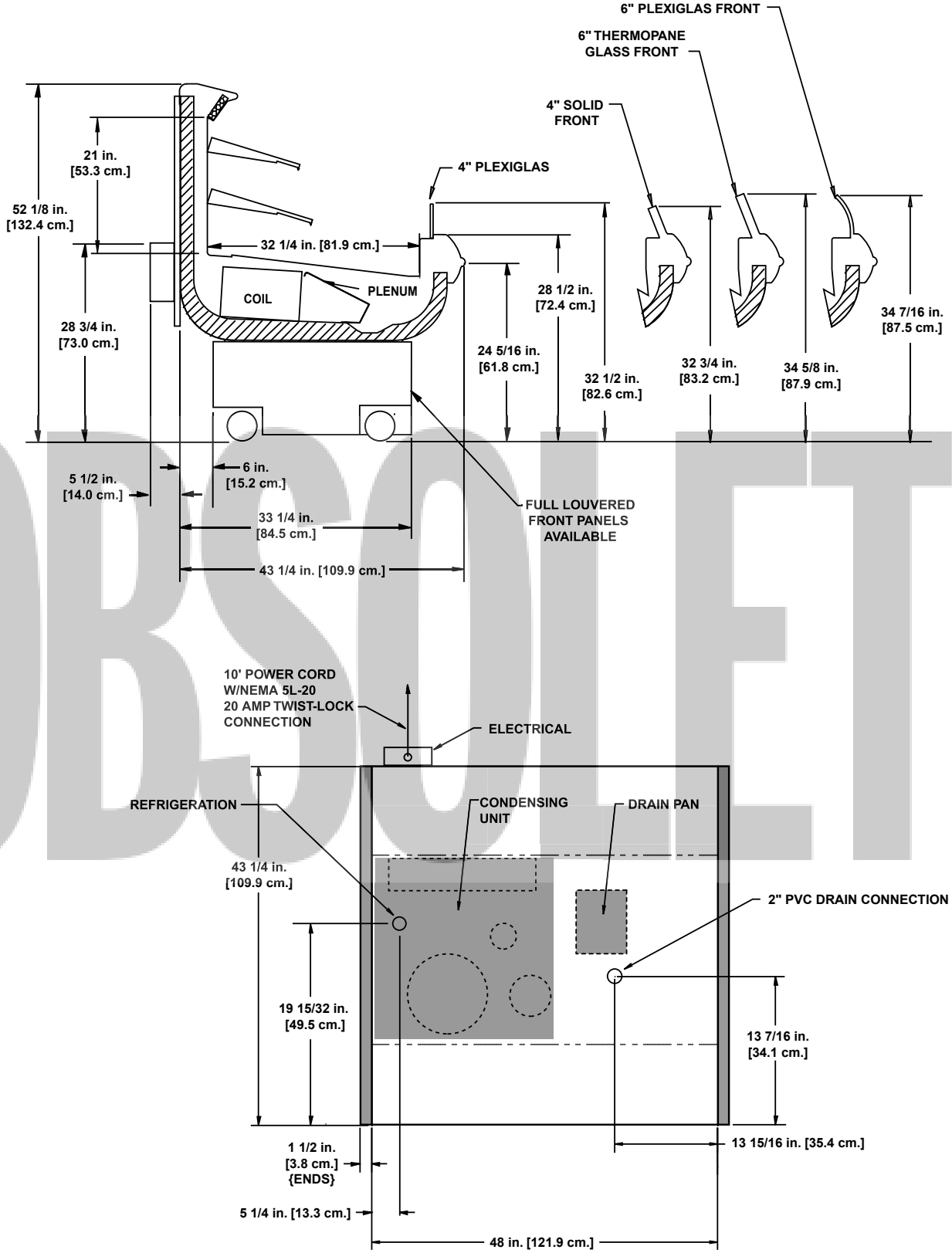

NOTE:

ENDS ADD APPROXIMATELY 1 INCH TO CASE HEIGHT

OBSOLETE

Multi-Deck Dairy/Deli/Meat Self-Contained Mobile Merchandisers

O3UMA-4' - low profile self-contained

System Data

Model	Volts	Phase	Hz	Plug Style	Cord Length
O3UMA-4'	120	1	60	NEMA 5L20	10 ft

Guidelines & Control Settings

Model	Front Sill Height	24 hr Energy Usage (kWh)	Suction Pressure @ Case Outlet (psig)	Superheat Set Point @ Bulb (°F)	Discharge Air (°F)	Average Product (°F)	Return Air (°F)	Discharge Air Velocity[2] (FPM)
O3UMA-4'	31"	31.8	12-14	6-8	26	32	35	230

[1] Average discharge air velocity at peak of defrost.

OBSOLETE

Condensing Unit Data

Model	Volts	Phase	Frequency (Hz)	HP	RLA[3] (amps)	LRA[4] (amps)	Refrig.	lbs of Refrig.	Max. Evap. Temp. (°F)	High Side Press. (psig)	Low Side Press. (psig)
O3UMA-4'	115	1	60	1/2	12.9	66.3	134A	3.6	25	440	162

[3] RLA - Running Load Amps.
[4] LRA - Locked Rotor Amps.

Defrost Controls

Model	Defrosts Per Day	Electric Defrost		Timed Off Defrost		Hot Gas Defrost		Reverse Air Defrost	
		Fail-safe (min)	Termination Temp. (°F)	Fail-safe (min)	Termination Temp. (°F)	Fail-safe (min)	Termination Temp. (°F)	Fail-safe (min)	Termination Temp. (°F)
O3UMA-4'	3	40	49	- - -[5]	- - -	- - -	- - -	- - -	- - -

[5] NOTE: - - - not an option on this case model.

Medium Temperature Defrost Schedule

No. Per Day	Hours
1	12 midnight
2	12 am - 12 pm
3	6 am - 2 pm - 10 pm
4	12 - 6 am - 12 - 6 pm

Hill PHOENIX EXCELLENCE™

A DOVER DIVERSIFIED COMPANY

All measurements are taken per CRMA specifications.

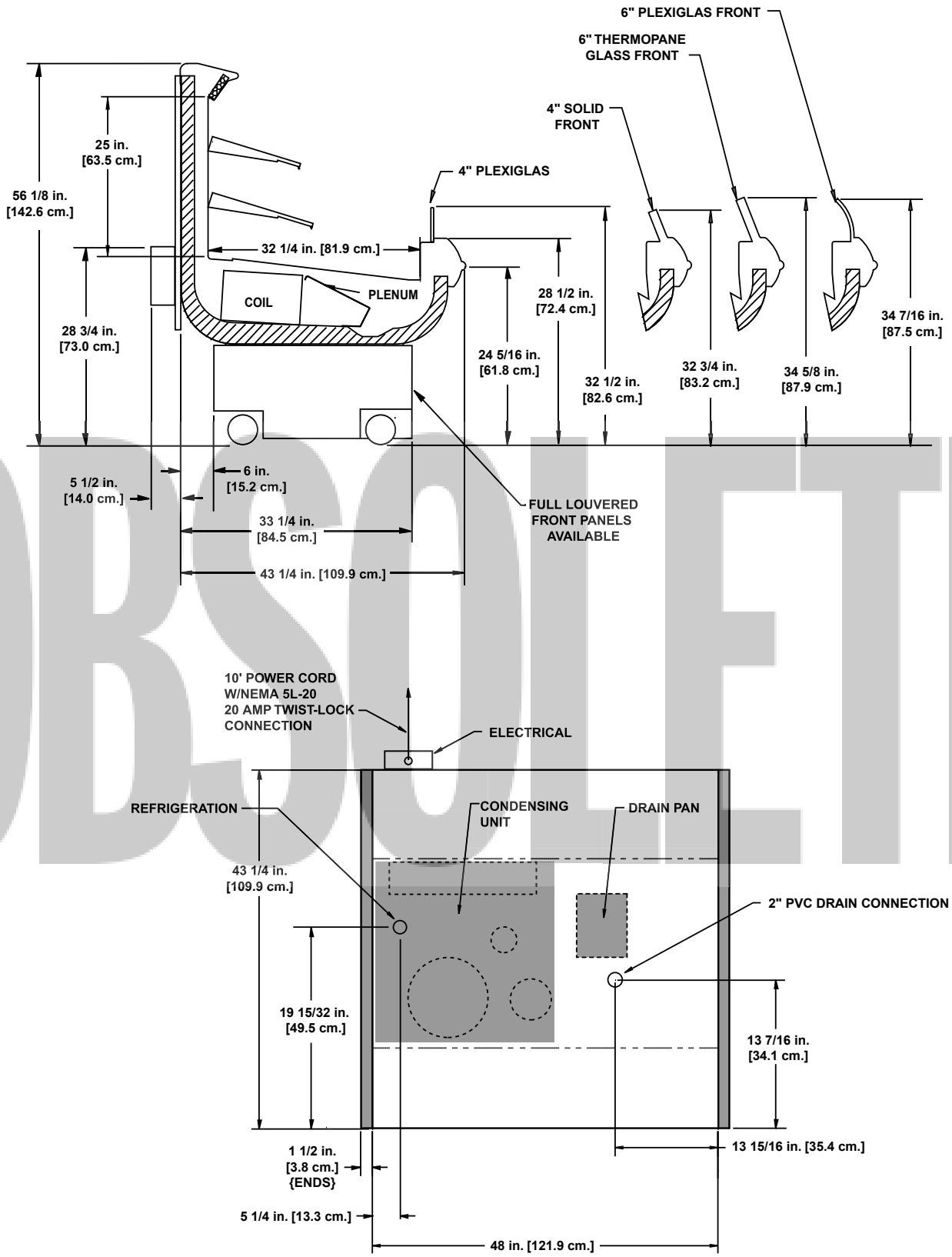

FRONT OF CASE

NOTE:

ENDS ADD APPROXIMATELY 1 INCH TO CASE HEIGHT

OBSOLETE

Multi-Deck Self-Contained Dairy/Deli/Produce Merchandisers

O5DMA - 4', 6', & 8' self-contained dairy/deli/produce

System Requirements

Model		Volts	Phase	Hz	Wire	Minimum Circuit Ampacity	Maximum Fuse Size
O5DMA	4'	208/230	1	60	3 wire + ground	27.90	30
	6'	208/230	1	60	3 wire + ground	28.90	40
	8'	208/230	1	60	3 wire + ground	29.40	40

Electrical Data

Model		Fans per Case	Standard Fans		High Efficiency Fans		Drain Pump		Drain Heater		Maximum Lights	
			120 Volts		120 Volts		120 Volts		240 Volts		120 Volts	
			Amps	Watts	Amps	Watts	Amps	Watts	Amps	Watts	Amps	Watts
O5DMA	4'	2	1.00	60	1.00	34	1.10	132	6.28	1500	2.63	316
	6'	2	1.00	60	1.00	34	1.10	132	6.28	1500	4.47	536
	8'	3	1.50	90	1.50	51	1.10	132	6.28	1500	4.10	492

OBSOLETE

Guidelines & Control Settings

Model	24 hr Energy Usage (kWh)	Suction Pressure @ Case Outlet (psig)	Superheat Set Point @ Bulb (°F)	Discharge Air (°F)	Average Product (°F)	Return Air (°F)	Discharge Air Velocity[1] (FPM)
O5DMA-4'		52	6-8	30	35	44	250
O5DMA-6'		52	6-8	30	35	44	250
O5DMA-8'		52	6-8	30	35	44	250

[1] Average discharge air velocity at peak of defrost.

Condensing Unit Data

Model	Volts	Phase	Frequency (Hz)	HP	RLA[2] (amps)	LRA[3] (amps)	Refrig.	lbs of Refrig.	Max. Evap. Temp. (°F)	High Side Press. (psig)	Low Side Press. (psig)
O5DMA-4'	208	1	60	1	11	51	404A	4.5	45	500	174
O5DMA-6'	208	1	60	1 3/4	10.9	56	404A		45	500	174
O5DMA-8'	208	1	60	2	12.4	61	404A		45	500	174

[2] RLA - Running Load Amps.

[3] LRA - Locked Rotor Amps.

Defrost Controls

Model	Defrosts Per Day	Electric Defrost		Timed Off Defrost		Hot Gas Defrost		Reverse Air Defrost	
		Fail-safe (min)	Termination Temp. (°F)	Fail-safe (min)	Termination Temp. (°F)	Fail-safe (min)	Termination Temp. (°F)	Fail-safe (min)	Termination Temp. (°F)
O5DMA	3	- - - [4]	- - -	42	44	- - -	- - -	- - -	- - -

[4] NOTE: - - - not an option on this case model.

Medium Temperature Defrost Schedule

No. Per Day	Hours
1	12 midnight
2	12 am - 12 pm
3	6 am - 2 pm - 10 pm
4	12 - 6 am - 12 - 6 pm

Hill PHOENIX EXCELLENCE™

A DOVER DIVERSIFIED COMPANY

All measurements are taken per CRMA specifications.

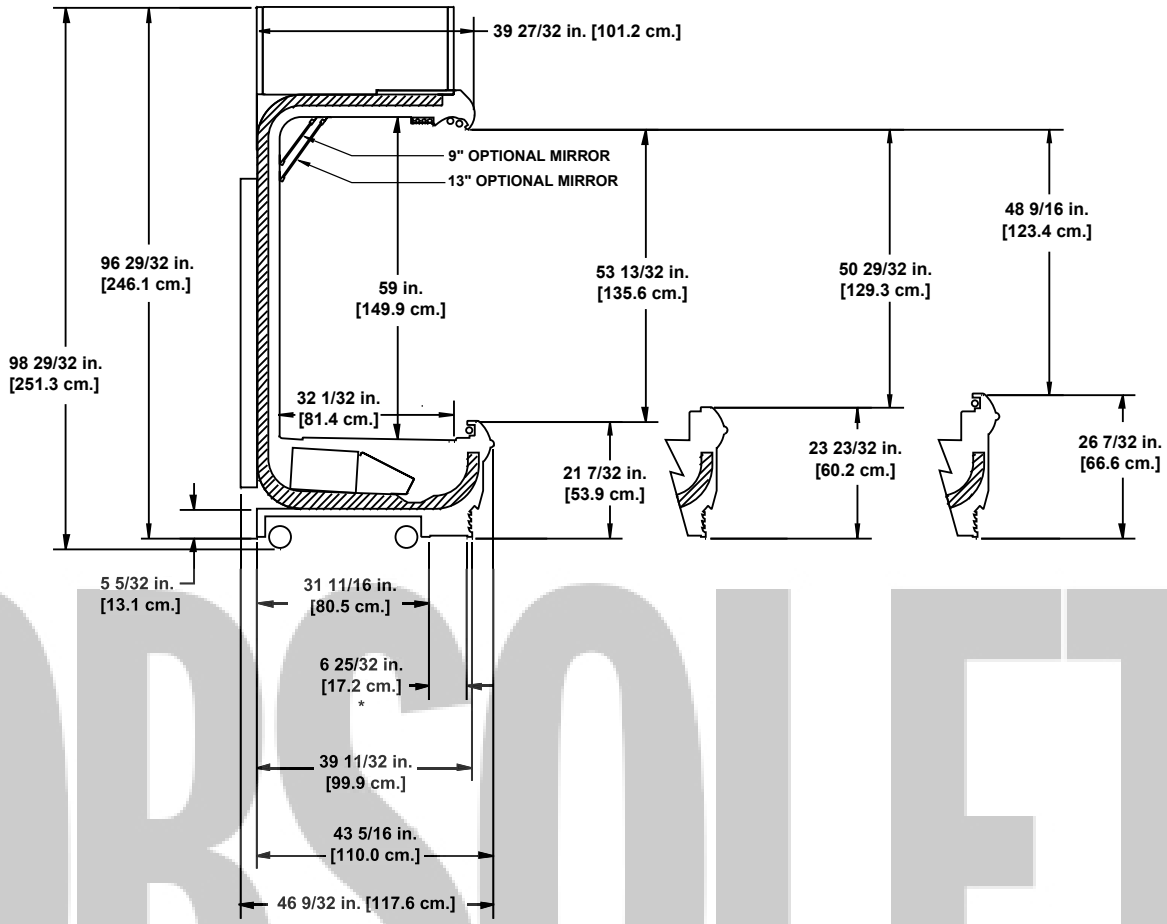

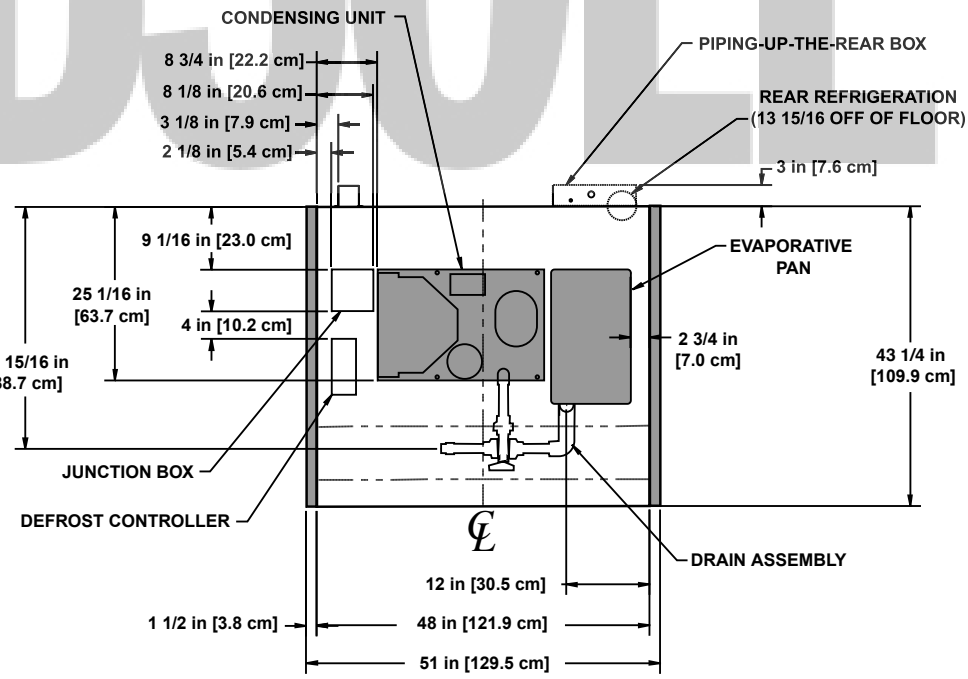

NOTES:

- A 2" MINIMUM AIR GAP IS REQUIRED BETWEEN THE REAR OF THE CASE AND A WALL (WHEN THE CASE IS PIPED TO THE REAR A 3" TO 4" GAP MAY BE REQUIRED)
- SUCTION LINE 5/8", LIQUID LINE - 3/8"

OBSOLETE

OBSOLETE

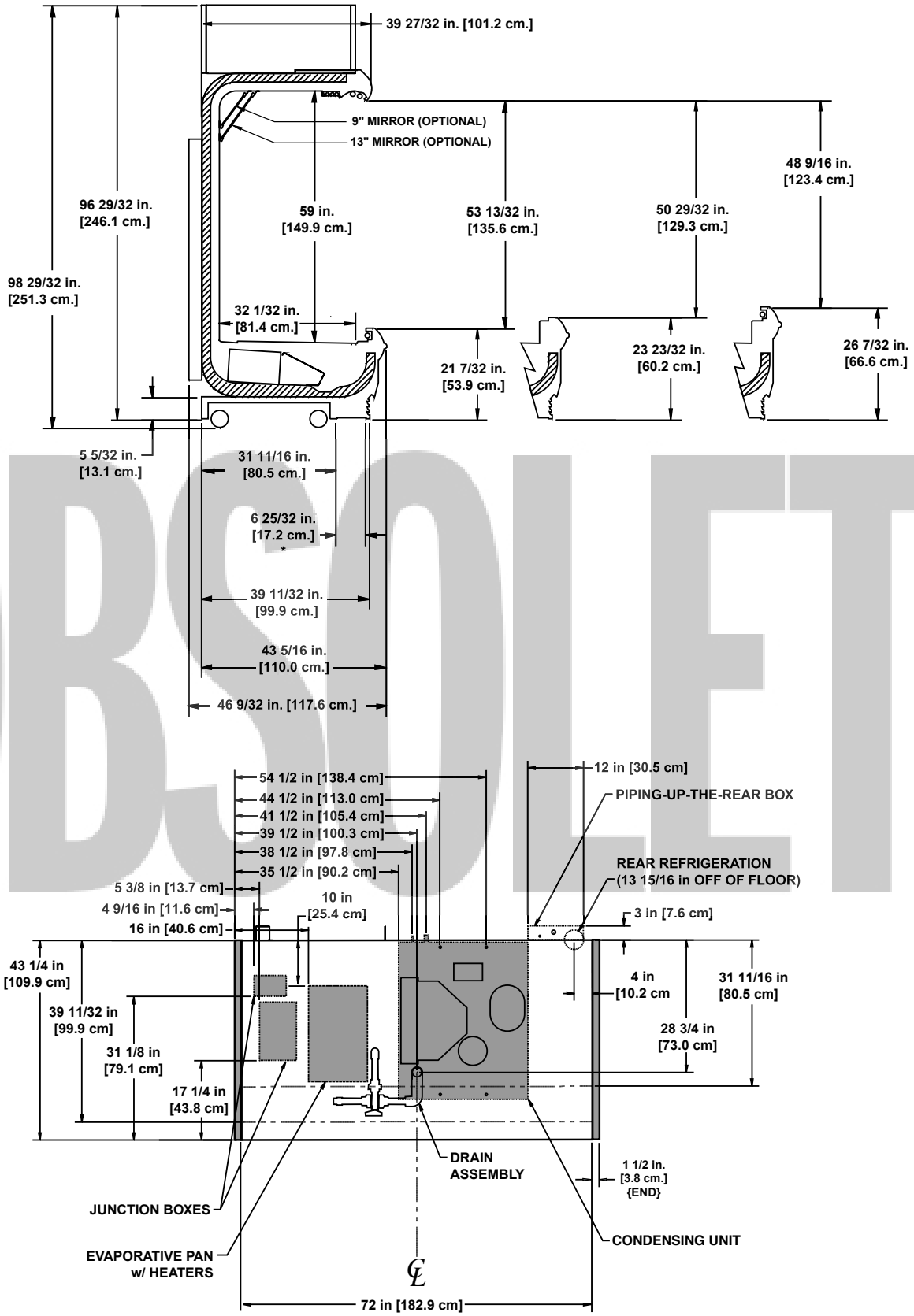

NOTES:

- A 2" MINIMUM AIR GAP IS REQUIRED BETWEEN THE REAR OF THE CASE AND A WALL (WHEN THE CASE IS PIPED TO THE REAR A 3" TO 4" GAP MAY BE REQUIRED)
- SUCTION LINE 5/8", LIQUID LINE - 3/8"

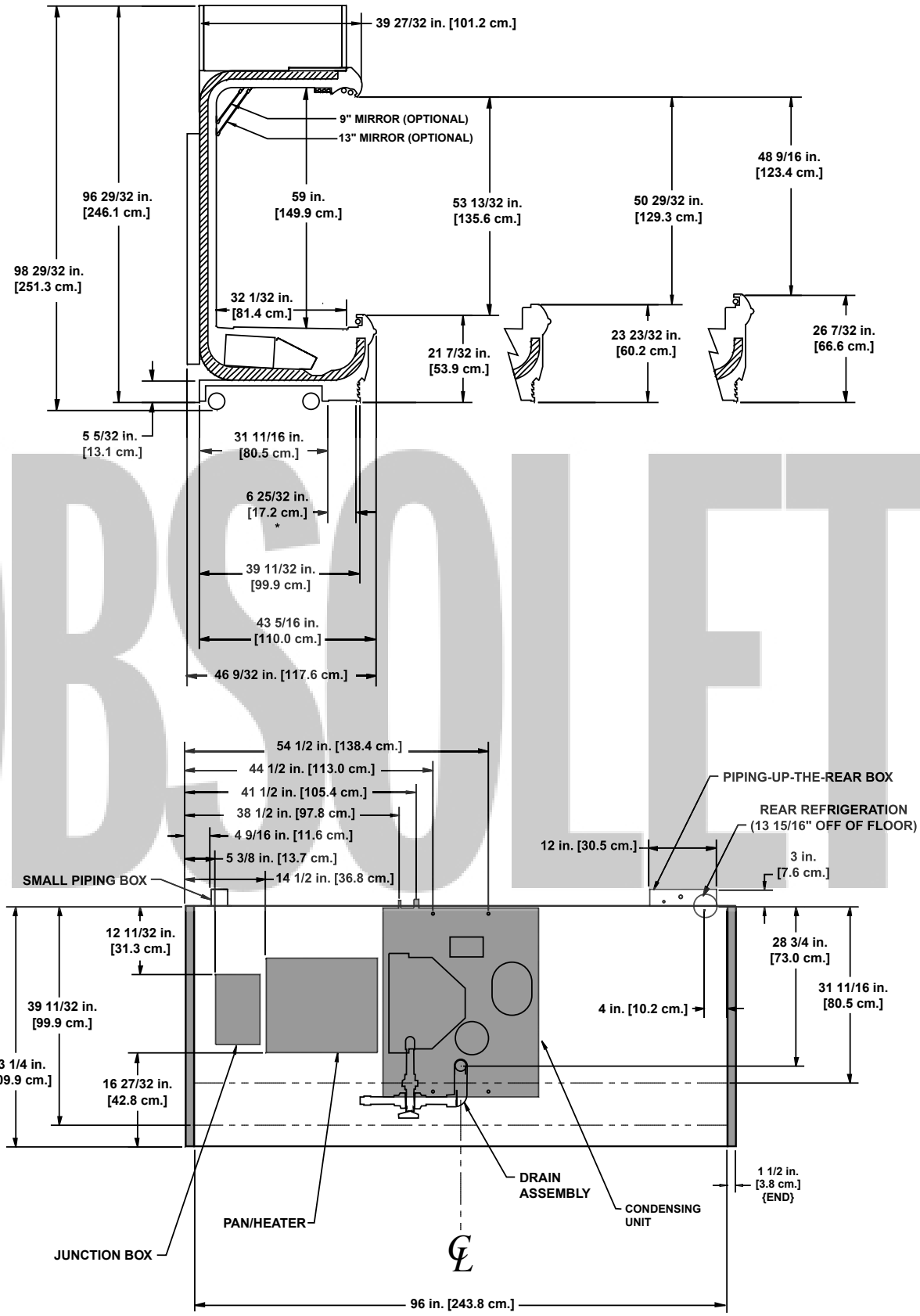

OBSOLETE

NOTES:

- A 2" MINIMUM AIR GAP IS REQUIRED BETWEEN THE REAR OF THE CASE AND A WALL (WHEN THE CASE IS PIPED TO THE REAR A 3" TO 4" GAP MAY BE REQUIRED)
- SUCTION LINE 5/8", LIQUID LINE - 3/8"

Narrow Multi-Deck Self-Contained Dairy/Deli/Meat Merchandiser

ONUA - 4'/47" & 6'/71" narrow dairy/deli/meat

System Requirements

Model		Volts	Phase	Hz	Wire	Minimum Circuit Ampacity	Maximum Fuse Size
ONUA	4'/47"	208/230	1	60	3 wire + ground	19.91	25
	6'/71"	208/230	1	60	3 wire + ground	27.95	35

Electrical Data

Model		Fans per Case	Standard Fans		High Efficiency Fans		Drain Pump		Drain Heater		Maximum Lights	
			120 Volts		120 Volts		120 Volts		240 Volts		120 Volts	
			Amps	Watts	Amps	Watts	Amps	Watts	Amps	Watts	Amps	Watts
ONUA	4'/47"	2	1.00	60	1.00	34	0.90	108	6.28	1500	2.06	247
	6'/71"	3	1.50	90	1.50	51	1.10	132	6.28	1500	3.90	468

OBSOLETE

Guidelines & Control Settings

Model	24 hr Energy Usage (kWh)	Suction Pressure @ Case Outlet (psig)	Superheat Set Point @ Bulb (°F)	Discharge Air (°F)	Average Product (°F)	Return Air (°F)	Discharge Air Velocity[1] (FPM)
ONUA-4'/47"	43.9	33	6-8	27.5	34	39	310
ONUA-6'/71"	59.3	33	6-8	27.5	34	39	310

[1] Average discharge air velocity at peak of defrost.

Condensing Unit Data

Model	Volts	Phase	Frequency (Hz)	HP	RLA[2] (amps)	LRA[3] (amps)	Refrig.	lbs of Refrig.	Max. Evap. Temp. (°F)	High Side Press. (psig)	Low Side Press. (psig)
ONUA-4'/47"	208-230	1	60	1	7.0	34.2	R-22	5.9	45	500	174
ONUA-6'/71"	208-230	1	60	1 1/2	10.4	48.2	R-22	6.75	45	500	174

[2] RLA - Running Load Amps.
[3] LRA - Locked Rotor Amps.

Defrost Controls

Model	Defrosts Per Day	Electric Defrost		Timed Off Defrost		Hot Gas Defrost		Reverse Air Defrost	
		Fail-safe (min)	Termination Temp. (°F)	Fail-safe (min)	Termination Temp. (°F)	Fail-safe (min)	Termination Temp. (°F)	Fail-safe (min)	Termination Temp. (°F)
ONUA	4	- - - [4]	- - -	40	45	- - -	- - -	- - -	- - -

[4] Average discharge air velocity at peak of defrost.

Medium Temperature Defrost Schedule

No. Per Day	Hours
1	12 midnight
2	12 am - 12 pm
3	6 am - 2 pm - 10 pm
4	12 - 6 am - 12 - 6 pm

All measurements are taken per CRMA specifications.

Hill PHOENIX EXCELLENCE™

A DOVER DIVERSIFIED COMPANY

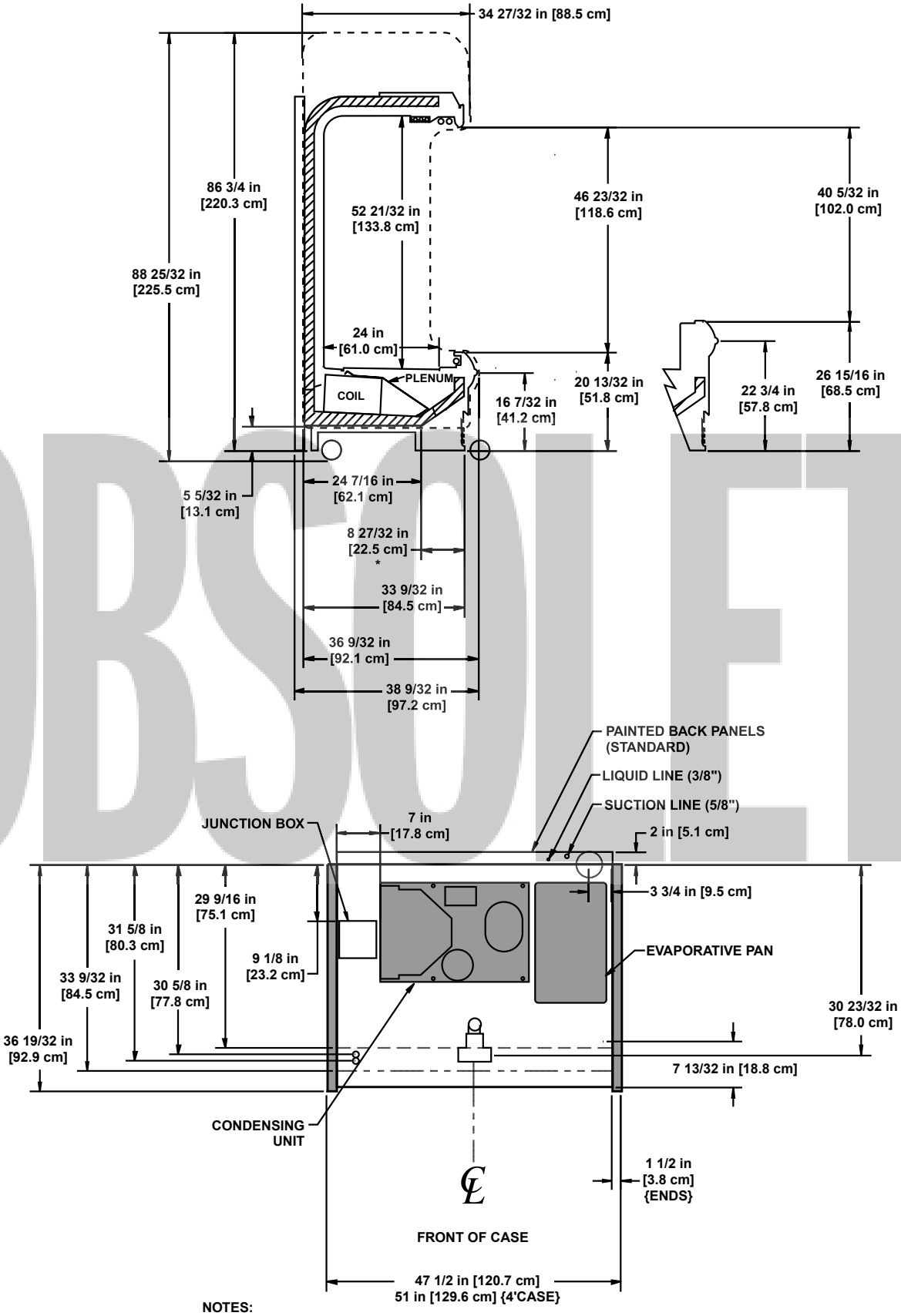

NOTES:

* STUB-UP AREA

** RECOMMENDED STUB-UP CENTERLINE FOR ELECTRICAL AND HUB DRAINS

• A 2" MINIMUM AIR GAP IS REQUIRED BETWEEN THE REAR OF THE CASE AND A WALL

OBSOLETE

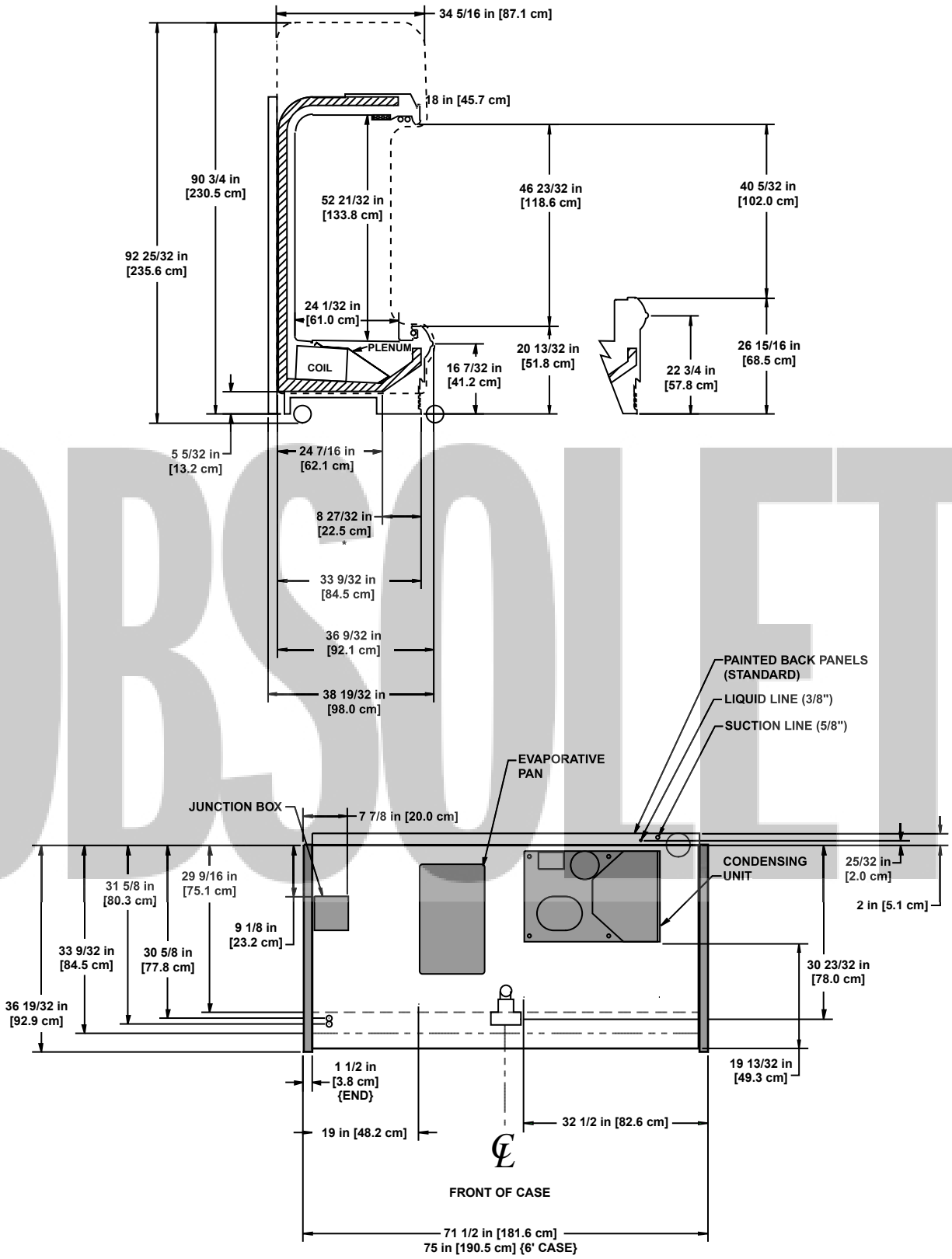

OBSOLETE

NOTES:

* STUB-UP AREA
** RECOMMENDED STUB-UP CENTERLINE FOR ELECTRICAL AND HUB DRAINS
• A 2" MINIMUM AIR GAP IS REQUIRED BETWEEN THE REAR OF THE CASE AND A WALL

OBSOLETE

Wide Island Self-Contained Meat/Deli Merchandisers

OIMA - 8' & 12' self-contained wide island double wraparound end

System Requirements

Model		Volts	Phase	Hz	Wire	Minimum Circuit Ampacity	Maximum Fuse Size
OIMA	8'	208/230	1	60	3 wire + ground	26.4	35
	12'	208/230	1	60	3 wire + ground	31.6	35

Electrical Data

Model		Fans per Case	Standard Fans		High Efficiency Fans		Anti-Condensate Heaters		Defrost Heaters				Drain Heater		Maximum Lights	
			120 Volts		120 Volts		120 Volts		208 Volts		240 Volts		240 Volts		120 Volts	
			Amps	Watts	Amps	Watts	Amps	Watts	Amps	Watts	Amps	Watts	Amps	Watts	Amps	Watts
OIMA	8'	6	2.04	102	0.90	66	0.82	98	4.34	9.02	5.00	1200	5.55	1331	5.04	606
	12'	8	2.72	136	1.20	88	1.08	130	7.22	1502	8.33	2000	5.55	1331	6.50	780

OBSOLETE

Guidelines & Control Settings

Model	24 hr Energy Usage (kWh)	Suction Pressure @ Case Outlet (psig)	Superheat Set Point @ Bulb (°F)	Discharge Air (°F)	Average Product (°F)	Return Air (°F)	Discharge Air Velocity[1] (FPM)
OIMA-8'		35	6-8	26	34	31	140
OIMA-12'		35	6-8	26	34	31	140

[1] Average discharge air velocity at peak of defrost.

Condensing Unit Data

Model	Volts	Phase	Frequency (Hz)	HP	RLA[3] (amps)	LRA[4] (amps)	Refrig.	lbs of Refrig.	Max. Evap. Temp. (°F)	High Side Press. (psig)	Low Side Press. (psig)
OIMA-8'	208-230	1	60	1	10.36	48.2	R22	8.2	45	360	215
OIMA-12'[2]	208-230	1	60	1	7.0	34.2	R22	12.6	45	360	215

[2] This case uses two of the condensing units listed above.
[3] RLA - Running Load Amps.
[4] LRA - Locked Rotor Amps.

Defrost Controls

Model	Defrosts Per Day	Electric Defrost		Timed Off Defrost		Hot Gas Defrost		Reverse Air Defrost	
		Fail-safe (min)	Termination Temp. (°F)	Fail-safe (min)	Termination Temp. (°F)	Fail-safe (min)	Termination Temp. (°F)	Fail-safe (min)	Termination Temp. (°F)
OIMA	3	40	42	- - - [5]	- - -	- - -	- - -	- - -	- - -

[5] NOTE: - - - not an option on this case model.

Medium Temperature Defrost Schedule

No. Per Day	Hours
1	12 midnight
2	12 am - 12 pm
3	6 am - 2 pm - 10 pm
4	12 - 6 am - 12 - 6 pm

Hill PHOENIX™ EXCELLENCE

A DOVER DIVERSIFIED COMPANY

All measurements are taken per CRMA specifications.

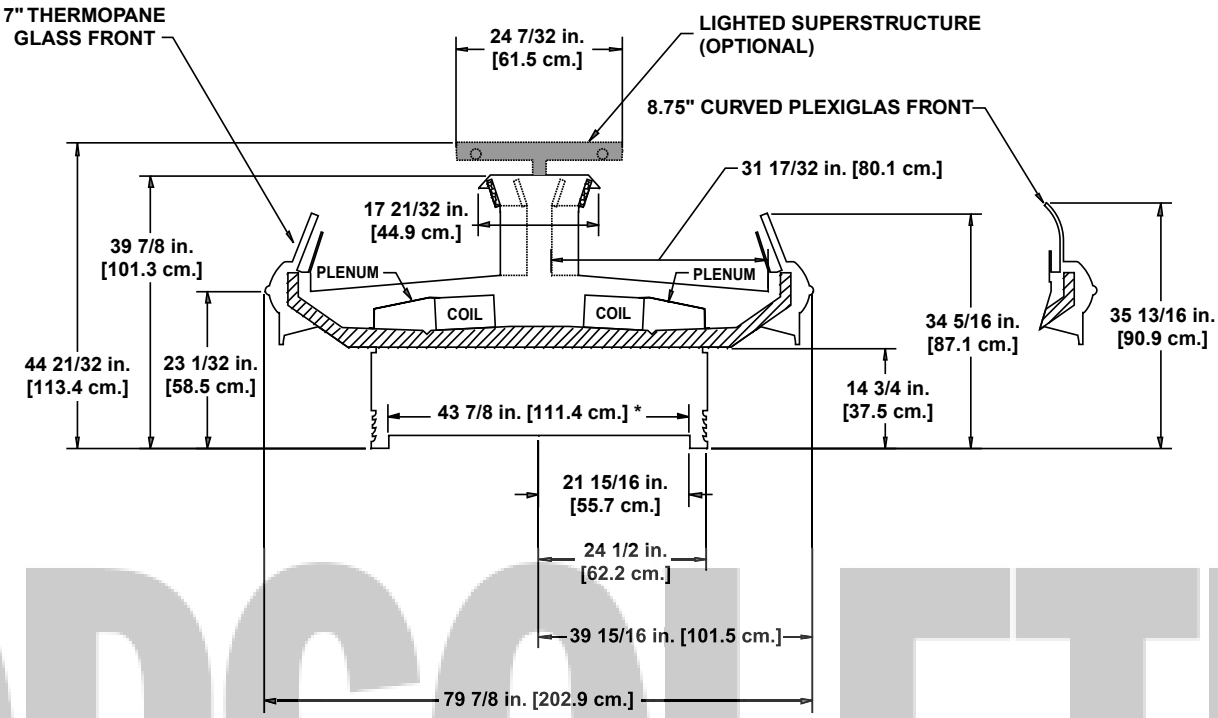

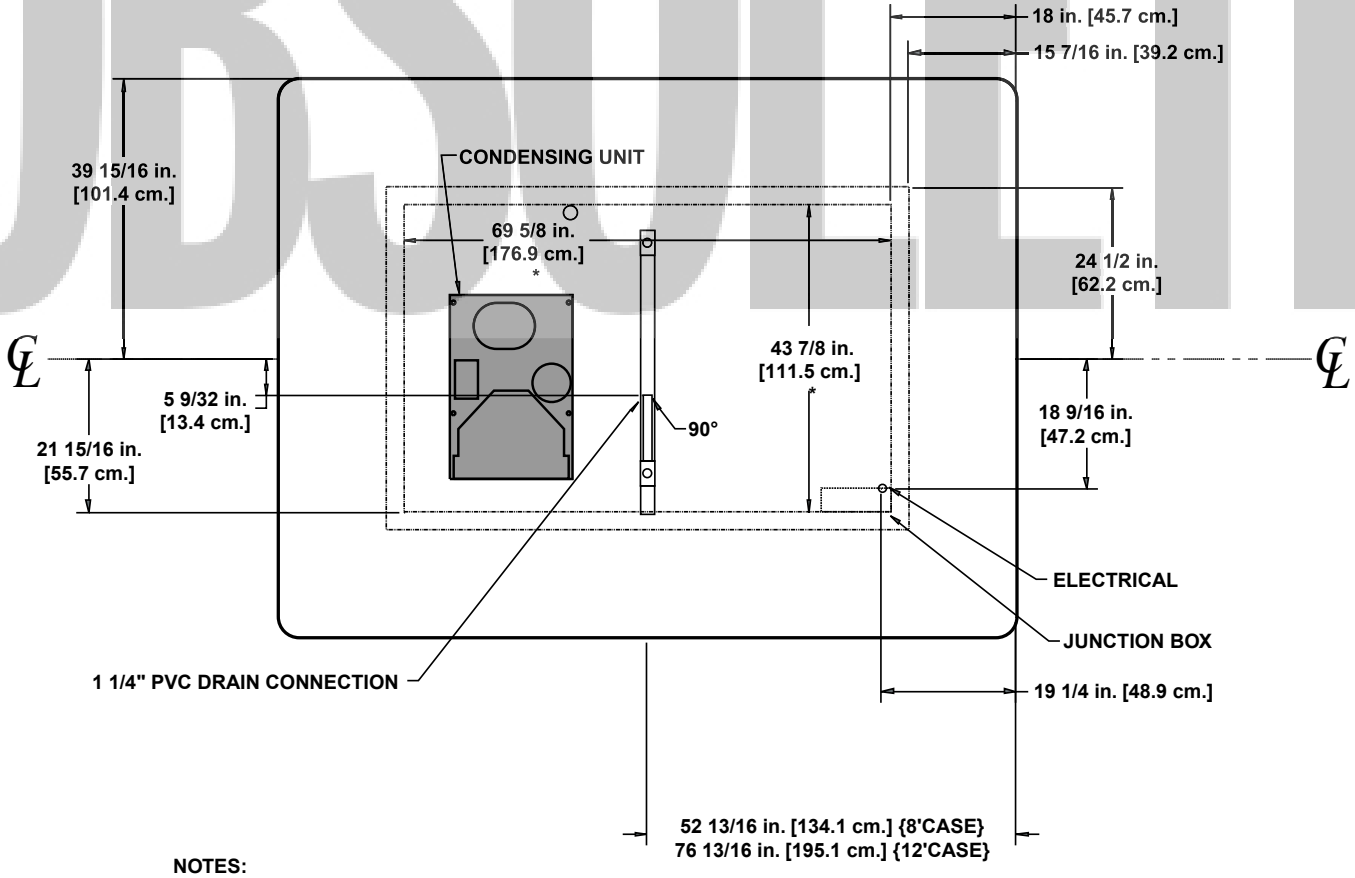

NOTES:

* STUB-UP AREA

• 12' CASES HAVE TWO CONDENSING UNITS

OBSOLETE

Wide Island Self-Contained Meat/Deli Merchandisers

OIM(B)A - 6' & 12' self-contained wide island single wraparound end

System Requirements

Model		Volts	Phase	Hz	Wire	Minimum Circuit Ampacity	Maximum Fuse Size
OIM(B)A	6'	208/230	1	60	3 wire + ground	19.4	25
	12'	208/230	1	60	3 wire + ground	31.1	35

Electrical Data

Model		Fans per Case	Standard Fans		High Efficiency Fans		Anti-Condensate Heaters		Defrost Heaters				Drain Heater		Maximum Lights	
			120 Volts		120 Volts		120 Volts		208 Volts		240 Volts		240 Volts		120 Volts	
			Amps	Watts	Amps	Watts	Amps	Watts	Amps	Watts	Amps	Watts	Amps	Watts	Amps	Watts
OIM(B)A	6'	4	1.36	76	0.60	44	0.57	68	3.25	676	3.75	900	5.55	1331	3.15	378
	12'	8	2.72	136	1.20	88	1.17	140	7.22	1502	8.33	2000	5.55	1331	5.87	704

OBSOLETE

Guidelines & Control Settings

Model	24 hr Energy Usage (kWh)	Suction Pressure @ Case Outlet (psig)	Superheat Set Point @ Bulb (°F)	Discharge Air (°F)	Average Product (°F)	Return Air (°F)	Discharge Air Velocity[1] (FPM)
OIM(B)A-6'		35	6-8	26	34	31	140
OIM(B)A-12'		35	6-8	26	34	31	140

[1] Average discharge air velocity at peak of defrost.

Condensing Unit Data

Model	Volts	Phase	Frequency (Hz)	HP	RLA[3] (amps)	LRA[4] (amps)	Refrig.	lbs of Refrig.	Max. Evap. Temp. (°F)	High Side Press. (psig)	Low Side Press. (psig)
OIM(B)A-6'	208-230	1	60	1	7.0	34.2	R22	8.2	45	360	215
OIM(B)A-12'[2]	208-230	1	60	1	7.0	34.2	R22	12.6	45	360	215

[2] This case uses two of the condensing units listed above.

[3] RLA - Running Load Amps.

[4] LRA - Locked Rotor Amps.

Defrost Controls

Model	Defrosts Per Day	Electric Defrost		Timed Off Defrost		Hot Gas Defrost		Reverse Air Defrost	
		Fail-safe (min)	Termination Temp. (°F)	Fail-safe (min)	Termination Temp. (°F)	Fail-safe (min)	Termination Temp. (°F)	Fail-safe (min)	Termination Temp. (°F)
OIM(B)A	3	40	42	- - - [5]	- - -	- - -	- - -	- - -	- - -

[5] NOTE: - - - not an option on this case model.

Medium Temperature Defrost Schedule

No. Per Day	Hours
1	12 midnight
2	12 am - 12 pm
3	6 am - 2 pm - 10 pm
4	12 - 6 am - 12 - 6 pm

Hill PHOENIX EXCELLENCE™

A DOVER DIVERSIFIED COMPANY

All measurements are taken per CRMA specifications.

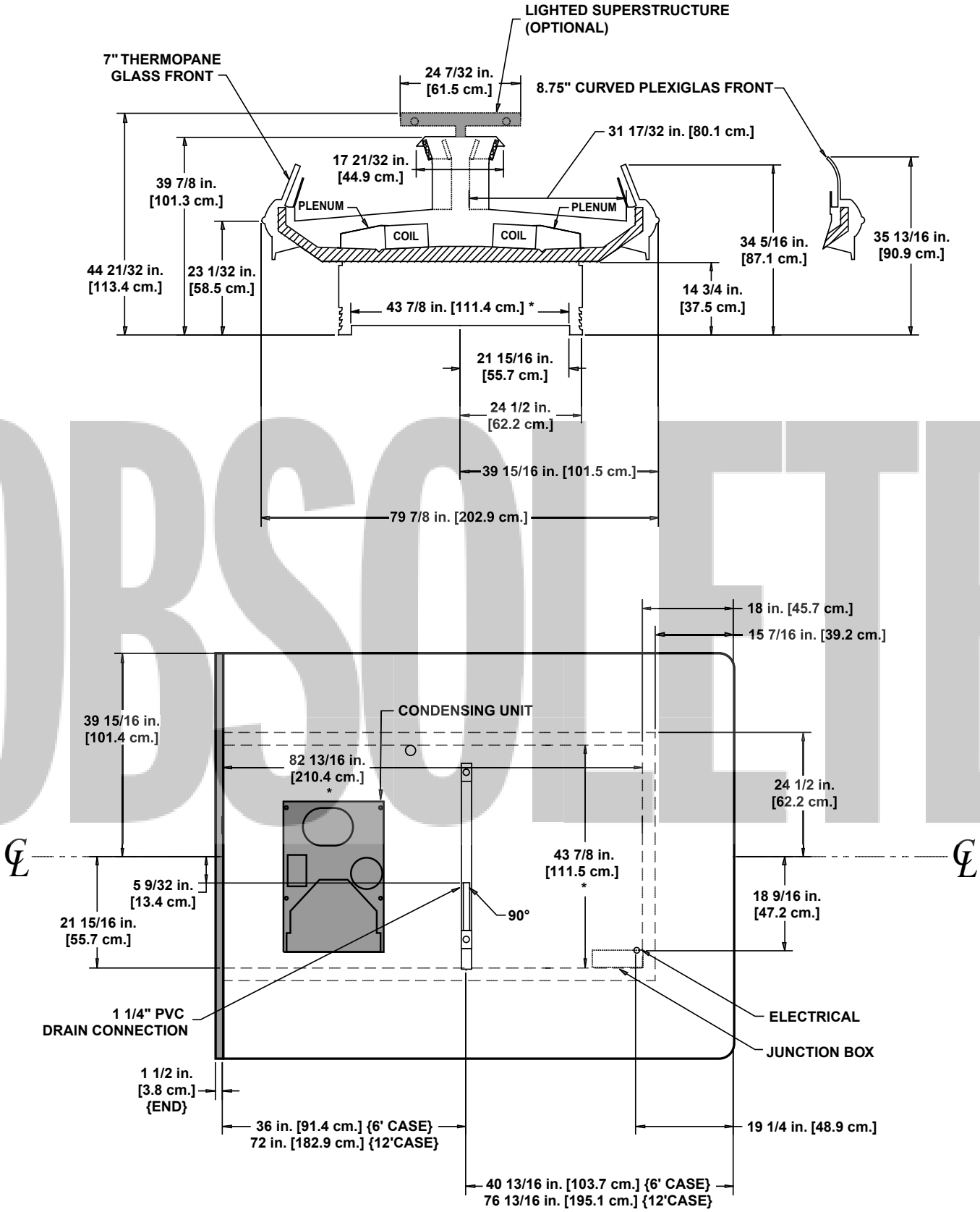

NOTES:

* STUB-UP AREA

• 12' CASES HAVE TWO CONDENSING UNITS

OBSOLETE

Narrow Island Self-Contained Meat/Deli Merchandisers

ONIMA - 8' & 12' self-contained wide island double wraparound end

System Requirements

Model		Volts	Phase	Hz	Wire	Minimum Circuit Ampacity	Maximum Fuse Size
ONIMA	8'	208/230	1	60	3 wire + ground	22.6	30
	12'	208/230	1	60	3 wire + ground	26.6	30

Electrical Data

Model		Fans per Case	Standard Fans		High Efficiency Fans		Anti-Condensate Heaters		Defrost Heaters				Drain Heater		Maximum Lights	
			120 Volts		120 Volts		120 Volts		208 Volts		240 Volts		240 Volts		120 Volts	
			Amps	Watts	Amps	Watts	Amps	Watts	Amps	Watts	Amps	Watts	Amps	Watts	Amps	Watts
ONIMA	8'	6	2.04	102	0.90	66	0.82	98	4.34	902	5.00	1200	5.55	1331	1.26	151
	12'	8	2.72	136	1.20	88	1.08	130	7.22	1502	8.33	2000	5.55	1331	1.46	175

OBSOLETE

Guidelines & Control Settings

Model	24 hr Energy Usage (kWh)	Suction Pressure @ Case Outlet (psig)	Superheat Set Point @ Bulb (°F)	Discharge Air (°F)	Average Product (°F)	Return Air (°F)	Discharge Air Velocity[1] (FPM)
ONIMA-8'		35	6-8	25	33	34	180
ONIMA-12'		35	6-8	25	33	34	180

[1] Average discharge air velocity at peak of defrost.

Condensing Unit Data

Model	Volts	Phase	Frequency (Hz)	HP	RLA[3] (amps)	LRA[4] (amps)	Refrig.	lbs of Refrig.	Max. Evap. Temp. (°F)	High Side Press. (psig)	Low Side Press. (psig)
ONIMA-8'	208-230	1	60	1	10.36	48.2	R22	8.2	45	360	215
ONIMA-12'[2]	208-230	1	60	1	7.0	34.2	R22	12.6	45	360	215

[2] This case uses two of the condensing units listed above.
[3] RLA - Running Load Amps.
[4] LRA - Locked Rotor Amps.

Defrost Controls

Model	Defrosts Per Day	Electric Defrost		Timed Off Defrost		Hot Gas Defrost		Reverse Air Defrost	
		Fail-safe (min)	Termination Temp. (°F)	Fail-safe (min)	Termination Temp. (°F)	Fail-safe (min)	Termination Temp. (°F)	Fail-safe (min)	Termination Temp. (°F)
ONIMA	3	35	47	- - -[5]	- - -	- - -	- - -	- - -	- - -

[5] NOTE: - - - not an option on this case model.

Medium Temperature Defrost Schedule

No. Per Day	Hours
1	12 midnight
2	12 am - 12 pm
3	6 am - 2 pm - 10 pm
4	12 - 6 am - 12 - 6 pm

Hill PHOENIX EXCELLENCE™

A DOVER DIVERSIFIED COMPANY

All measurements are taken per CRMA specifications.

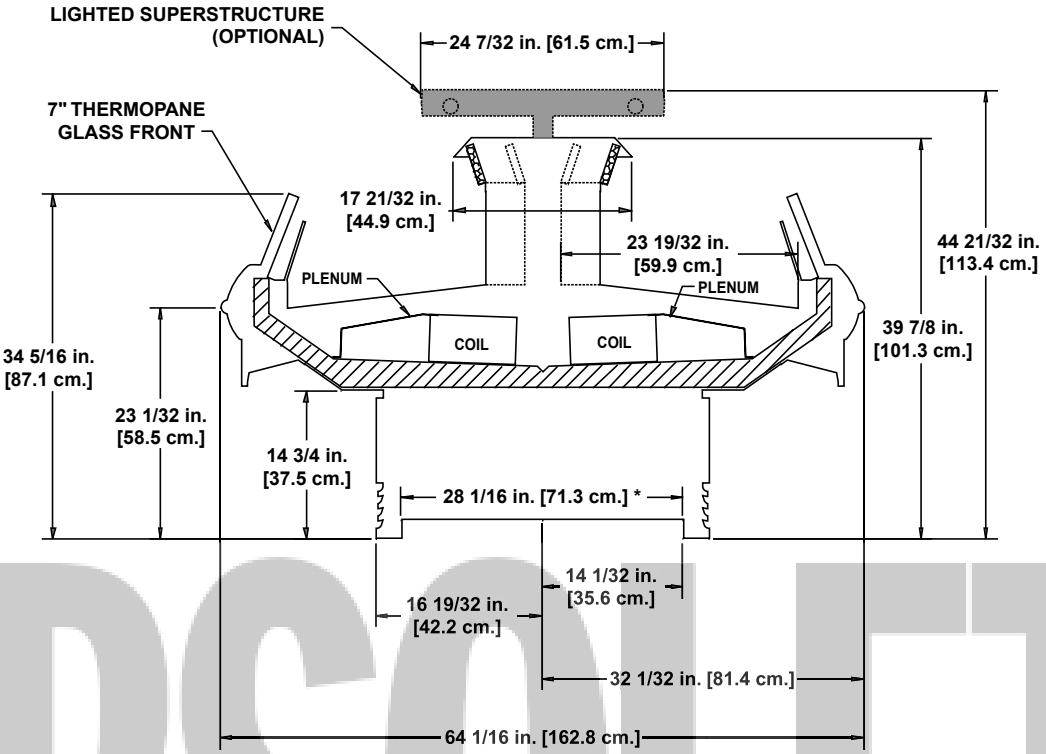

OBSOLETE

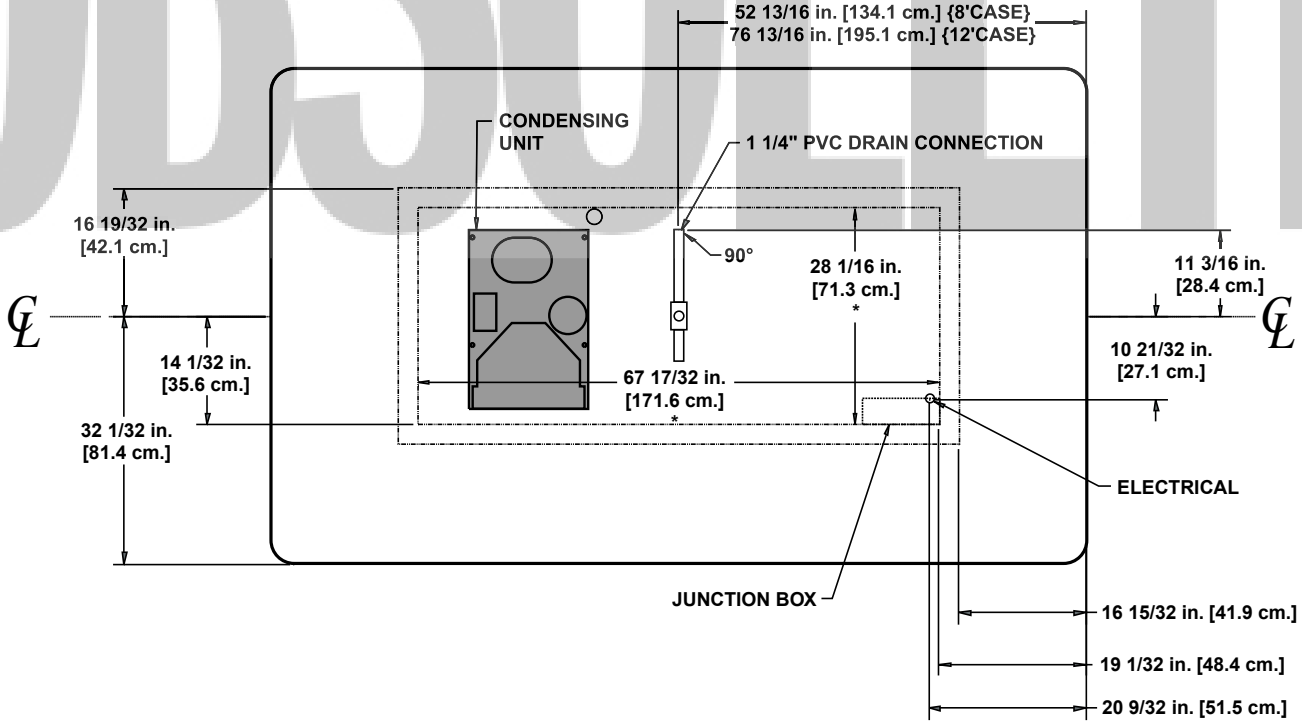

NOTES:

* STUB-UP AREA

• 12' CASES HAVE TWO CONDENSING UNITS

Narrow Island Self-Contained Meat/Deli Merchandisers

ONIM(B)A - 8' & 12' self-contained wide island single wraparound end

System Requirements

Model		Volts	Phase	Hz	Wire	Minimum Circuit Ampacity	Maximum Fuse Size
ONIM(B)A	8'	208/230	1	60	3 wire + ground	22.6	30
	12'	208/230	1	60	3 wire + ground	26.7	30

Electrical Data

Model		Fans per Case	Standard Fans		High Efficiency Fans		Anti-Condensate Heaters		Defrost Heaters				Drain Heater		Maximum Lights	
			120 Volts		120 Volts		120 Volts		208 Volts		240 Volts		240 Volts		120 Volts	
			Amps	Watts	Amps	Watts	Amps	Watts	Amps	Watts	Amps	Watts	Amps	Watts	Amps	Watts
ONIM(B)A	8'	6	2.04	102	0.90	66	0.75	90	4.34	902	5.00	1200	5.55	1331	1.26	151
	12'	8	2.72	136	1.20	88	1.17	140	7.22	1502	8.33	2000	5.55	1331	1.46	175

OBSOLETE

Guidelines & Control Settings

Model	24 hr Energy Usage (kWh)	Suction Pressure @ Case Outlet (psig)	Superheat Set Point @ Bulb (°F)	Discharge Air (°F)	Average Product (°F)	Return Air (°F)	Discharge Air Velocity[1] (FPM)
ONIM(B)A-8'		35	6-8	28	33	37	180
ONIM(B)A-12'		35	6-8	28	33	37	180

[1] Average discharge air velocity at peak of defrost.

Condensing Unit Data

Model	Volts	Phase	Frequency (Hz)	HP	RLA[3] (amps)	LRA[4] (amps)	Refrig.	lbs of Refrig.	Max. Evap. Temp. (°F)	High Side Press. (psig)	Low Side Press. (psig)
ONIM(B)A-8'	208-230	1	60	1	10.36	48.2	R22	8.2	45	360	215
ONIM(B)A-12'[2]	208-230	1	60	1	7.0	34.2	R22	12.6	45	360	215

[2] This case uses two of the condensing units listed above.

[3] RLA - Running Load Amps.

[4] LRA - Locked Rotor Amps.

Defrost Controls

Model	Defrosts Per Day	Electric Defrost		Timed Off Defrost		Hot Gas Defrost		Reverse Air Defrost	
		Fail-safe (min)	Termination Temp. (°F)	Fail-safe (min)	Termination Temp. (°F)	Fail-safe (min)	Termination Temp. (°F)	Fail-safe (min)	Termination Temp. (°F)
ONIM(B)A	3	35	47	- - - [5]	- - -	- - -	- - -	- - -	- - -

[5] NOTE: - - - not an option on this case model.

Medium Temperature Defrost Schedule

No. Per Day	Hours
1	12 midnight
2	12 am - 12 pm
3	6 am - 2 pm - 10 pm
4	12 - 6 am - 12 - 6 pm

Hill PHOENIX EXCELLENCE™

A DOVER DIVERSIFIED COMPANY

All measurements are taken per CRMA specifications.

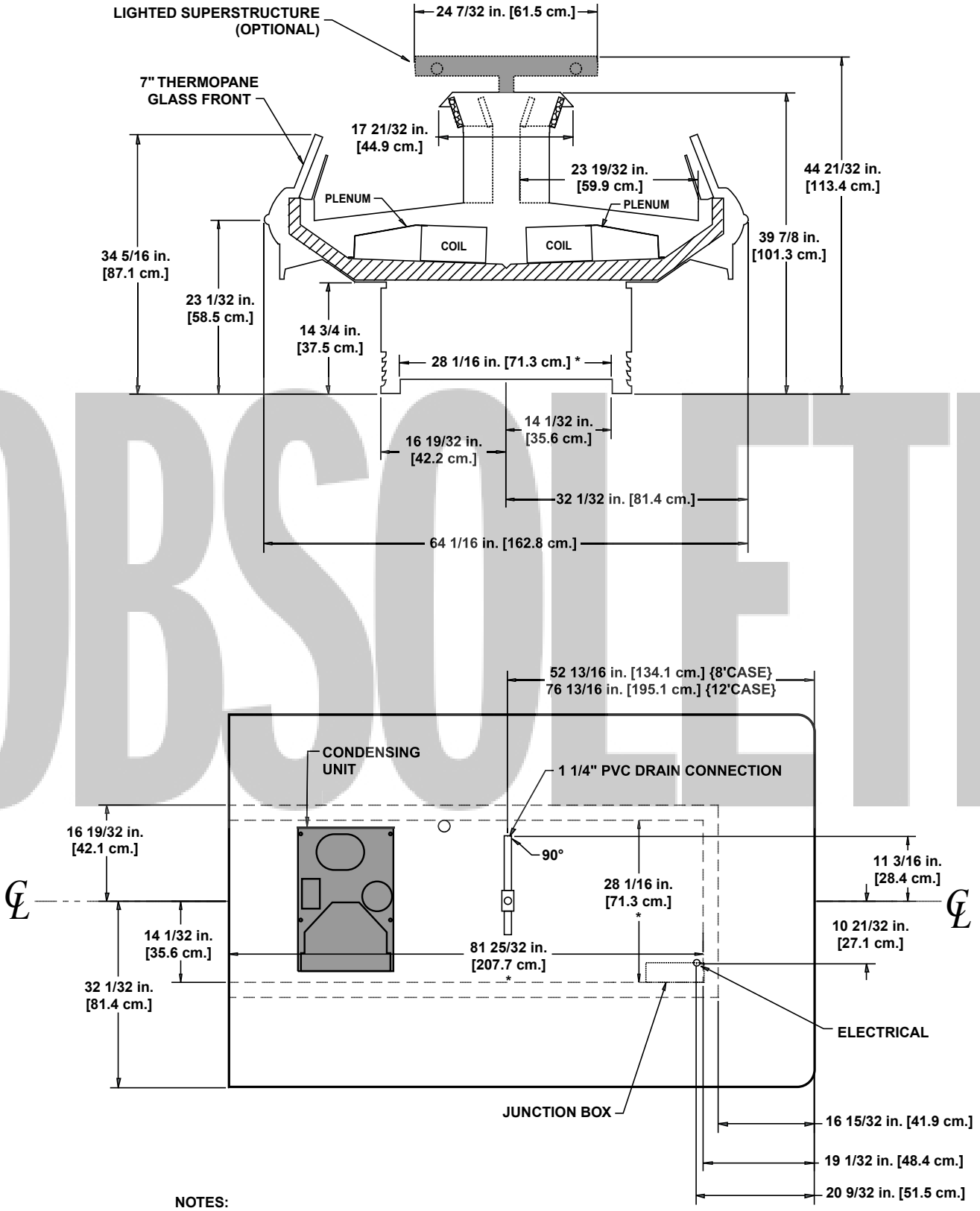

NOTES:

* STUB-UP AREA

• 12' CASES HAVE TWO CONDENSING UNITS

OBSOLETE

Wide Island Self-Contained Produce Merchandisers

OIPA - 8’ & 12’ self-contained wide island double wraparound end

System Requirements

Model		Volts	Phase	Hz	Wire	Minimum Circuit Ampacity	Maximum Fuse Size
OIPA	8’	208/230	1	60	3 wire + ground	20.0	25
	12’	208/230	1	60	3 wire + ground	35.0	40

Electrical Data

Model		Fans per Case	Standard Fans		High Efficiency Fans		Anti-Condensate Heaters		Defrost Heaters				Drain Heater		Maximum Lights	
			120 Volts		120 Volts		120 Volts		208 Volts		240 Volts		240 Volts		120 Volts	
			Amps	Watts	Amps	Watts	Amps	Watts	Amps	Watts	Amps	Watts	Amps	Watts	Amps	Watts
OIPA	8’	6	2.04	102	0.90	66	0.23	28	- - - [1]	- - -	- - -	- - -	5.55	1331	3.78	454
	12’	8	2.72	136	1.20	88	0.55	66	- - -	- - -	- - -	- - -	5.55	1331	5.04	605

[1] NOTE: - - - not an option on this case model.

OBSOLETE

Guidelines & Control Settings

Model	24 hr Energy Usage (kWh)	Suction Pressure @ Case Outlet (psig)	Superheat Set Point @ Bulb (°F)	Discharge Air (°F)	Average Product (°F)	Return Air (°F)	Discharge Air Velocity[2] (FPM)
OIPA-8’		45	6-8	34	40	48	140
OIPA-12’		45	6-8	34	40	48	140

[2] Average discharge air velocity at peak of defrost.

Condensing Unit Data

Model	Volts	Phase	Frequency (Hz)	HP	RLA[4] (amps)	LRA[5] (amps)	Refrig.	lbs of Refrig.	Max. Evap. Temp. (°F)	High Side Press. (psig)	Low Side Press. (psig)
OIPA-8’	208-230	1	60	1	6.7	33.5	R22	7.8	45	360	215
OIPA-12’[3]	208-230	1	60	3/4	9.4	48.2	R22	11.9	45	360	215

[3] This case uses two of the condensing units listed above.

[4] RLA - Running Load Amps.

[5] LRA - Locked Rotor Amps.

Defrost Controls

Model	Defrosts Per Day	Electric Defrost		Timed Off Defrost		Hot Gas Defrost		Reverse Air Defrost	
		Fail-safe (min)	Termination Temp. (°F)	Fail-safe (min)	Termination Temp. (°F)	Fail-safe (min)	Termination Temp. (°F)	Fail-safe (min)	Termination Temp. (°F)
OIPA	3	- - -	- - -	44	38	- - -	- - -	- - -	- - -

Medium Temperature Defrost Schedule

No. Per Day	Hours
1	12 midnight
2	12 am - 12 pm
3	6 am - 2 pm - 10 pm
4	12 - 6 am - 12 - 6 pm

Hill PHOENIX EXCELLENCE™

A DOVER DIVERSIFIED COMPANY

All measurements are taken per CRMA specifications.

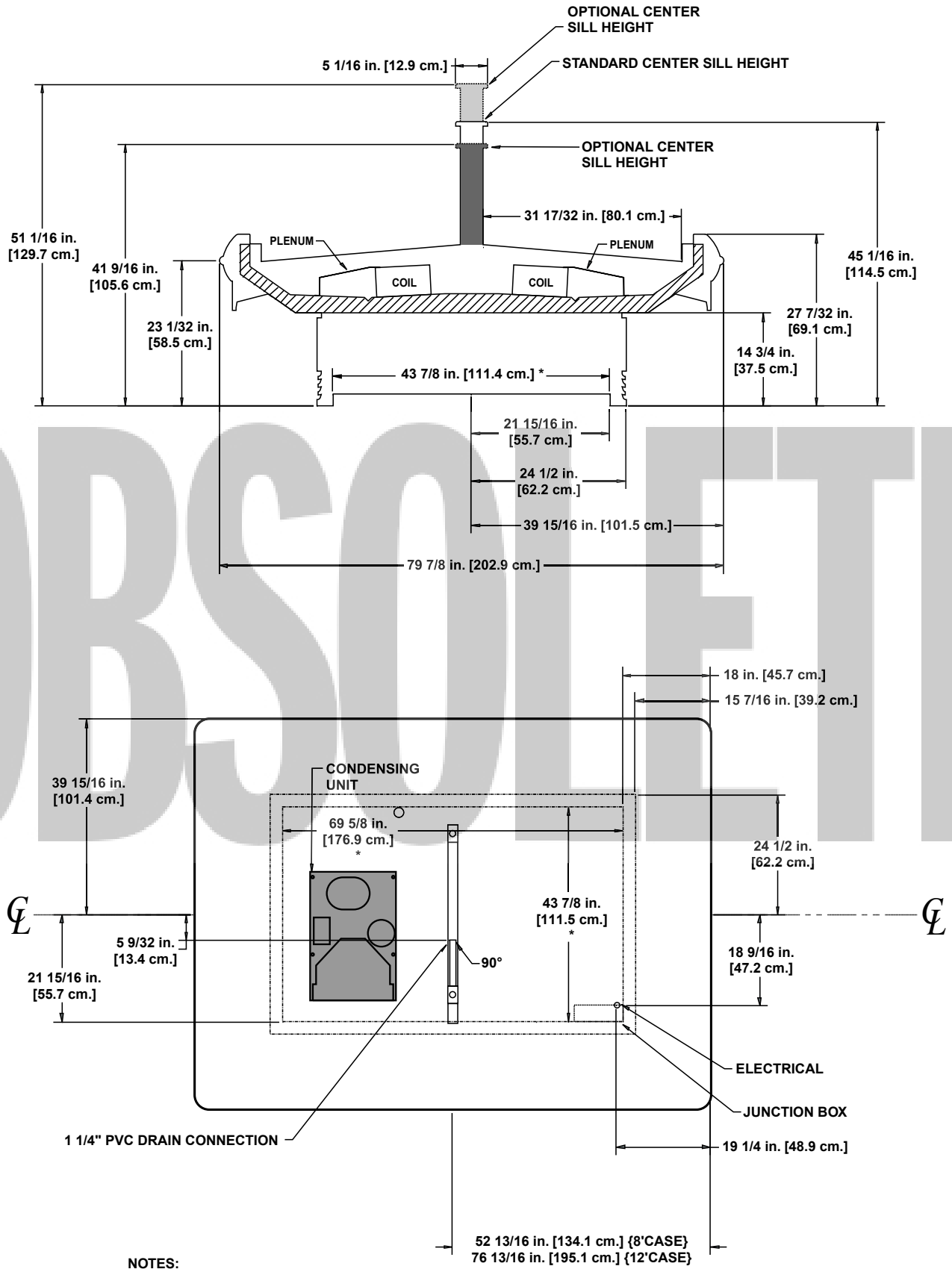

OBSOLETE

NOTES:

* STUB-UP AREA

• 12' CASES HAVE TWO CONDENSING UNITS

Wide Island Self-Contained Multi-Deck Cheese Merchandisers

O3ICA - 8' & 12' self-contained wide island double wraparound end

System Requirements

Model		Volts	Phase	Hz	Wire	Minimum Circuit Ampacity	Maximum Fuse Size
O3ICA	8'	208/230	1	60	3 wire + ground	27.1	35
	12'	208/230	1	60	3 wire + ground	32.6	35

Electrical Data

Model		Fans per Case	Standard Fans		High Efficiency Fans		Anti-Condensate Heaters		Defrost Heaters				Drain Heater		Maximum Lights	
			120 Volts		120 Volts		120 Volts		208 Volts		240 Volts		240 Volts		120 Volts	
			Amps	Watts	Amps	Watts	Amps	Watts	Amps	Watts	Amps	Watts	Amps	Watts	Amps	Watts
O3ICA	8'	6	2.04	102	0.90	66	0.82	98	4.34	902	5.00	1200	5.55	1331	5.71	546
	12'	8	2.72	136	1.20	88	1.08	130	7.22	1502	8.33	2000	5.55	1331	7.46	779

OBSOLETE

Guidelines & Control Settings

Model	24 hr Energy Usage (kWh)	Suction Pressure @ Case Outlet (psig)	Superheat Set Point @ Bulb (°F)	Discharge Air (°F)	Average Product (°F)	Return Air (°F)	Discharge Air Velocity[1] (FPM)
O3ICA-8'		37	6-8	29	37	48	160
O3ICA-12'		37	6-8	29	37	48	160

[1] Average discharge air velocity at peak of defrost.

Condensing Unit Data

Model	Volts	Phase	Frequency (Hz)	HP	RLA[3] (amps)	LRA[4] (amps)	Refrig.	lbs of Refrig.	Max. Evap. Temp. (°F)	High Side Press. (psig)	Low Side Press. (psig)
O3ICA-8'	208-230	1	60	1	10.36	48.2	R22	8.2	45	360	215
O3ICA-12'[2]	208-230	1	60	1	7.0	34.2	R22	12.6	45	360	215

[2] This case uses two of the condensing units listed above.

[3] RLA - Running Load Amps.

[4] LRA - Locked Rotor Amps.

Defrost Controls

Model	Defrosts Per Day	Electric Defrost		Timed Off Defrost		Hot Gas Defrost		Reverse Air Defrost	
		Fail-safe (min)	Termination Temp. (°F)	Fail-safe (min)	Termination Temp. (°F)	Fail-safe (min)	Termination Temp. (°F)	Fail-safe (min)	Termination Temp. (°F)
O3ICA	6	30	55	- - - [5]	- - -	- - -	- - -	- - -	- - -

[5] NOTE: - - - not an option on this case model.

Medium Temperature Defrost Schedule

No. Per Day	Hours
1	12 midnight
2	12 am - 12 pm
3	6 am - 2 pm - 10 pm
4	12 - 6 am - 12 - 6 pm

Hill PHOENIX EXCELLENCE™

A DOVER DIVERSIFIED COMPANY

All measurements are taken per CRMA specifications.

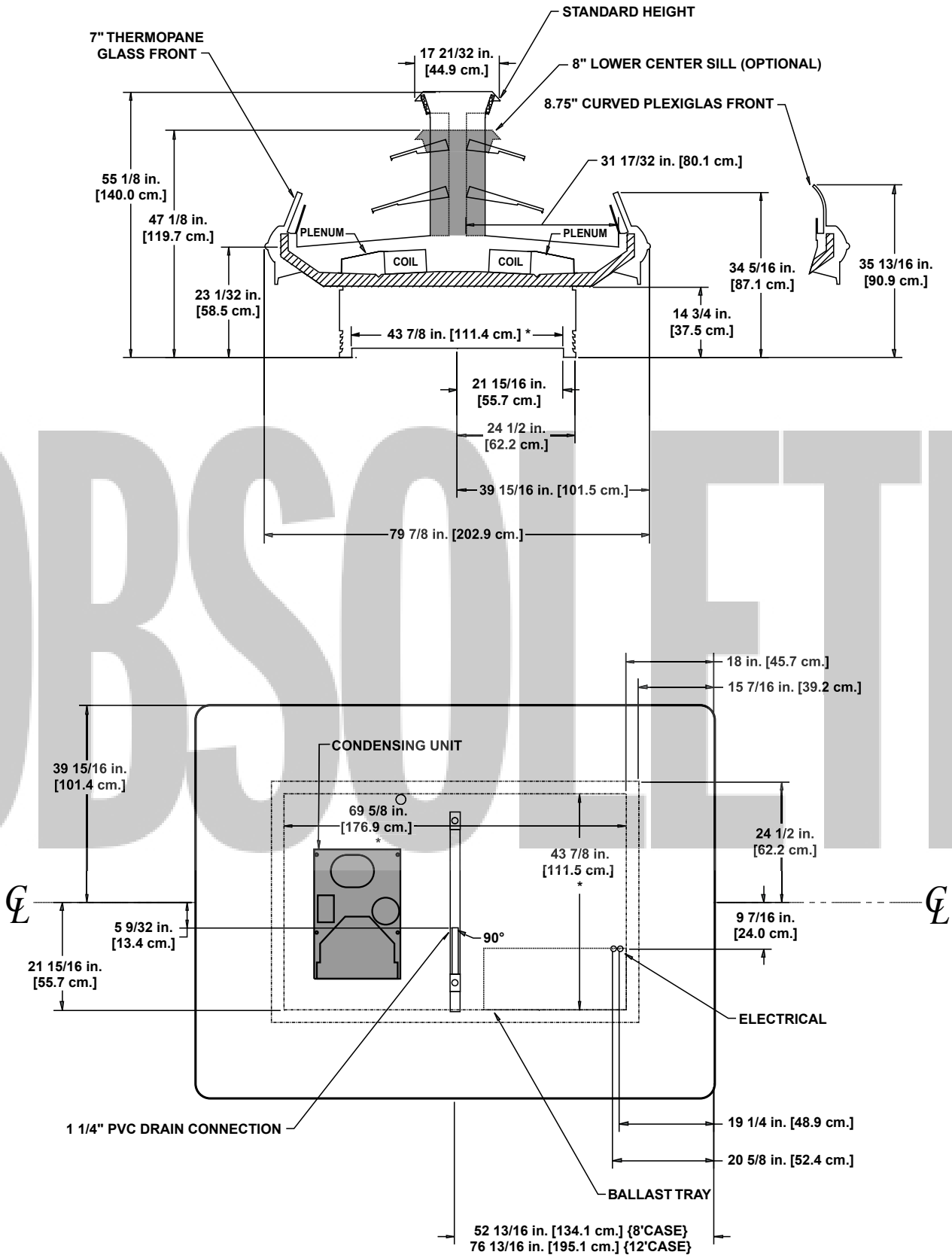

OBSOLETE

NOTES:

* STUB-UP AREA

• 12' CASES HAVE TWO CONDENSING UNITS

Wide Island Self-Contained Multi-Deck Cheese Merchandisers

O3IC(B)A - 8' & 12' self-contained wide island single wraparound end

System Requirements

Model		Volts	Phase	Hz	Wire	Minimum Circuit Ampacity	Maximum Fuse Size
O3IC(B)A	8'	208/230	1	60	3 wire + ground	26.1	35
	12'	208/230	1	60	3 wire + ground	31.2	35

Electrical Data

Model		Fans per Case	Standard Fans		High Efficiency Fans		Anti-Condensate Heaters		Defrost Heaters				Drain Heater		Maximum Lights	
			120 Volts		120 Volts		120 Volts		208 Volts		240 Volts		240 Volts		120 Volts	
			Amps	Watts	Amps	Watts	Amps	Watts	Amps	Watts	Amps	Watts	Amps	Watts	Amps	Watts
O3IC(B)A	8'	6	2.04	102	0.90	66	0.75	90	4.34	902	5.00	1200	5.55	1331	4.76	514
	12'	8	2.72	136	1.20	88	1.17	140	7.22	1502	8.33	2000	5.55	1331	6.02	665

OBSOLETE

Guidelines & Control Settings

Model	24 hr Energy Usage (kWh)	Suction Pressure @ Case Outlet (psig)	Superheat Set Point @ Bulb (°F)	Discharge Air (°F)	Average Product (°F)	Return Air (°F)	Discharge Air Velocity[1] (FPM)
O3IC(B)A-8'		37	6-8	29	37	48	160
O3IC(B)A-12'		37	6-8	29	37	48	160

[1] Average discharge air velocity at peak of defrost.

Condensing Unit Data

Model	Volts	Phase	Frequency (Hz)	HP	RLA[3] (amps)	LRA[4] (amps)	Refrig.	lbs of Refrig.	Max. Evap. Temp. (°F)	High Side Press. (psig)	Low Side Press. (psig)
O3IC(B)A-8'	208-230	1	60	1	10.36	48.2	R22	8.2	45	360	215
O3IC(B)A-12'[2]	208-230	1	60	1	7.0	34.2	R22	12.6	45	360	215

[2] This case uses two of the condensing units listed above.
[3] RLA - Running Load Amps.
[4] LRA - Locked Rotor Amps.

Defrost Controls

Model	Defrosts Per Day	Electric Defrost		Timed Off Defrost		Hot Gas Defrost		Reverse Air Defrost	
		Fail-safe (min)	Termination Temp. (°F)	Fail-safe (min)	Termination Temp. (°F)	Fail-safe (min)	Termination Temp. (°F)	Fail-safe (min)	Termination Temp. (°F)
O3IC(B)A	6	30	55	- - - [5]	- - -	- - -	- - -	- - -	- - -

[5] NOTE: - - - not an option on this case model.

Medium Temperature Defrost Schedule

No. Per Day	Hours
1	12 midnight
2	12 am - 12 pm
3	6 am - 2 pm - 10 pm
4	12 - 6 am - 12 - 6 pm

Hill PHOENIX EXCELLENCE™

A DOVER DIVERSIFIED COMPANY

All measurements are taken per CRMA specifications.

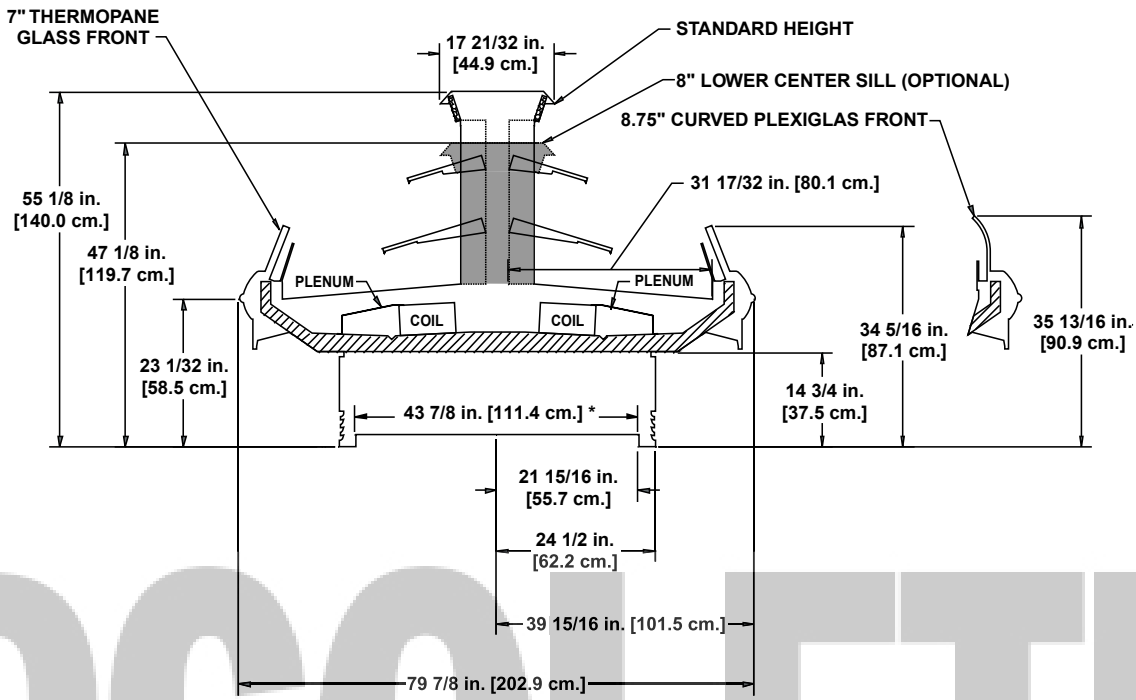

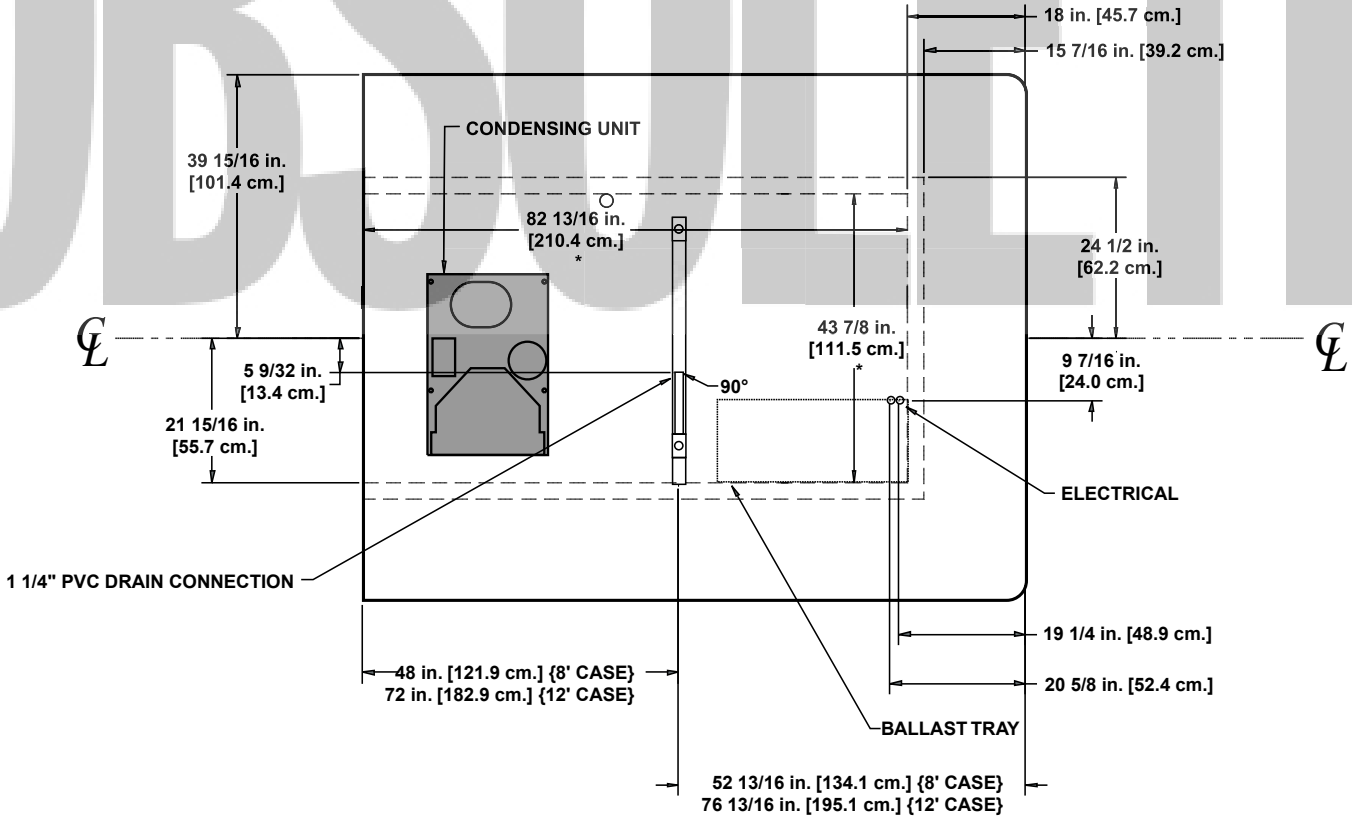

OBSOLETE

NOTES:

* STUB-UP AREA

• 12' CASES HAVE TWO CONDENSING UNITS

International Style Deli/Seafood Self-Contained Mobile Merchandisers

OSIA-4' - full service mobile self-contained deli/seafood

System Data

Model	Volts	Phase	Hz	Plug Style	Cord Length
OSIA-4'	120	1	60	NEMA 5L20	10 ft

Guidelines & Control Settings

Model	24 hr Energy Usage (kWh)	Suction Pressure @ Case Outlet (psig)	Superheat Set Point @ Bulb (°F)	Discharge Air (°F)	Average Product (°F)	Return Air (°F)	Discharge Air Velocity[1] (FPM)
OSIA-4'		12-14	6-8	26	33	34	

[1] Average discharge air velocity at peak of defrost.

OBSOLETE

Condensing Unit Data

Model	Volts	Phase	Frequency (Hz)	HP	RLA[2] (amps)	LRA[3] (amps)	Refrig.	lbs of Refrig.	Max. Evap. Temp. (°F)	High Side Press. (psig)	Low Side Press. (psig)
OSIA-4'	115	1	60	1/3	8.9	48.0	R134A	2.25	45	440	162

[2] RLA - Running Load Amps.
[3] LRA - Locked Rotor Amps.

Defrost Controls

Model	Defrosts Per Day	Electric Defrost		Timed Off Defrost		Hot Gas Defrost		Reverse Air Defrost	
		Fail-safe (min)	Termination Temp. (°F)	Fail-safe (min)	Termination Temp. (°F)	Fail-safe (min)	Termination Temp. (°F)	Fail-safe (min)	Termination Temp. (°F)
OSIA-4'	2	45	47	- - -[4]	- - -	- - -	- - -	- - -	- - -

[4] NOTE: - - - not an option on this case model.

Medium Temperature Defrost Schedule

No. Per Day	Hours
1	12 midnight
2	12 am - 12 pm
3	6 am - 2 pm - 10 pm
4	12 - 6 am - 12 - 6 pm

All measurements are taken per CRMA specifications.

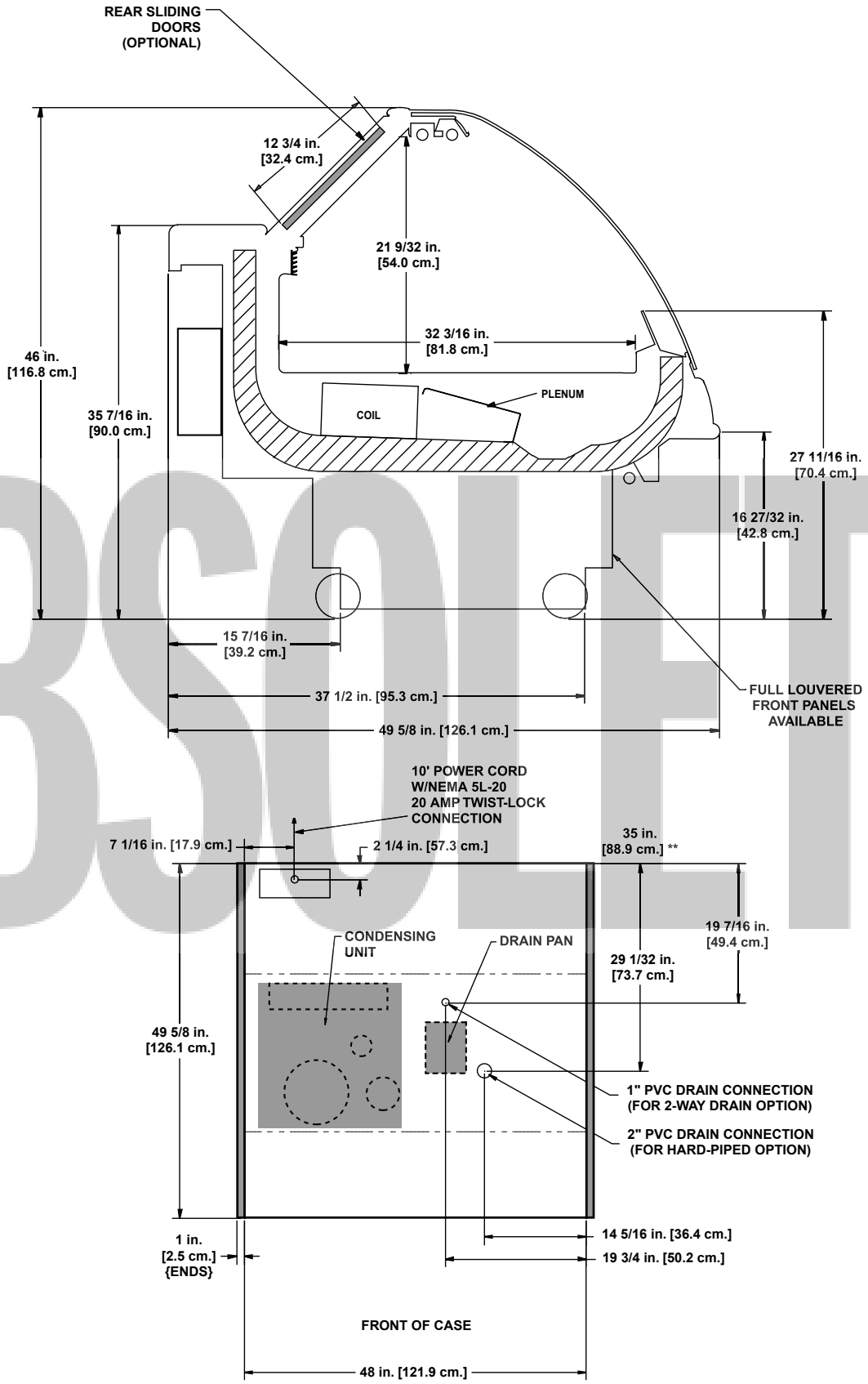

NOTE:

ENDS ADD APPROXIMATELY 1 INCH TO CASE HEIGHT

OBSOLETE

Index

MMCA-4' 166-167
O2UM 24-27
O2.5UM 28-33
O2.5UMA-4' 174-175
O3IC 116-118
O3ICA 162-163
O3IC(B) 116, 119-120
O3IC(B)A 196-197
O3IP 122-123
O3IP(B) 122, 124
O3UM 34-37
O3UMA-4' 176-177
O3.5UM 38-41
O4UM 42-44
O5DM 54-59
O5DMA 178-180
O5DMH 62-63
O5DR 50-52
O5UM 46-48
O5Z 64-65
OC 2-3
OGM 138-140
OHM 66-67
OHMH 70-71
OHP 72-73
OHPH 74-75
OIM 94-95
OIMA 186-187
OIM(B) 94, 96
OIM(B)A 188-189
OIM(BB) 94, 97
OIP 102-103
OIPA 194-195
OIP(B) 102, 104
OIP(BB) 102, 105
OIZ 110-111
OLF 152-154
OLFG 156-158
OM 4-6
OMZ 8-9
OMZD 10-11
ON5DM 60-61
ONHM 68-69
ONIM 98-99
ONIMA 190-191
ONIM(B) 98, 100
ONIM(B)A 192-193
ONIZ 112-113
ONIZ(G) 112, 114
ONRB 84-85
ONRZ 88-89
ONU 76-77
ONUA 182-184
OP 12-14
ORB 82-83
ORDR 78-80
ORZ 86-87
ORZH 90-91
OSA 126-129
OSAG 134-137
OSAH 160-161
OSI 142-144
OSIA-4' 200-201
OSIF 148-150
OSIH 162-163
OSIO 16-18
OSIOA-4' 168-169
OSIOPA-4' 170-171
OSIOZA-4' 172-173
OSM 130-132
OWEZ 108-109
OWEZ(G) 108-109
OWIZ 106-107
OWIZ(G) 106-107
OWSI 146-147
OWSIO 20-21

OBSOLETE

OBSOLETE

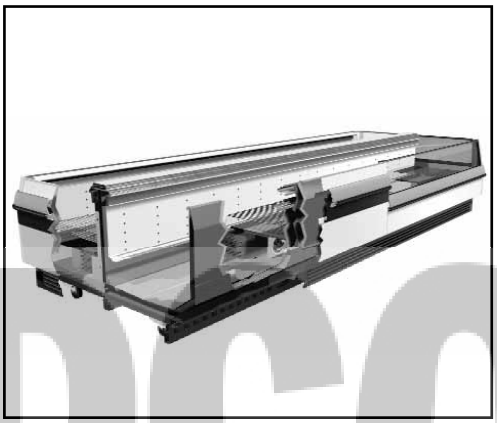

OBSOLETE

804-526-4455

Hill PHOENIX™
EXCELLENCE

A DOVER DIVERSIFIED COMPANY

1925 Ruffin Mill Road, Colonial Heights, VA 23834 • 709 Sigman Road, Conyers, GA 30013 • 1258 Quarry Lane, Suite G, Pleasanton, CA 94566 • 3601Walnut Avenue, Chino, CA 91710

Due to our commitment to continuous improvement all specifications are subject to change without notice.

Hill PHOENIX is a Sustaining Member of the American Society of Quality.

Visit our web site at www.hillphoenix.com

ASH9950