Hill PHOENIX
EXCELLENCE®

Merchandisers

Engineering

Reference

Manual

2007

A DOVER™ COMPANY

6/07

Welcome to the 2007 Merchandisers Engineering Reference Manual. This manual is designed to provide you with cross-sections, footprints and technical data for all of our current production models. This manual is divided into sections based on design considerations which put similar case models together (single deck merchandisers, multi-deck merchandisers, reach-in merchandisers, etc.). This makes it easy to find just the right case to fit your new, or existing, store layout. The table of contents lists our cases by design application giving you the ability to see which cases are available for specific functions. The index at the back of this manual lists the cases in alphabetical order, allowing you to find a specific case model at a glance.

This entire manual is posted to our web site at www.hillphoenix.com in the Information Center. Any new cases that are released during the year or any revisions to technical information on our current cases will be posted to our web site. If you have questions about our display merchandisers or need more information please contact one of our Sales Representatives. The phone number and address for our Colonial Heights facility is listed on the back cover of this manual and further contact information is available on our web site.

New Case Models Added

Multi-Deck Merchandisers
ONN35UA Page 114

Reach-In Merchandisers
ORIZ Page 244
ORIZH Page 246
RBH Page 248
RZH Page 250
RIZH Page 252

Single Deck Island Merchandisers
ONIP Page 272
ONIZGG Page 288

Multi-Deck Island Merchandisers
ON3IM Page 300

Service Merchandisers
OSGF Page 324
CUBNH Page 404
CUBN Page 406
CUBW Page 408
CUBD Page 410

iii

Table of Contents

Merchandisers by Design Application

Single Deck Merchandisers 1

Single Deck Produce Merchandiser (MPC) 2
Single Deck Deli/Cheese Merchandiser (OC) 4
Single Deck Deli/Meat/Seafood Merchandiser (OM) 6
Narrow Single Deck Frozen Meat Merchandiser (ONMZ) 8
Single Deck Frozen Meat Merchandiser (OMZ) 10
Single Deck Frozen Food/Ice Cream Merchandiser (OMZD) 12
Narrow Single Deck Produce Merchandiser (ONP) 14
Single Deck Produce Merchandiser (OP) 16
Single Deck Self-Contained Produce Merchandiser (OPA) 18
Wide Single Deck Produce Merchandiser (OWP) 20
Wide Single Deck Self-Contained Produce Merchandiser (OWPA) 22

Utility Merchandisers 25

Narrow Multi-Deck Dome Deli Merchandiser (ONUMD) 26
Narrow Multi-Deck Produce/Dairy/Deli/Meat/Seafood Merchandiser (ONUM) 28
Multi-Deck Produce/Dairy/Deli/Meat/Seafood Merchandiser (OUM) 32
Narrow Multi-Deck Produce/Dairy/Deli/Meat/Seafood Merchandiser (ON2UM) 36
Multi-Deck Produce/Dairy/Deli/Meat/Seafood Merchandiser (O2UM) 40
Wide Multi-Deck Produce/Dairy/Deli Merchandiser (OW2UM) 44
Narrow Multi-Deck Produce/Dairy/Deli/Meat/Seafood Merchandiser (ON2.5UM) 46
Multi-Deck Produce/Dairy/Deli/Meat/Seafood Merchandiser (O2.5UM) 50
Multi-Deck Self-Contained Produce/Dairy/Deli/Meat/Seafood Merchandiser (O2.5UMA) 54
Multi-Deck Produce/Dairy/Deli/Meat/Seafood Merchandiser (O2.75UM) 56
Multi-Deck Frozen Food Merchandiser (O2.75MZD) 60
Narrow Multi-Deck Produce/Dairy/Deli/Meat/Seafood Merchandiser (ON3UM) 62
Multi-Deck Produce/Dairy/Deli/Meat/Seafood Merchandiser (O3UM) 66
Wide Multi-Deck Produce/Dairy/Deli Merchandiser (OW3UM) 70
Multi-Deck Produce/Dairy/Deli Merchandiser (O3UD) 72
Narrow Multi-Deck Produce/Dairy/Deli/Meat/Seafood Merchandiser (ON3.5UM) 74
Multi-Deck Produce/Dairy/Deli/Meat/Seafood Merchandiser (O3.5UM) 78
Multi-Deck Produce/Dairy/Deli Merchandiser (O3.5UD) 82
Narrow Multi-Deck Produce/Dairy/Deli Merchandiser (ON4UM) 84
Multi-Deck Produce/Dairy/Deli Merchandiser (O4UM) 88
Narrow Multi-Deck Produce/Dairy/Deli Merchandiser (ON5UM) 92
Multi-Deck Produce/Dairy/Deli Merchandiser (O5UM) 96
Narrow Multi-Deck Produce/Dairy/Deli Merchandiser (ON6UM) 100
Multi-Deck Produce/Dairy/Deli Merchandiser (O6UM) 104

Multi-Deck Merchandisers 109

Multi-Deck Deli Back Bar Merchandiser (BB) 110
Narrow Multi-Deck Deli Merchandiser (ONN35U) 112
Narrow Multi-Deck Deli Merchandiser (ONN35UA) 114
Narrow Multi-Deck Deli Merchandiser (ONN5U) 116

Multi-Deck Merchandisers (Continued) 109
Narrow Multi-Deck Produce/Dairy Merchandiser (ON5DM) 118
Narrow Multi-Deck Self-Contained Produce/Dairy Merchandiser (ON5DMA) 120
High Narrow Multi-Deck Produce/Dairy Merchandiser (ON5DMH) 122
Multi-Deck Produce/Dairy/Deli Merchandiser (O5DM) 124
Multi-Deck Self-Contained Produce/Dairy/Deli Merchandiser (O5DMA) 126
High Multi-Deck Produce/Dairy/Deli Merchandiser (O5DMH) 128
Multi-Deck Rear Load Dairy Merchandiser (O5DR) 130
High Multi-Deck Rear Load Dairy Merchandiser (O5DRH) 132
Multi-Deck Deli/Meat Merchandiser (O5M) 134
Multi-Deck Rear Load Deli/Meat Merchandiser (O5MR) 136
Multi-Deck Frozen Food Merchandiser (O5Z) 138
Narrow Multi-Deck Deli/Meat Merchandiser (ONHM) 140
High Narrow Multi-Deck Deli/Meat Merchandiser (ONHMH) 142
Multi-Deck Meat Merchandiser (OHM) 144
High Multi-Deck Deli/Meat Merchandiser (OHMH) 148
Narrow Multi-Deck Produce Merchandiser (ONHP) 152
High Narrow Multi-Deck Produce Merchandiser (ONHPH) 154
Multi-Deck Produce Merchandiser (OHP) 156
High Multi-Deck Produce Merchandiser (OHPH) 158
Wide Multi-Deck Produce Merchandiser (OWHP) 160
High Wide Multi-Deck Produce Merchandiser (OWHPH) 162
Narrow Multi-Deck Dairy Merchandiser (ONN) 164
Narrow Multi-Deck Self-Contained Dairy Merchandiser (ONNA) 166
Narrow Multi-Deck Produce/Dairy/Deli/Meat Merchandiser (ONU) 168
Narrow Multi-Deck Self-Contained Produce/Dairy/Deli/Meat Merchandiser (ONUA) 170
Roll-In Rear Load Dairy Merchandiser (ORDR) 172

End Cap Merchandisers 175
Narrow Single Deck Frozen Meat End Cap Merchandiser (ONEMZ) 176
Single Deck Deli/Meat End Cap Merchandiser (OEM) 180
Narrow Multi-Deck Deli/Meat End Cap Merchandiser (ON3EM) 184
Multi-Deck Deli/Meat End Cap Merchandiser (O3EM) 188
Narrow Multi-Deck Deli/Meat End Cap Merchandiser (ON3.5EM) 192
Multi-Deck Deli/Meat End Cap Merchandiser (O3.5EM) 196
Narrow Multi-Deck Deli End Cap Merchandiser (ON4EM) 200
Narrow Multi-Deck Deli End Cap Merchandiser (ON5EM) 204
Single Deck Bulk Produce End Cap Merchandiser (OEP) 208
Narrow Multi-Deck Bulk Produce End Cap Merchandiser (ON3EP) 212
Multi-Deck Bulk Produce End Cap Merchandiser (O3EP) 216

Reach-In Door Merchandisers 221
Narrow Glass Door Reach-In Beverage Merchandiser (ONRB) 222
High Narrow Glass Door Reach-In Beverage Merchandiser (ONRBH) 224

Reach-In Door Merchandisers (Continued) 221
Glass Door Reach-In Beverage Merchandiser (ORB) 226
Glass Door Reach-In Rear Load Beverage Merchandiser (ORBR) 228
High Glass Door Reach-In Beverage Merchandiser (ORBH) 230
Narrow Glass Door Reach-In Frozen Food/Ice Cream Merchandiser (ONRZ) 232
High Narrow Glass Door Reach-In Frozen Food/Ice Cream Merchandiser (ONRZH) 234
Glass Door Reach-In Frozen Food/Ice Cream Merchandiser (ORZ) 236
High Glass Door Reach-In Frozen Food/Ice Cream Merchandiser (ORZH) 238
Narrow Glass Door Reach-In Back-to-Back Frozen Food/Ice Cream Merchandiser (ONRIZ) 240
High Narrow Glass Door Reach-In Back-to-Back Frozen Food/Ice Cream Merchandiser (ONRIZH) 242
Glass Door Reach-In Back-to-Back Frozen Food/Ice Cream Merchandiser (ORIZ) 244
High Glass Door Reach-In Back-to-Back Frozen Food/Ice Cream Merchandiser (ORIZH) 246
Glass Door Reach-In Beverage Merchandiser (RBH) 248
Glass Door Reach-In Frozen Food/Ice Cream Merchandiser (RZH) 250
Glass Door Reach-In Back-to-Back Frozen Food/Ice Cream Merchandiser (RIZH) 252

Single Deck Island Merchandisers 255
Narrow Island Deli/Meat Merchandiser (ONIM) 256
Narrow Island Self-Contained Deli/Meat Merchandiser (ONIMA) 260
Narrow Island Self-Contained Deli/Meat Merchandiser (ONIMBA) 262
Wide Island Deli/Meat Merchandiser (OIM) 264
Wide Island Self-Contained Deli/Meat Merchandiser (OIMA) 268
Wide Island Self-Contained Deli/Meat Merchandiser (OIMBA) 270
Narrow Island Bulk Produce Merchandiser (ONIP) 272
Wide Island Bulk Produce Merchandiser (OIP) 276
Wide Island Self-Contained Bulk Produce Merchandiser (OIPA) 280
Narrow Single Deck Frozen Food/Ice Cream Merchandiser (ONZ) 282
Narrow Island Frozen Food/Ice Cream Merchandiser (ONIZ) 284
Narrow Island Frozen Food Merchandiser (ONIZGG) 288
Island Frozen Food Merchandiser (OIZ) 290
Wide Island Frozen Food/Ice Cream Merchandiser (OWIZ) 292
Wide Island Frozen Food/Ice Cream Merchandiser (OWEZ) 294

Multi-Deck Island Merchandisers 297
Wide Island Multi-Deck Deli/Meat Merchandiser (O2IM) 298
Narrow Island Multi-Deck Deli/Meat Merchandiser (ON3IM) 300
Wide Island Multi-Deck Deli/Meat Merchandiser (O3IM) 302
Wide Island Multi-Deck Produce Merchandiser (O3IP) 306
Wide Island Multi-Deck Deli Merchandiser (O4ID) 310

Service Merchandisers 315
American Style Curved Glass Service Deli Merchandiser (OSA) 316
American Style Curved Glass Service Meat/Deli/Seafood Gravity Coil Merchandiser (OSAG) 320
Flat Glass Service Meat/Deli/Seafood Gravity Coil Merchandiser (OSGF) 324
American Style Vertical Glass Service Deli Merchandiser (OSM) 328

Service Merchandisers (Continued) 315
American Style Vertical Glass Service Meat/Deli/Seafood Gravity Coil Merchandiser (OGM) 332
American Style Flat Glass Service Frozen Food Merchandiser (OSMLZ) 336
International Style Single Deck Deli/Meat/Seafood Merchandiser (OSIO) 338
Wide International Style Single Deck Deli/Meat/Seafood Merchandiser (OWSIO) 340
International Style Service Deli/Meat/Seafood Merchandiser (OSI) 342
Wide International Style Service Deli/Meat/Seafood Merchandiser (OWSI) 344
International Style Service Deli/Meat/Seafood Merchandiser (O2SI) 346
International Style Flat Glass Service Deli/Meat/Seafood Merchandiser (OSIF) 348
International Style Flat Glass Service Deli/Meat/Seafood Merchandiser (O2SIF) 350
Flat Glass Service Deli Merchandiser (OLF) 352
Flat Glass Service Deli Gravity Coil Merchandiser (OLFG) 354
Full Service Flat Glass Deli Merchandiser (PDIF) 356
Multi-Deck Curved Glass Dome Deli/Meat/Seafood Merchandiser (PDNUM) 360
Multi-Deck Curved Glass Dome Deli/Meat/Seafood Merchandiser (PMNUM) 362
Multi-Deck Flat Glass Dome Deli/Meat/Seafood Merchandiser (PMFNUM) 364
Multi-Deck Curved Glass Dome Deli/Meat/Seafood Merchandiser (PMN2UM) 366
Multi-Deck Flat Glass Dome Deli/Meat/Seafood Merchandiser (PMFN2UM) 368
Secondary Coolant Gravity Coil Meat Merchandiser (PSG) 370
Secondary Coolant Flat Glass Gravity Coil Meat Merchandiser (PSGF) 376
Secondary Coolant Flat Glass Gravity Coil Meat Merchandiser (P2SGF) 382
Full Service Bakery Merchandiser (OB) 384
Full Service Self-Contained Bakery Merchandiser (OBA) 386
Full Service Dry Bakery Merchandiser (OBD) 388
Self Service Bakery/Deli Merchandiser (OBOL) 390
Self Service Bakery/Deli Merchandiser (OBO) 392
Self Service Self-Contained Bakery/Deli Merchandiser (OBOA) 394
Full Service Flat Glass Bakery Merchandiser (OBIF) 396
Full Service Flat Glass Self-Contained Bakery Merchandiser (OBIFA) 398
Full Service Flat Glass Dry Bakery Merchandiser (OBIFD) 400
Multi-Deck Self Service Hot Foods Merchandiser (ON3W) 402
Single Deck Cub Case Merchandiser (CUBNH) 404
Single Deck Cub Case Merchandiser (CUBN) 406
Single Deck Cub Case Merchandiser (CUBW) 408
Single Deck Cub Case Merchandiser (CUBD) 410

Mobile Self-Contained Merchandisers 413
Single Deck Self-Contained Mobile Deli Merchandiser (MDCA) 414
Single Deck Self-Contained Mobile Deli/Meat Merchandiser (MMCA) 416
Single Deck Self-Contained Mobile Deli/Meat Merchandiser (MMRA) 418
Single Deck Self-Contained Mobile Produce Merchandiser (MPCA) 420
International Style Self-Contained Mobile Deli/Meat/Seafood Merchandiser (OSIOA) 422
International Style Self-Contained Mobile Deli/Meat/Seafood Prep. Merchandiser (OSIOPA) 424
International Style Self-Contained Mobile Sushi Prep. Merchandiser (OSIOA-P) 426
International Style Self-Contained Mobile Dual Temp Merchandiser (OSIOZA) 428

Mobile Self-Contained Merchandisers (Continued) 413
Single Deck Self-Contained Mobile Boxed Produce Merchandiser (UPA) 430
Multi-Deck Self-Contained Mobile Produce/Dairy/Deli/Meat Merchandiser (O2.5UMA) 432
Multi-Deck Self-Contained Mobile Produce/Dairy/Deli/Meat Merchandiser (O3UMA) 434
Multi-Deck Self-Contained Mobile Produce/Dairy/Deli/Meat Merchandiser (O3UMA-56") 436
International Style Self-Contained Mobile Deli/Meat/Seafood Merchandiser (OSIA) 438
International Style Self-Contained Mobile Deli/Meat/Seafood Merchandiser (O2SIA) 440

Curved Case Merchandisers 443
Curved Case Electrical and Refrigeration Data 444
30° Inside & Outside Curved Case 448
45° Inside & Outside Curved Case 449
60° Inside & Outside Curved Case 450
90° Inside & Outside Curved Case 451

Index 452

SINGLE DECK

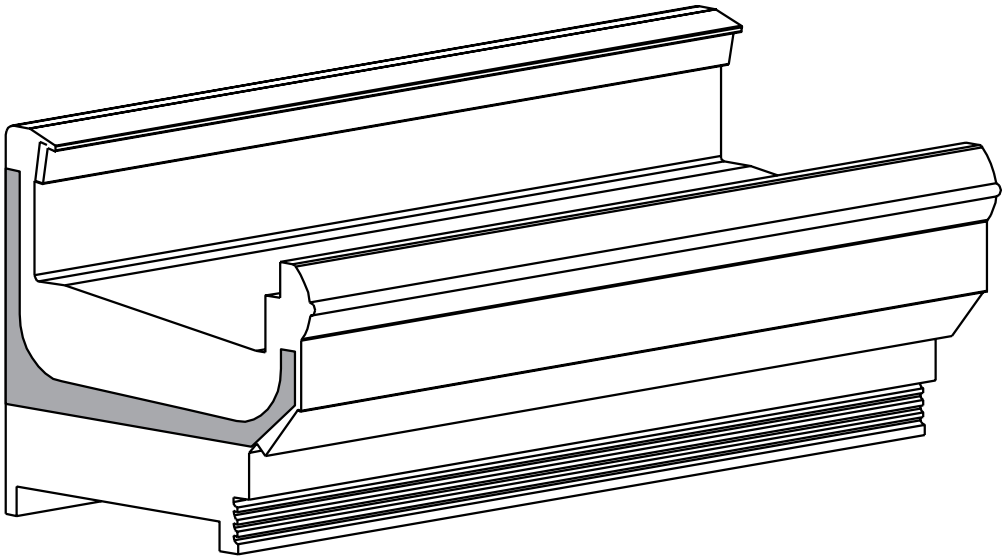

Notes:

- **Cases comply with ANSI / NSF* Standard 7. Units marked as components require remote refrigeration.**
- **Allow for an extra 1/8" per joint when lining up merchandisers.**
- **Front sill height does not affect case performance unless specifically shown.**
- **Front and rear sill heights vary with baseframe height.**

* ANSI - American National Standard Institute
NSF - National Sanitation Foundation

Electrical Data

Model		Fans per Case	Standard Fans 120 Volts Amps	Standard Fans 120 Volts Watts	High Efficiency Fans 120 Volts Amps	High Efficiency Fans 120 Volts Watts	Anti-Condensate Heaters 120 Volts Amps	Anti-Condensate Heaters 120 Volts Watts	Defrost Heaters 208 Volts Amps	Defrost Heaters 208 Volts Watts	Defrost Heaters 240 Volts Amps	Defrost Heaters 240 Volts Watts
MPC	8'	3	1.35	51	0.45	33	0.58	70	3.85	800	4.44	1065
	12'	4	1.80	68	0.60	44	0.83	100	5.77	1200	6.67	1600

Lighting Data

Model		Bulbs per Row	Bulb Length	Typical per Light Row 120 Volts Amps	Typical per Light Row 120 Volts Watts	Maximum Lighting 120 Volts Amps	Maximum Lighting 120 Volts Watts
MPC	8'	- - -	4'	- - -	- - -	- - -	- - -
	12'	- - -	4'	- - -	- - -	- - -	- - -

Guidelines & Control Settings

Model	BTUH/ft[1]	Evaporator (°F)	Superheat Set Point @ Bulb (°F)	Discharge Air (°F)	Return Air (°F)	Discharge Air Velocity[2] (FPM)
MPC	617	22	6-8	30	42	163

[1] BTUHs/ft listed are for parallel operation. Conventional ratings may be approximated by multiplying listed rating by 1.04.

[2] Average discharge air velocity at peak of defrost.

Defrost Controls

Model	Defrosts Per Day	Run-Off Time (min)	Electric Defrost Fail-safe (min)	Electric Defrost Termination Temp. (°F)	Timed Off Defrost Fail-safe (min)	Timed Off Defrost Termination Temp. (°F)	Hot Gas Defrost Fail-safe (min)	Hot Gas Defrost Termination Temp. (°F)	Reverse Air Defrost Fail-safe (min)	Reverse Air Defrost Termination Temp. (°F)
MPC	3	6 - 8	40	49	60	47	- - - [3]	- - -	- - -	- - -

[3] NOTE: - - - not an option on this case model.

Medium Temperature Defrost Schedule

No. Per Day	Hours
1	12 midnight
2	12 am - 12 pm
3	6 am - 2 pm - 10 pm
4	12 - 6 am - 12 - 6 pm

All measurements are taken per ARI 1200 - 2002 specifications.

NSF COMPONENT

c UL us

Hill PHOENIX EXCELLENCE

A DOVER COMPANY

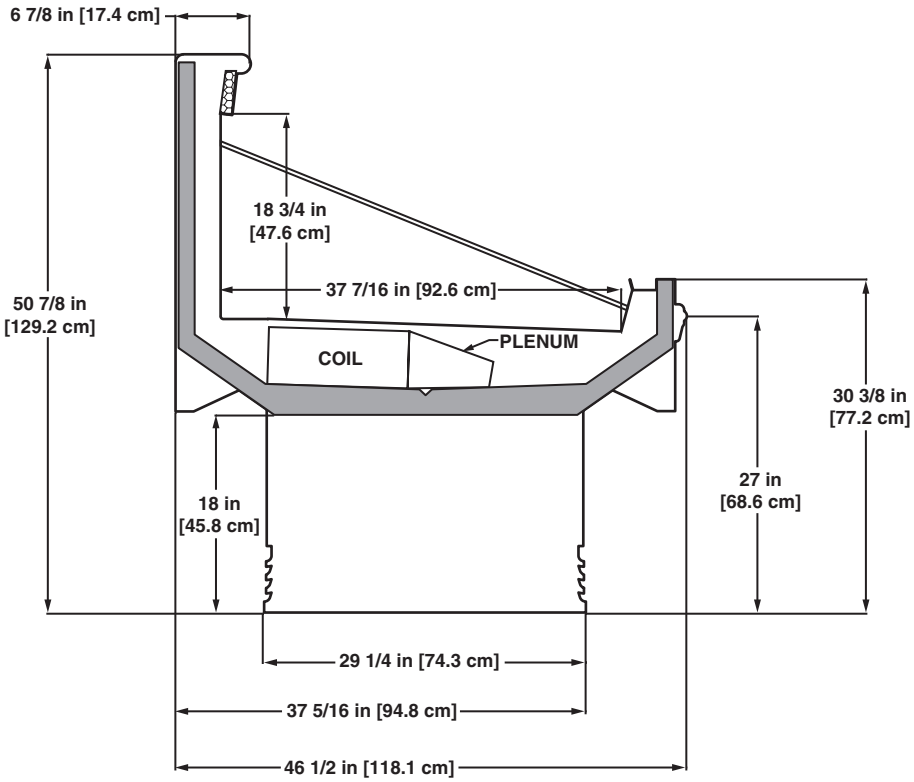

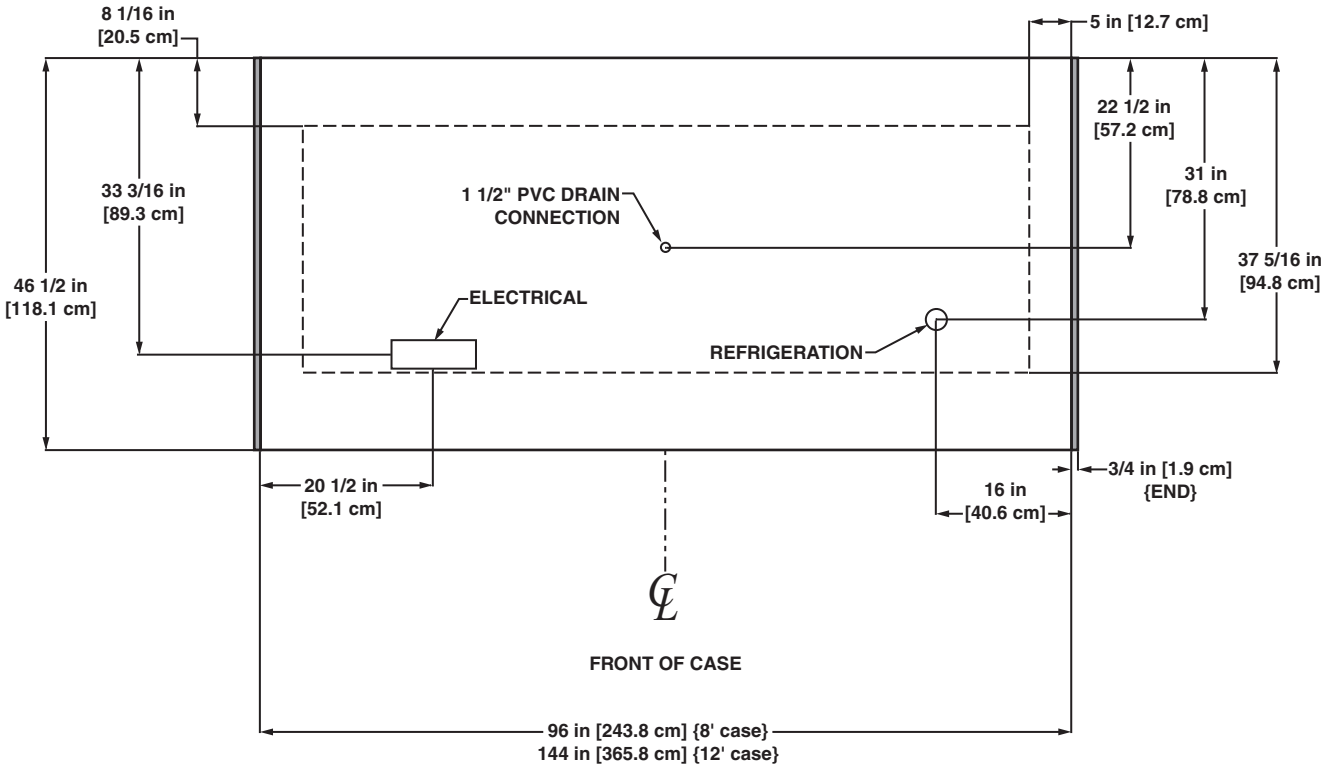

NSF COMPONENT c UL us

A DOVER™ COMPANY

Single Deck Deli/Cheese Merchandiser

OC - 4′, 6′, 8′ & 12

Electrical Data

Model		Fans per Case	Standard Fans 120 Volts Amps	Standard Fans 120 Volts Watts	High Efficiency Fans 120 Volts Amps	High Efficiency Fans 120 Volts Watts	Anti-Condensate Heaters 120 Volts Amps	Anti-Condensate Heaters 120 Volts Watts	Defrost Heaters 208 Volts Amps	Defrost Heaters 208 Volts Watts	Defrost Heaters 240 Volts Amps	Defrost Heaters 240 Volts Watts
OC	4′	2	1.00	60	0.15	9.2	0.14	17	1.92	400	2.22	532
	6′	2	1.00	60	0.15	9.2	0.20	24	2.88	600	3.33	798
	8′	2	1.00	60	0.15	9.2	0.25	30	3.85	800	4.44	1065
	12′	3	1.50	90	0.23	13.8	0.38	46	5.77	1200	6.67	1600

Lighting Data

Model		Bulbs per Row	Bulb Length	Typical per Light Row 120 Volts Amps	Typical per Light Row 120 Volts Watts	Maximum Lighting 120 Volts Amps	Maximum Lighting 120 Volts Watts
OC	4′	1	4′	0.23	28	0.23	28
	6′	2	3′	0.37	44	0.37	44
	8′	2	4′	0.47	56	0.47	56
	12′	3	4′	0.70	84	0.70	84

Guidelines & Control Settings

Model	Front Sill Heights	BTUH/ft[1]	Coil Type	Evaporator (°F)	Superheat Set Point @ Bulb (°F)	Discharge Air (°F)	Return Air (°F)	Discharge Air Velocity[3] (FPM)
OC	Standard	480[2]	Enh.	22	6-8	26	39	305
	All Others	415[2]	Enh.	22	6-8	26	35	305

[1] BTUHs/ft listed are for parallel operation. Conventional ratings may be approximated by multiplying listed rating by 1.04.

[2] High efficiency fans reduce refrigeration load by 96 BTUHs/fan.

[3] Average discharge air velocity at peak of defrost.

Defrost Controls

Model	Defrosts Per Day	Run-Off Time (min)	Electric Defrost Fail-safe (min)	Electric Defrost Termination Temp. (°F)	Timed Off Defrost Fail-safe (min)	Timed Off Defrost Termination Temp. (°F)	Hot Gas Defrost Fail-safe (min)	Hot Gas Defrost Termination Temp. (°F)	Reverse Air Defrost Fail-safe (min)	Reverse Air Defrost Termination Temp. (°F)
OC	3	6 - 8	40	49	70	47	26	45	40	45

Medium Temperature Defrost Schedule

No. Per Day	Hours
1	12 midnight
2	12 am - 12 pm
3	6 am - 2 pm - 10 pm
4	12 - 6 am - 12 - 6 pm

All measurements are taken per ARI 1200 - 2002 specifications.

NSF COMPONENT
c UL us
Hill PHOENIX EXCELLENCE
A DOVER COMPANY

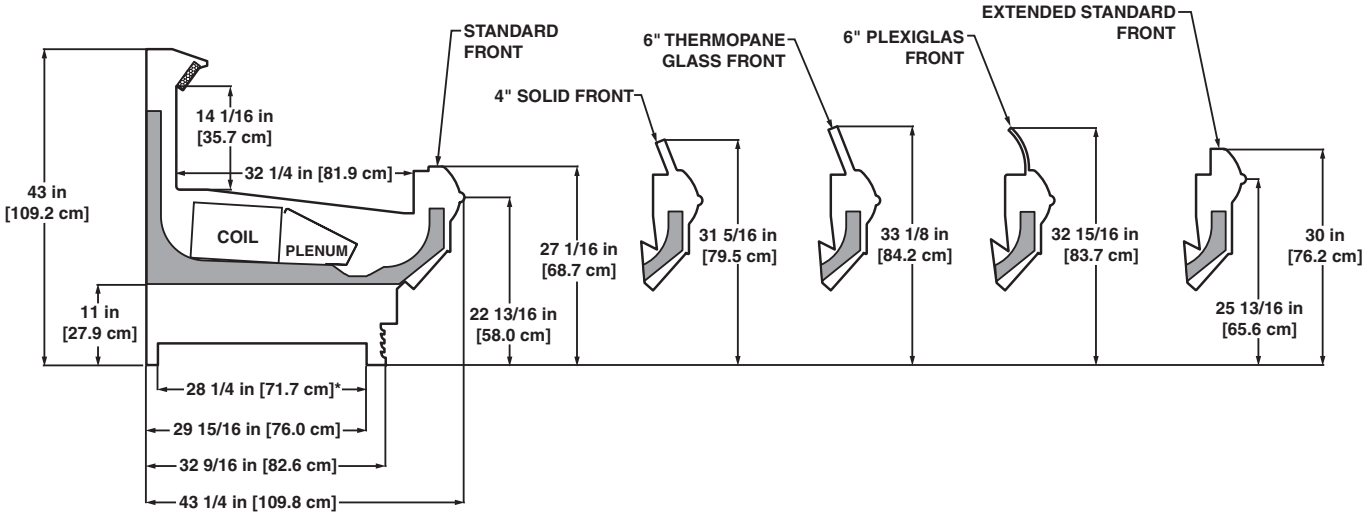

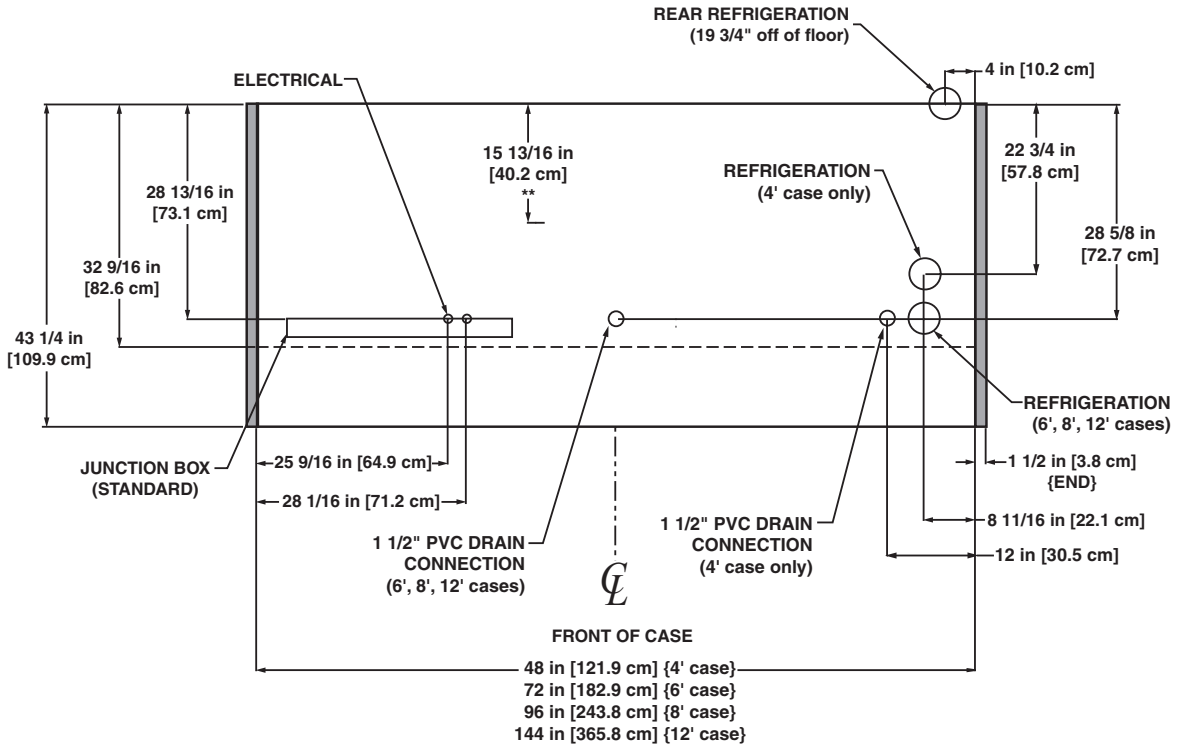

NOTES:

* STUB-UP AREA
** RECOMMENDED STUB-UP CENTERLINE FOR ELECTRICAL AND HUB DRAIN

- FRONT AND REAR SILL HEIGHTS VARY WITH BASEFRAME HEIGHT
- ENDS ADD APPROXIMATELY 1 INCH TO CASE HEIGHT
- A 2" MINIMUM AIR GAP IS REQUIRED BETWEEN THE REAR OF THE CASE AND A WALL
- SUCTION LINE (4' & 6') - 1/2", SUCTION LINE (8' & 12') - 5/8", LIQUID LINE (ALL LENGTHS) - 3/8"

Single Deck Deli/Meat/Seafood Merchandiser

OM - 4′, 6′, 8′ & 12′

Electrical Data

Model		Fans per Case	Standard Fans 120 Volts Amps	Standard Fans 120 Volts Watts	High Efficiency Fans 120 Volts Amps	High Efficiency Fans 120 Volts Watts	Anti-Condensate Heaters 120 Volts Amps	Anti-Condensate Heaters 120 Volts Watts	Defrost Heaters 208 Volts Amps	Defrost Heaters 208 Volts Watts	Defrost Heaters 240 Volts Amps	Defrost Heaters 240 Volts Watts
OM	4′	2	1.00	60	0.15	9.2	0.14[1]	17	1.92	400	2.22	532
	6′	2	1.00	60	0.15	9.2	0.20[1]	24	2.88	600	3.33	798
	8′	2	1.00	60	0.15	9.2	0.25[1]	30	3.85	800	4.44	1065
	12′	3	1.50	90	0.23	13.8	0.38[1]	46	5.77	1200	6.67	1600

[1] Anti-condensate heater data for unlighted rear sill. For lighted rear sill, double the values.

Lighting Data

Model		Bulbs per Row	Bulb Length	Typical per Light Row 120 Volts Amps	Typical per Light Row 120 Volts Watts	Maximum Lighting 120 Volts Amps	Maximum Lighting 120 Volts Watts
OM	4′	1	4′	0.23	28	1.67	140
	6′	2	3′	0.37	44	1.83	220
	8′	2	4′	0.47	56	2.33	280
	12′	3	4′	0.70	84	3.50	420

Guidelines & Control Settings

Model	Front Sill Heights	BTUH/ft[2]	Coil Type	Evaporator (°F)	Superheat Set Point @ Bulb (°F)	Discharge Air (°F)	Return Air (°F)	Discharge Air Velocity[4] (FPM)
OM	Standard	480[3]	Enh.	22	6-8	26	39	305
	All Others	415[3]	Enh.	22	6-8	26	35	305

[2] BTUHs/ft listed are for parallel operation. Conventional ratings may be approximated by multiplying listed rating by 1.04.

[3] High efficiency fans reduce refrigeration load by 96 BTUHs/fan.

[4] Average discharge air velocity at peak of defrost.

Defrost Controls

Model	Defrosts Per Day	Run-Off Time (min)	Electric Defrost Fail-safe (min)	Electric Defrost Termination Temp. (°F)	Timed Off Defrost Fail-safe (min)	Timed Off Defrost Termination Temp. (°F)	Hot Gas Defrost Fail-safe (min)	Hot Gas Defrost Termination Temp. (°F)	Reverse Air Defrost Fail-safe (min)	Reverse Air Defrost Termination Temp. (°F)
OM	3	6 - 8	40	49	70	47	26	45	40	45

Medium Temperature Defrost Schedule

No. Per Day	Hours
1	12 midnight
2	12 am - 12 pm
3	6 am - 2 pm - 10 pm
4	12 - 6 am - 12 - 6 pm

All measurements are taken per ARI 1200 - 2002 specifications.

NSF COMPONENT
c UL us
HILL PHOENIX EXCELLENCE
A DOVER COMPANY

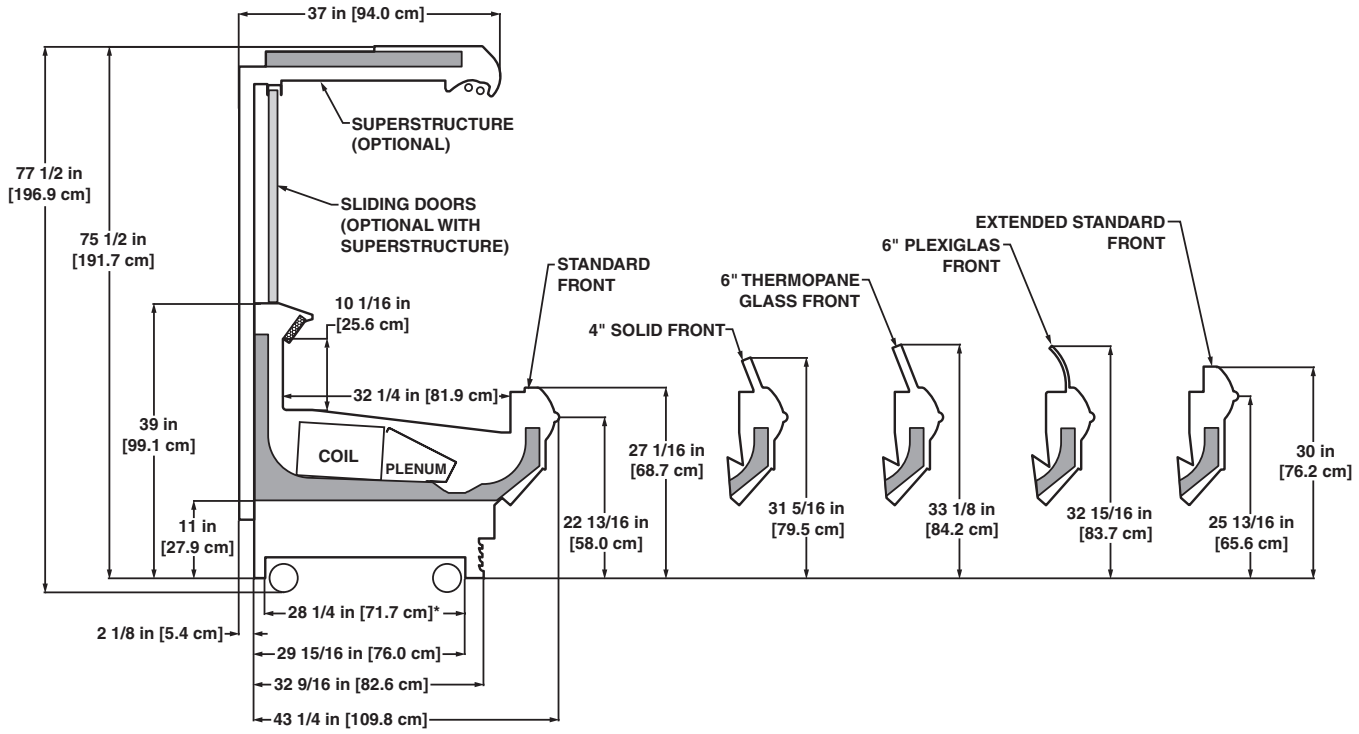

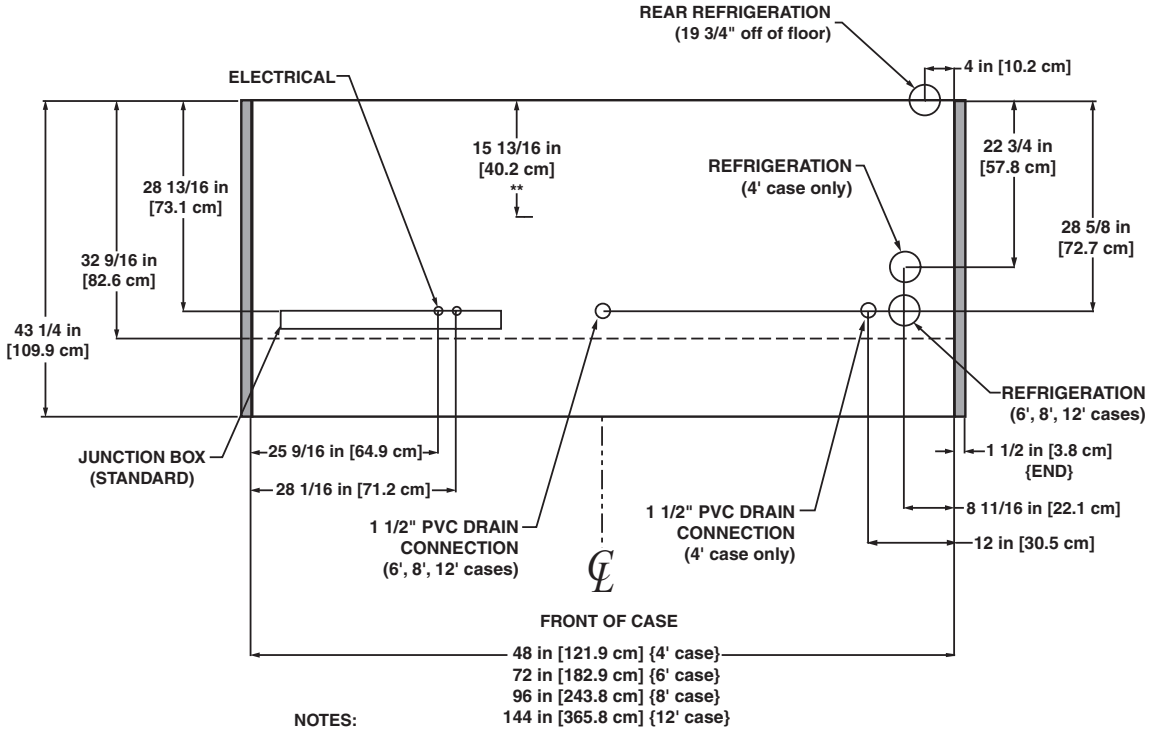

NOTES:

* STUB-UP AREA
** RECOMMENDED STUB-UP CENTERLINE FOR ELECTRICAL AND HUB DRAIN

- FRONT AND REAR SILL HEIGHTS VARY WITH BASEFRAME HEIGHT
- ENDS ADD APPROXIMATELY 1 INCH TO CASE HEIGHT
- A 2" MINIMUM AIR GAP IS REQUIRED BETWEEN THE REAR OF THE CASE AND A WALL
- SUCTION LINE (4' & 6') - 1/2", SUCTION LINE (8' & 12') - 5/8", LIQUID LINE (ALL LENGTHS) - 3/8"

NSF COMPONENT c UL us

A DOVER COMPANY

Narrow Single Deck Frozen Meat Merchandiser

ONMZ - 6′, 8′ & 12′

Electrical Data

Model		Fans per Case	Standard Fans 120 Volts Amps	Standard Fans 120 Volts Watts	High Efficiency Fans 120 Volts Amps	High Efficiency Fans 120 Volts Watts	Anti-Condensate Heaters 120 Volts Amps	Anti-Condensate Heaters 120 Volts Watts	Defrost Heaters 208 Volts Amps	Defrost Heaters 208 Volts Watts	Defrost Heaters 240 Volts Amps	Defrost Heaters 240 Volts Watts
ONMZ	6′	2	1.00	60	0.23	14	0.90	108	5.00[1]	1800	5.76[1]	2394
	8′	2	1.00	60	0.23	14	0.96	115	6.66[1]	2400	7.69[1]	3195
	12′	3	1.50	90	0.35	21	1.83	220	7.99[1]	2880	9.24[1]	3840

1 NOTE: 3 phase load. Figures given in maximum amps per phase.

Lighting Data

Model		Bulbs per Row	Bulb Length	Typical per Light Row 120 Volts Amps	Typical per Light Row 120 Volts Watts	Maximum Lighting 120 Volts Amps	Maximum Lighting 120 Volts Watts
ONMZ	6′	2	3′	0.37	44	0.37	44
	8′	2	4′	0.47	56	0.47	56
	12′	3	4′	0.70	84	0.70	84

Guidelines & Control Settings

Model	BTUH/ft[2]	Evaporator (°F)	Superheat Set Point @ Bulb (°F)	Discharge Air (°F)	Return Air (°F)	Discharge Air Velocity[4] (FPM)
ONMZ	430[3]	0	3-5	12	25	220

[2] BTUHs/ft listed are for parallel operation. Conventional ratings may be approximated by multiplying listed rating by 1.04.

[3] High efficiency fans reduce refrigeration load by 96 BTUHs/fan.

[4] Average discharge air velocity at peak of defrost.

Defrost Controls

Model	Defrosts Per Day	Run-Off Time (min)	Electric Defrost Fail-safe (min)	Electric Defrost Termination Temp. (°F)	Timed Off Defrost Fail-safe (min)	Timed Off Defrost Termination Temp. (°F)	Hot Gas Defrost Fail-safe (min)	Hot Gas Defrost Termination Temp. (°F)	Reverse Air Defrost Fail-safe (min)	Reverse Air Defrost Termination Temp. (°F)
ONMZ	4	13 - 15	45	47	- - -[5]	- - -	20	60	- - -	- - -

[5] NOTE: - - - not an option on this case model.

Medium Temperature Defrost Schedule

No. Per Day	Hours
1	12 midnight
2	12 am - 12 pm
3	6 am - 2 pm - 10 pm
4	12 - 6 am - 12 - 6 pm

All measurements are taken per ARI 1200 - 2002 specifications.

NSF COMPONENT

c UL us

Hill PHOENIX EXCELLENCE

A DOVER COMPANY

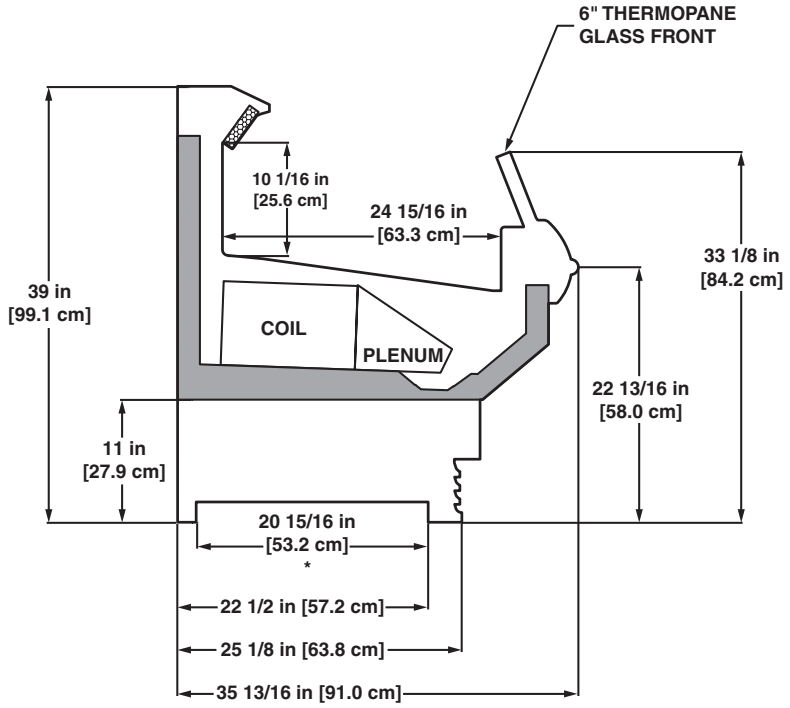

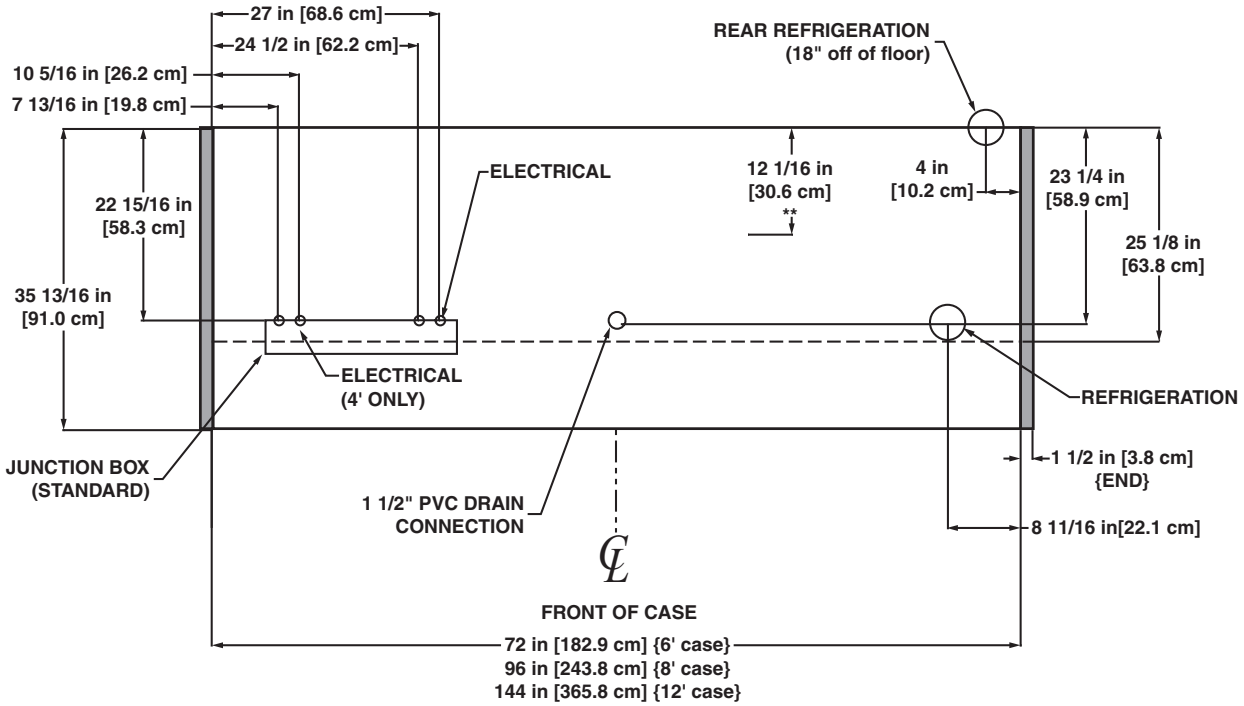

NOTES:

* STUB-UP AREA
** RECOMMENDED STUB-UP CENTERLINE FOR ELECTRICAL AND HUB DRAINS

- FRONT AND REAR SILL HEIGHTS VARY WITH BASEFRAME HEIGHT
- ENDS ADD APPROXIMATELY 1 INCH TO CASE HEIGHT
- A 2" MINIMUM AIR GAP IS REQUIRED BETWEEN THE REAR OF THE CASE AND A WALL
- SUCTION LINE - 7/8", LIQUID LINE - 3/8"

NSF COMPONENT c UL us

A DOVER COMPANY

Single Deck Frozen Meat Merchandiser

OMZ - 4′, 6′, 8′ & 12′

Electrical Data

Model		Fans per Case	Standard Fans 120 Volts Amps	Standard Fans 120 Volts Watts	High Efficiency Fans 120 Volts Amps	High Efficiency Fans 120 Volts Watts	Anti-Condensate Heaters 120 Volts Amps	Anti-Condensate Heaters 120 Volts Watts	Defrost Heaters 208 Volts Amps	Defrost Heaters 208 Volts Watts	Defrost Heaters 240 Volts Amps	Defrost Heaters 240 Volts Watts
OMZ	4′	2	1.00	60	0.23	14	0.60	72	3.33[1]	1200	3.84[1]	1596
	6′	2	1.00	60	0.23	14	0.90	108	5.00[1]	1800	5.76[1]	2394
	8′	2	1.00	60	0.23	14	0.96	115	6.66[1]	2400	7.69[1]	3195
	12′	3	1.50	90	0.35	21	1.83	220	7.99[1]	2880	9.24[1]	3840

1 NOTE: 3 phase load. Figures given in maximum amps per phase.

Lighting Data

Model		Bulbs per Row	Bulb Length	Typical per Light Row 120 Volts Amps	Typical per Light Row 120 Volts Watts	Maximum Lighting 120 Volts Amps	Maximum Lighting 120 Volts Watts
OMZ	4′	1	4′	0.23	28	0.23	28
	6′	2	3′	0.37	44	0.37	44
	8′	2	4′	0.47	56	0.47	56
	12′	3	4′	0.70	84	0.70	84

Guidelines & Control Settings

Model	BTUH/ft[2]	Evaporator (°F)	Superheat Set Point @ Bulb (°F)	Discharge Air (°F)	Return Air (°F)	Discharge Air Velocity[4] (FPM)
OMZ	550[3]	-22	3-5	-10	0	220

[2] BTUHs/ft listed are for parallel operation. Conventional ratings may be approximated by multiplying listed rating by 1.04.

[3] High efficiency fans reduce refrigeration load by 96 BTUHs/fan.

[4] Average discharge air velocity at peak of defrost.

Defrost Controls

Model	Defrosts Per Day	Run-Off Time (min)	Electric Defrost Fail-safe (min)	Electric Defrost Termination Temp. (°F)	Timed Off Defrost Fail-safe (min)	Timed Off Defrost Termination Temp. (°F)	Hot Gas Defrost Fail-safe (min)	Hot Gas Defrost Termination Temp. (°F)	Reverse Air Defrost Fail-safe (min)	Reverse Air Defrost Termination Temp. (°F)
OMZ	4	13 - 15	45	47	- - -[5]	- - -	20	60	- - -	- - -

[5] NOTE: - - - not an option on this case model.

Medium Temperature Defrost Schedule

No. Per Day	Hours
1	12 midnight
2	12 am - 12 pm
3	6 am - 2 pm - 10 pm
4	12 - 6 am - 12 - 6 pm

All measurements are taken per ARI 1200 - 2002 specifications.

NSF COMPONENT

c UL us

Hill PHOENIX EXCELLENCE

A DOVER COMPANY

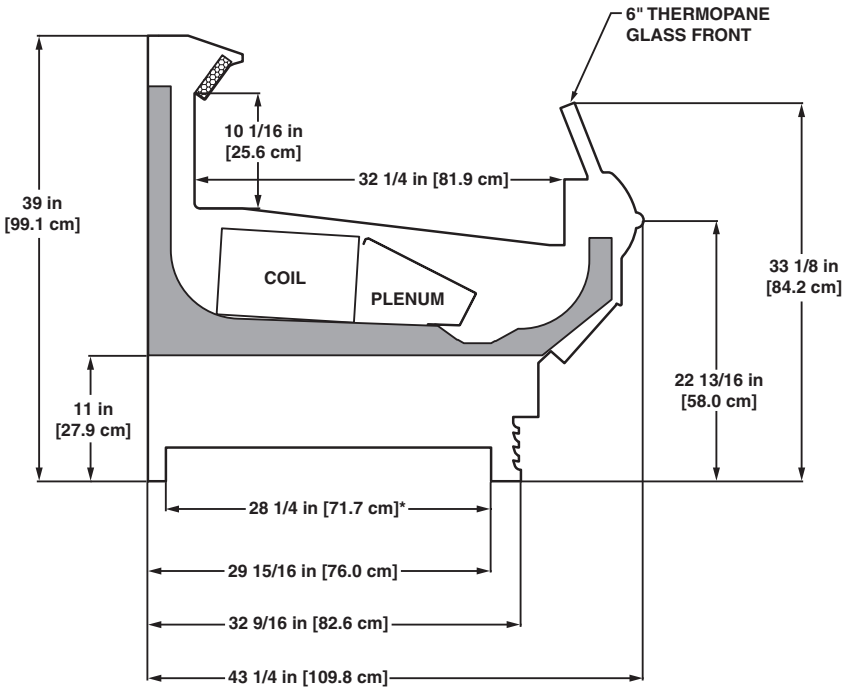

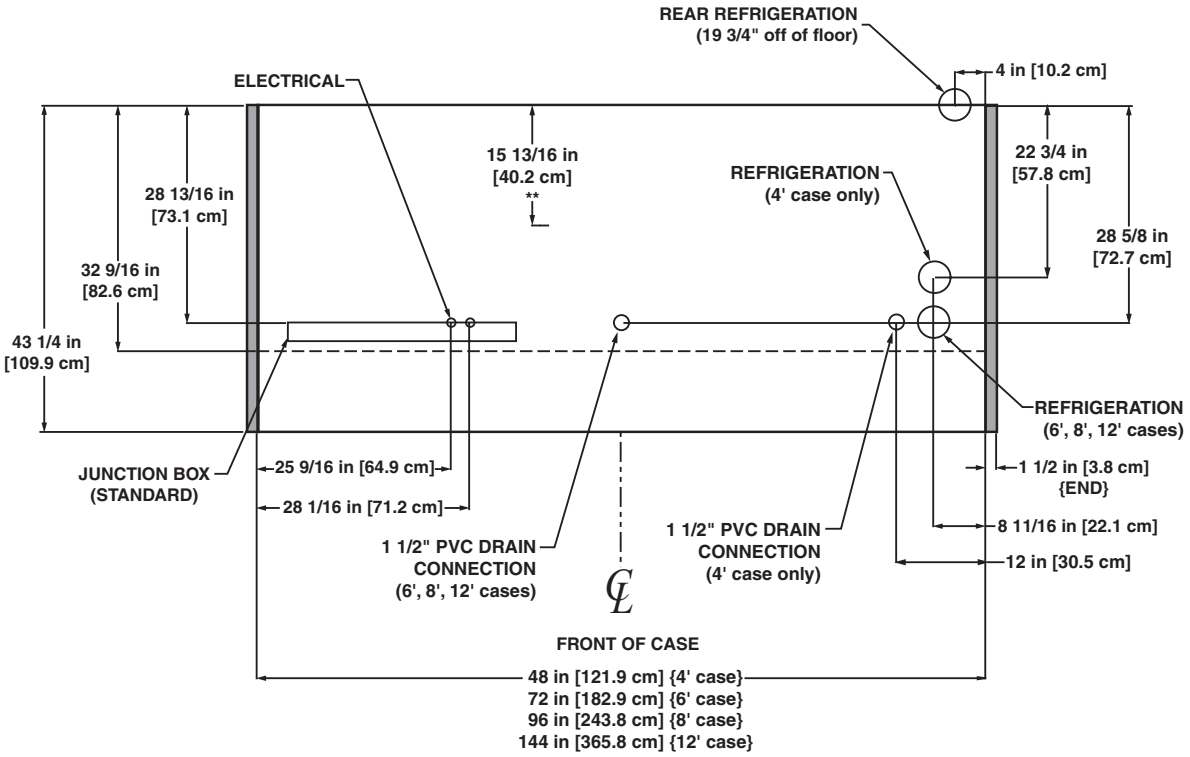

NOTES:

* STUB-UP AREA
** RECOMMENDED STUB-UP CENTERLINE FOR ELECTRICAL AND HUB DRAINS

- FRONT AND REAR SILL HEIGHTS VARY WITH BASEFRAME HEIGHT
- ENDS ADD APPROXIMATELY 1 INCH TO CASE HEIGHT
- A 2" MINIMUM AIR GAP IS REQUIRED BETWEEN THE REAR OF THE CASE AND A WALL
- SUCTION LINE - 7/8", LIQUID LINE - 3/8"

NSF COMPONENT c UL us

A DOVER COMPANY

Single Deck Frozen Food/Ice Cream Merchandiser

OMZD - 4′, 6′, 8′ & 12′

Electrical Data

Model		Fans per Case	Standard Fans 120 Volts Amps	Standard Fans 120 Volts Watts	High Efficiency Fans 120 Volts Amps	High Efficiency Fans 120 Volts Watts	Anti-Condensate Heaters 120 Volts Amps	Anti-Condensate Heaters 120 Volts Watts	Defrost Heaters 208 Volts Amps	Defrost Heaters 208 Volts Watts	Defrost Heaters 240 Volts Amps	Defrost Heaters 240 Volts Watts
OMZD	4′	2	0.68	34	0.30	22	1.14	137	3.85	800	4.43	1064
	6′	2	0.68	34	0.30	22	1.28	154	11.54	2400	13.31	3196
	8′	3	1.02	51	0.45	33	1.45	174	15.38	3200	17.75	4260
	12′	4	1.36	68	0.60	44	2.59	311	23.08	4800	26.63	6390

Lighting Data

Model		Bulbs per Row	Bulb Length	Typical per Light Row 120 Volts Amps	Typical per Light Row 120 Volts Watts	Maximum Lighting 120 Volts Amps	Maximum Lighting 120 Volts Watts
OMZD	4′	1	4′	0.23	28	0.23	28
	6′	2	3′	0.37	44	0.37	44
	8′	2	4′	0.47	56	0.47	56
	12′	3	4′	0.70	84	0.70	84

Guidelines & Control Settings

Model	BTUH/ft[1]	Evaporator (°F)	Superheat Set Point @ Bulb (°F)	Discharge Air (°F)	Return Air (°F)	Discharge Air Velocity[2] (FPM)
OMZD-F[3]	456	-17	3-5	-8	2	240
OMZD-C[3]	476	-27	3-5	-18	-8	240

[1] BTUHs/ft listed are for parallel operation. Conventional ratings may be approximated by multiplying listed rating by 1.04.

[2] Average discharge air velocity at peak of defrost.

[3] F=frozen food, C=ice cream.

Defrost Controls

Model	Defrosts Per Day	Run-Off Time (min)	Electric Defrost Fail-safe (min)	Electric Defrost Termination Temp. (°F)	Timed Off Defrost Fail-safe (min)	Timed Off Defrost Termination Temp. (°F)	Hot Gas Defrost Fail-safe (min)	Hot Gas Defrost Termination Temp. (°F)	Reverse Air Defrost Fail-safe (min)	Reverse Air Defrost Termination Temp. (°F)
OMZD	1	13 - 15	45	48	- - -[4]	- - -	20	60	- - -	- - -

[4] NOTE: - - - not an option on this case model.

Low Temperature Defrost Schedule

No. Per Day	Hours
1	10 pm
2	6 am - 10 pm**

All measurements are taken per ARI 1200 - 2002 specifications.

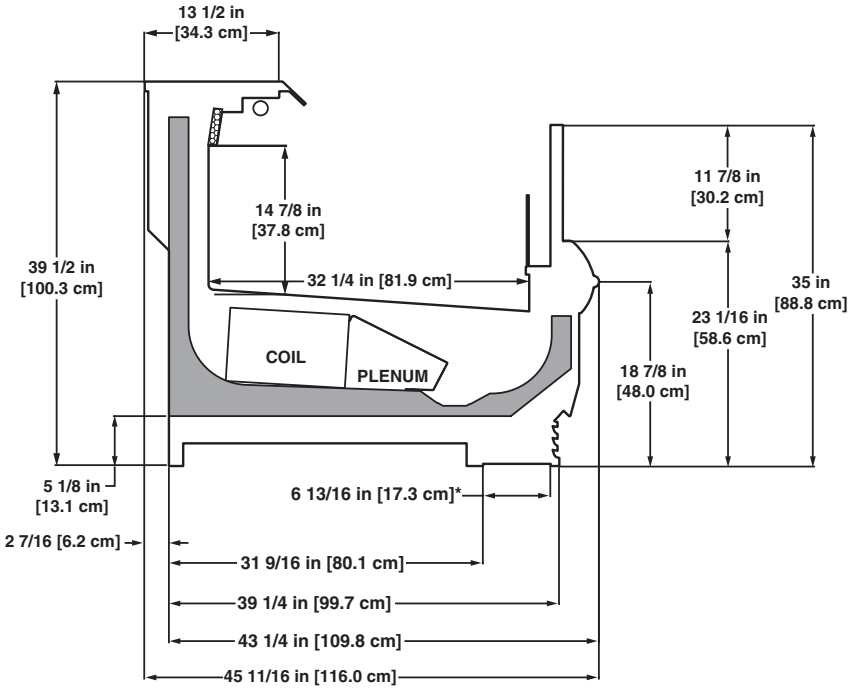

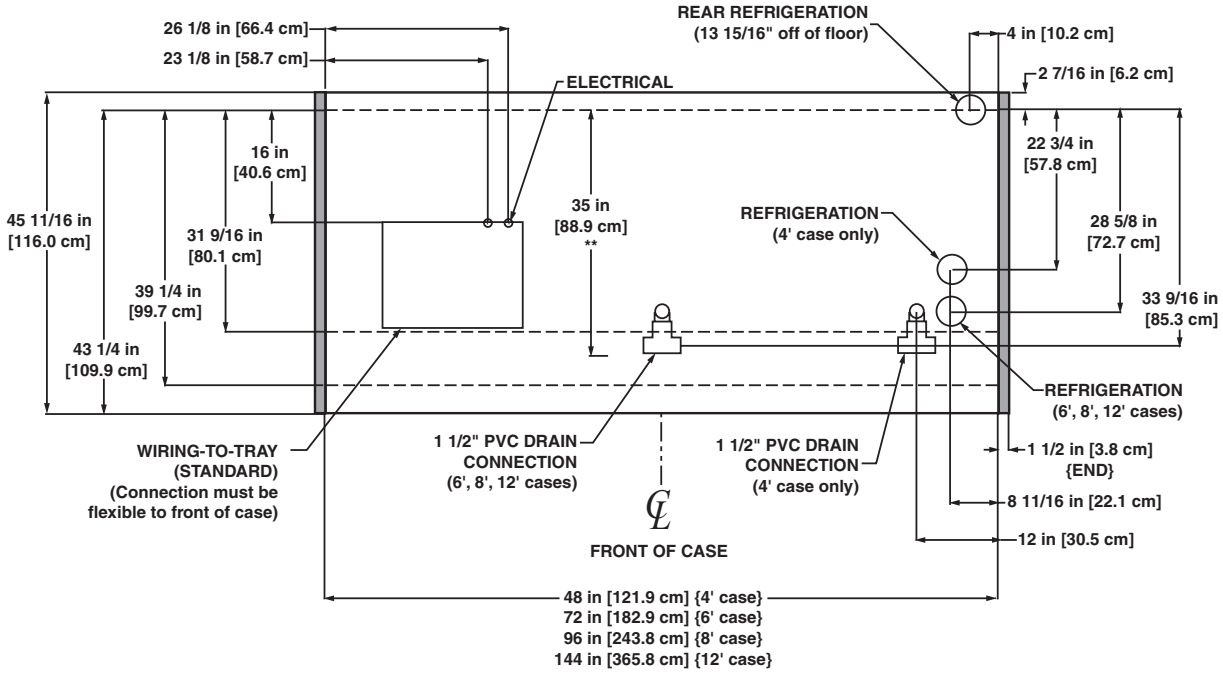

NOTES:

* STUB-UP AREA
** RECOMMENDED STUB-UP CENTERLINE FOR ELECTRICAL AND HUB DRAINS

- FRONT AND REAR SILL HEIGHTS VARY WITH BASEFRAME HEIGHT
- ENDS ADD APPROXIMATELY 1 INCH TO CASE HEIGHT
- SUCTION LINE (4') - 1/2", SUCTION LINE (6' & 8') - 5/8", SUCTION LINE (12') - 7/8"
- LIQUID LINE (ALL LENGTHS) - 3/8"

Narrow Single Deck Produce Merchandiser

ONP - 4′, 6′, 8′ & 12′

Electrical Data

Model		Fans per Case	Standard Fans 120 Volts Amps	Standard Fans 120 Volts Watts	High Efficiency Fans 120 Volts Amps	High Efficiency Fans 120 Volts Watts	Anti-Condensate Heaters 120 Volts Amps	Anti-Condensate Heaters 120 Volts Watts	Defrost Heaters 208 Volts Amps	Defrost Heaters 208 Volts Watts	Defrost Heaters 240 Volts Amps	Defrost Heaters 240 Volts Watts
ONP	4′	2	1.00	60	0.15	9.2	- - -[1]	- - -	1.92	400	2.22	532
	6′	2	1.00	60	0.15	9.2	- - -	- - -	2.88	600	3.33	798
	8′	2	1.00	60	0.15	9.2	- - -	- - -	3.85	800	4.44	1065
	12′	3	1.50	90	0.23	13.8	- - -	- - -	5.77	1200	6.67	1600

[1] NOTE: - - - not an option on this case model.

Lighting Data

Model		Bulbs per Row	Bulb Length	Typical per Light Row 120 Volts Amps	Typical per Light Row 120 Volts Watts	Maximum Lighting 120 Volts Amps	Maximum Lighting 120 Volts Watts
ONP	4′	1	4′	- - -	- - -	- - -	- - -
	6′	2	3′	- - -	- - -	- - -	- - -
	8′	2	4′	- - -	- - -	- - -	- - -
	12′	3	4′	- - -	- - -	- - -	- - -

Guidelines & Control Settings

Model	Rear Sill Heights	BTUH/ft[2]	Coil Type	Evaporator (°F)	Superheat Set Point @ Bulb (°F)	Discharge Air (°F)	Return Air (°F)	Discharge Air Velocity[4] (FPM)
ONP - Bulk Produce	43″	401[3]	Enh.	26	6-8	30	45	NA[5]

[2] BTUHs/ft listed are for parallel operation. Conventional ratings may be approximated by multiplying listed rating by 1.04.

[3] High efficiency fans reduce refrigeration load by 96 BTUHs/fan.

[4] Average discharge air velocity at peak of defrost.

[5] Not Applicable.

Defrost Controls

Model	Defrosts Per Day	Run-Off Time (min)	Electric Defrost Fail-safe (min)	Electric Defrost Termination Temp. (°F)	Timed Off Defrost Fail-safe (min)	Timed Off Defrost Termination Temp. (°F)	Hot Gas Defrost Fail-safe (min)	Hot Gas Defrost Termination Temp. (°F)	Reverse Air Defrost Fail-safe (min)	Reverse Air Defrost Termination Temp. (°F)
ONP	2	6 - 8	40	49	60	47	26	45	40	45

Medium Temperature Defrost Schedule

No. Per Day	Hours
1	12 midnight
2	12 am - 12 pm
3	6 am - 2 pm - 10 pm
4	12 - 6 am - 12 - 6 pm

All measurements are taken per ARI 1200 - 2002 specifications.

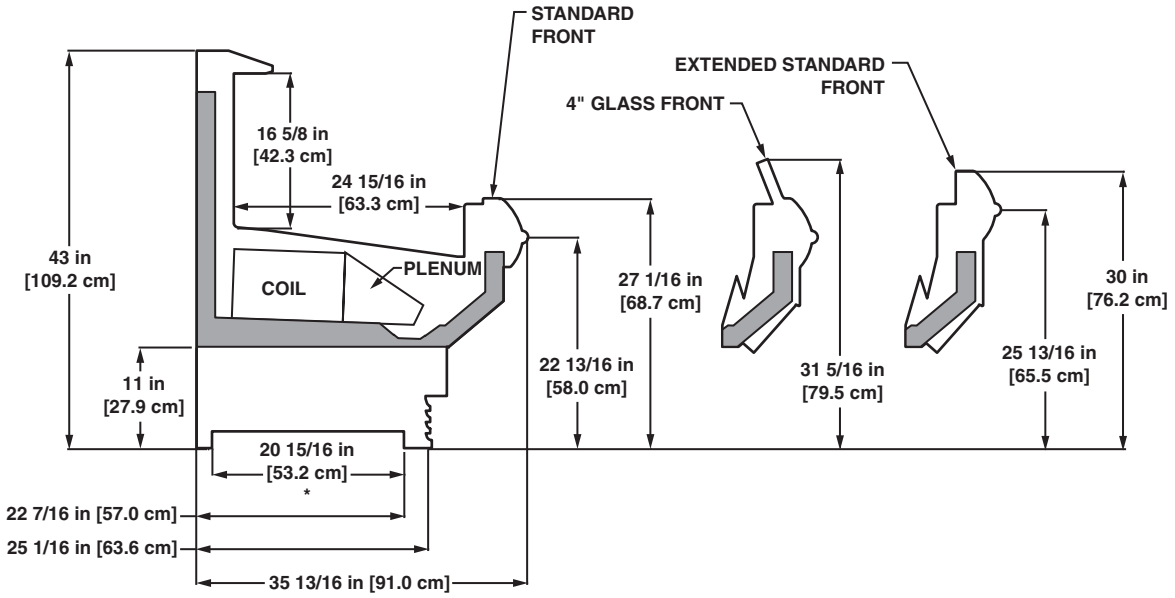

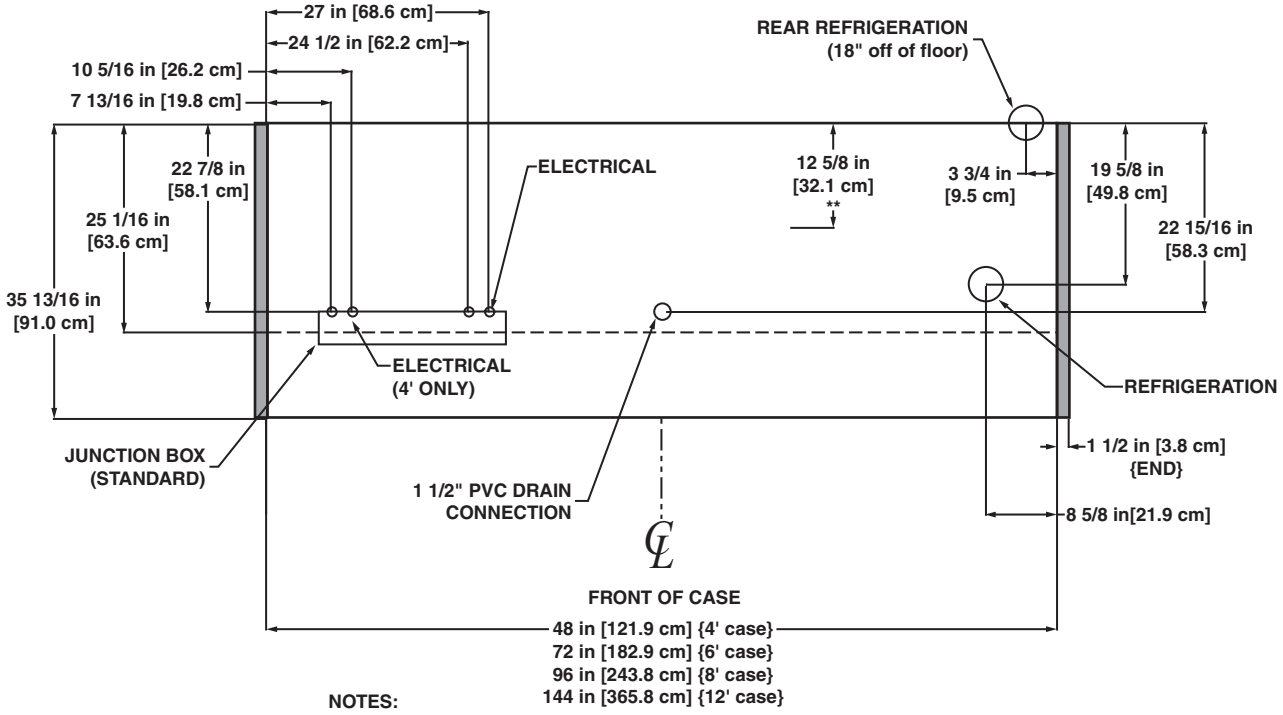

NOTES:

* STUB-UP AREA
** RECOMMENDED STUB-UP CENTERLINE FOR ELECTRICAL AND HUB DRAINS

- FRONT AND REAR SILL HEIGHTS VARY WITH BASEFRAME HEIGHT
- ENDS ADD APPROXIMATELY 1 INCH TO CASE HEIGHT
- A 2" MINIMUM AIR GAP IS REQUIRED BETWEEN THE REAR OF THE CASE AND A WALL
- SUCTION LINE - 7/8", LIQUID LINE - 1/2"

Single Deck Produce Merchandiser

OP - 4′, 6′, 8′ & 12′

Electrical Data

Model		Fans per Case	Standard Fans 120 Volts Amps	Standard Fans 120 Volts Watts	High Efficiency Fans 120 Volts Amps	High Efficiency Fans 120 Volts Watts	Anti-Condensate Heaters 120 Volts Amps	Anti-Condensate Heaters 120 Volts Watts	Defrost Heaters 208 Volts Amps	Defrost Heaters 208 Volts Watts	Defrost Heaters 240 Volts Amps	Defrost Heaters 240 Volts Watts
OP	4′	2	1.00	60	0.15	9.2	0.14	17	1.92	400	2.22	532
	6′	2	1.00	60	0.15	9.2	0.20	24	2.88	600	3.33	798
	8′	2	1.00	60	0.15	9.2	0.25	30	3.85	800	4.44	1065
	12′	3	1.50	90	0.23	13.8	0.38	46	5.77	1200	6.67	1600

Lighting Data

Model		Bulbs per Row	Bulb Length	Typical per Light Row 120 Volts Amps	Typical per Light Row 120 Volts Watts	Maximum Lighting 120 Volts Amps	Maximum Lighting 120 Volts Watts
OP	4′	1	4′	0.23	28	0.23	28
	6′	2	3′	0.37	44	0.37	44
	8′	2	4′	0.47	56	0.47	56
	12′	3	4′	0.70	84	0.70	84

Guidelines & Control Settings

Model	Rear Sill Heights	BTUH/ft[1]	Coil Type	Evaporator (°F)	Superheat Set Point @ Bulb (°F)	Discharge Air (°F)	Return Air (°F)	Discharge Air Velocity[3] (FPM)
OP Cut Produce	39″	288[2]	Enh.	26	6-8	31	42	180
	43″	401[2]	Enh.	26	6-8	30	45	210
OP Bulk Produce	39″	230[2]	Enh.	29	6-8	36	44	180
	43″	374[2]	Enh.	29	6-8	35	47	210

[1] BTUHs/ft listed are for parallel operation. Conventional ratings may be approximated by multiplying listed rating by 1.04.

[2] High efficiency fans reduce refrigeration load by 96 BTUHs/fan.

[3] Average discharge air velocity at peak of defrost.

Defrost Controls

Model	Defrosts Per Day	Run-Off Time (min)	Electric Defrost Fail-safe (min)	Electric Defrost Termination Temp. (°F)	Timed Off Defrost Fail-safe (min)	Timed Off Defrost Termination Temp. (°F)	Hot Gas Defrost Fail-safe (min)	Hot Gas Defrost Termination Temp. (°F)	Reverse Air Defrost Fail-safe (min)	Reverse Air Defrost Termination Temp. (°F)
OP	2	6 - 8	40	49	60	47	26	45	40	45

Medium Temperature Defrost Schedule

No. Per Day	Hours
1	12 midnight
2	12 am - 12 pm
3	6 am - 2 pm - 10 pm
4	12 - 6 am - 12 - 6 pm

All measurements are taken per ARI 1200 - 2002 specifications.

NSF COMPONENT

c UL us

Hill PHOENIX EXCELLENCE

A DOVER COMPANY

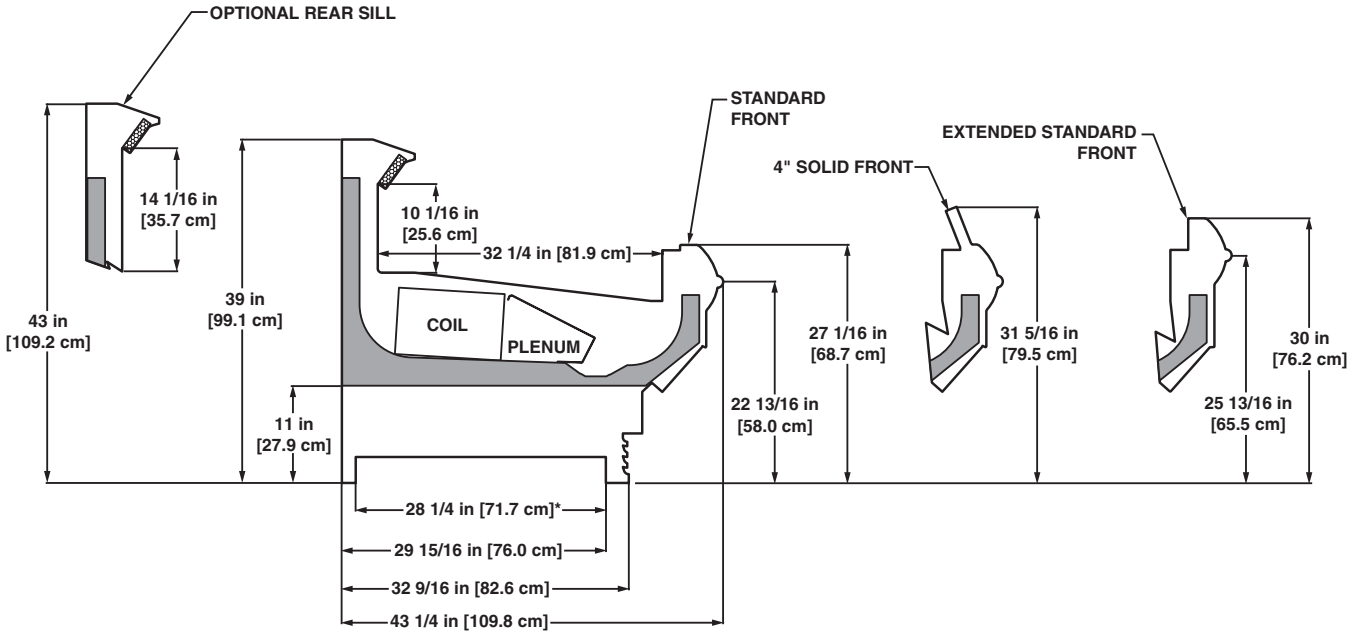

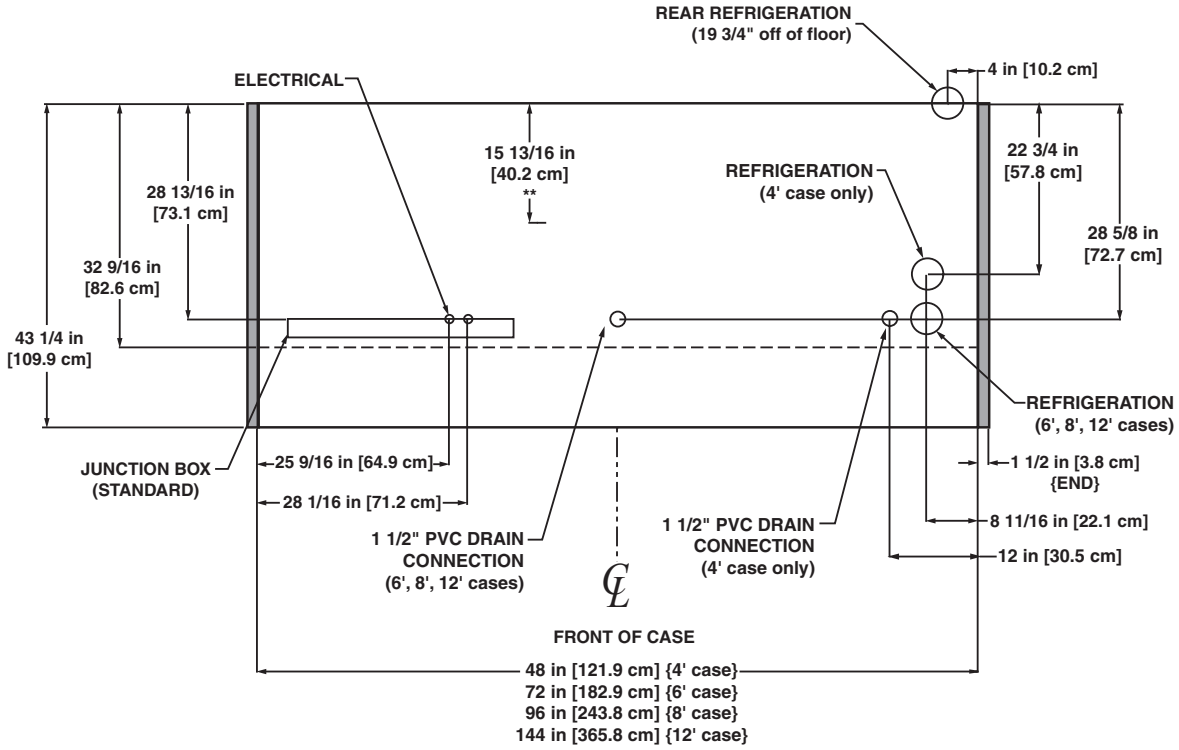

NOTES:

* STUB-UP AREA
** RECOMMENDED STUB-UP CENTERLINE FOR ELECTRICAL AND HUB DRAINS

- FRONT AND REAR SILL HEIGHTS VARY WITH BASEFRAME HEIGHT
- ENDS ADD APPROXIMATELY 1 INCH TO CASE HEIGHT
- A 2" MINIMUM AIR GAP IS REQUIRED BETWEEN THE REAR OF THE CASE AND A WALL
- SUCTION LINE (4' & 6') - 1/2", SUCTION LINE (8' & 12') - 5/8", LIQUID LINE (ALL LENGTHS) - 3/8"

Single Deck Produce Self-Contained Merchandiser

OPA - 6′, 8′ & 12′

System Requirements

Model		Volts	Phase	Hz	Wire	Minimum Circuit Ampacity	Maximum Overcurrent Protection
OPA	6′	120	1	60	2 wire + ground	10.748	20
	8′	120	1	60	2 wire + ground	14.648	30
	12′	120	1	60	2 wire + ground	16.848	35

Electrical Data

Model		Fans per Case	Standard Fans		Condenser Fan		Anti-Condensate Heaters		Defrost Heaters		Drain Heater	
			120 Volts		120 Volts		120 Volts		120 Volts		120 Volts	
			Amps	Watts	Amps	Watts	Amps	Watts	Amps	Watts	Amps	Watts
OPA	6′	2	1.00	60	0.82	49	0.20	24	5.00	600	4.17	500
	8′	2	1.00	60	0.82	49	0.25	30	6.67	800	4.17	500
	12′	3	1.50	90	0.82	49	0.38	46	10.00	1200	4.17	500

Guidelines & Control Settings

Model	24 hr Energy Usage (kWh)	Suction Pressure @ Case Outlet (psig)	Superheat Set Point @ Bulb (°F)	Discharge Air (°F)	Return Air (°F)	Discharge Air Velocity[1] (FPM)
OPA-6′		19.9	6-8	30	45	210
OPA-8′		19.9	6-8	30	45	210
OPA-12′		19.9	6-8	30	45	210

[1] Average discharge air velocity at peak of defrost.

Condensing Unit Data

Model	Volts	Phase	Frequency (Hz)	HP	RLA[2] (amps)	LRA[3] (amps)	Refrig.	lbs of Refrig.
OPA-6′	120	1	60	1/4	5.4	34	R134A	
OPA-8′	120	1	60	1/2	9.3	36	R134A	
OPA-12′	120	1	60	1/2	11	51	R134A	

[2] RLA - Running Load Amps.
[3] LRA - Locked Rotor Amps.

Defrost Controls

Model	Defrosts Per Day	Electric Defrost		Timed Off Defrost		Hot Gas Defrost		Reverse Air Defrost	
		Fail-safe (min)	Termination Temp. (°F)	Fail-safe (min)	Termination Temp. (°F)	Fail-safe (min)	Termination Temp. (°F)	Fail-safe (min)	Termination Temp. (°F)
OPA	2	40	47	60	47	- - - [4]	- - -	- - -	- - -

[4] NOTE: - - - not an option on this case model.

Medium Temperature Defrost Schedule

No. Per Day	Hours
1	12 midnight
2	12 am - 12 pm
3	6 am - 2 pm - 10 pm
4	12 - 6 am - 12 - 6 pm

All measurements are taken per ARI 1200 - 2002 specifications.

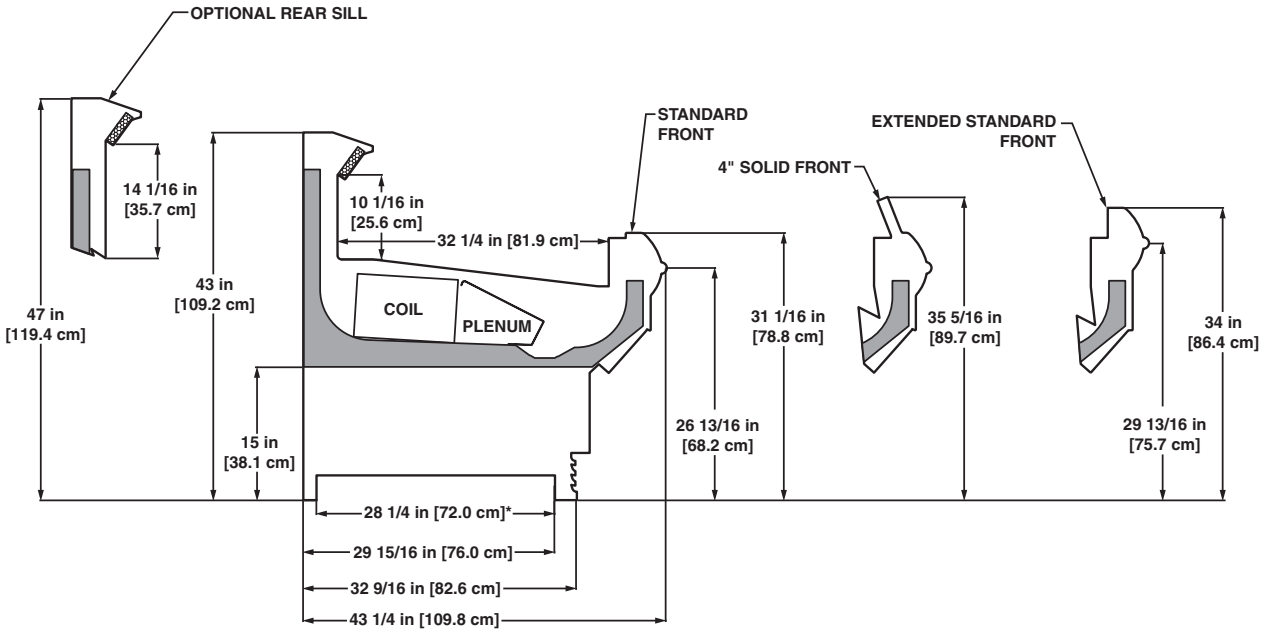

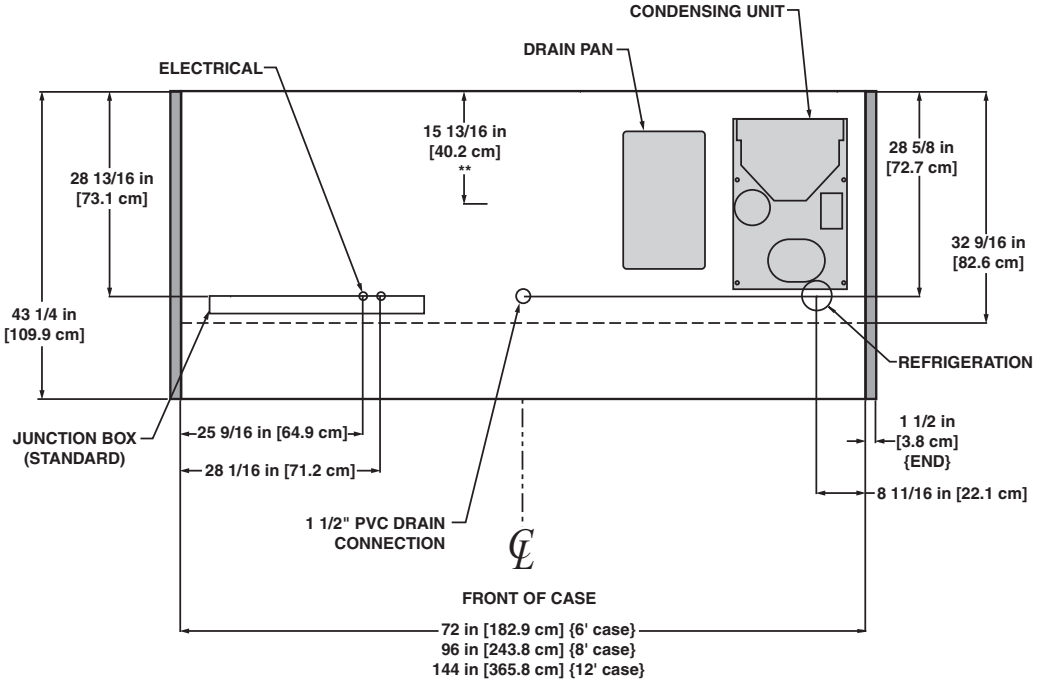

NOTES:

* STUB-UP AREA
** RECOMMENDED STUB-UP CENTERLINE FOR ELECTRICAL AND HUB DRAIN

- ENDS ADD APPROXIMATELY 1 INCH TO CASE HEIGHT
- A 2" MINIMUM AIR GAP IS REQUIRED BETWEEN THE REAR OF THE CASE AND A WALL

Wide Single Deck Produce Merchandiser

OWP - 8′ & 12′

Electrical Data

Model		Fans per Case	Standard Fans 120 Volts Amps	Standard Fans 120 Volts Watts	High Efficiency Fans 120 Volts Amps	High Efficiency Fans 120 Volts Watts	Anti-Condensate Heaters 120 Volts Amps	Anti-Condensate Heaters 120 Volts Watts	Defrost Heaters 208 Volts Amps	Defrost Heaters 208 Volts Watts	Defrost Heaters 240 Volts Amps	Defrost Heaters 240 Volts Watts
OWP	8′	2	1.00	60	0.15	9.2	0.25	30	3.85	800	4.44	1065
	12′	3	1.50	90	0.23	13.8	0.38	46	5.77	1200	6.67	1600

Lighting Data

Model		Bulbs per Row	Bulb Length	Typical per Light Row 120 Volts Amps	Typical per Light Row 120 Volts Watts	Maximum Lighting 120 Volts Amps	Maximum Lighting 120 Volts Watts
OWP	8′	2	4′	0.47	56	0.47	56
	12′	3	4′	0.70	84	0.70	84

Guidelines & Control Settings

Model	Rear Sill Heights	BTUH/ft[1]	Coil Type	Evaporator (°F)	Superheat Set Point @ Bulb (°F)	Discharge Air (°F)	Return Air (°F)	Discharge Air Velocity[3] (FPM)
OWP Cut Produce	39″	377[2]	Enh.	26	6-8	31	42	180
	43″	525[2]	Enh.	26	6-8	30	45	210
OWP Bulk Produce	39″	301[2]	Enh.	29	6-8	36	44	180
	43″	490[2]	Enh.	29	6-8	35	47	210

[1] BTUHs/ft listed are for parallel operation. Conventional ratings may be approximated by multiplying listed rating by 1.04.

[2] High efficiency fans reduce refrigeration load by 96 BTUHs/fan.

[3] Average discharge air velocity at peak of defrost.

Defrost Controls

Model	Defrosts Per Day	Run-Off Time (min)	Electric Defrost Fail-safe (min)	Electric Defrost Termination Temp. (°F)	Timed Off Defrost Fail-safe (min)	Timed Off Defrost Termination Temp. (°F)	Hot Gas Defrost Fail-safe (min)	Hot Gas Defrost Termination Temp. (°F)	Reverse Air Defrost Fail-safe (min)	Reverse Air Defrost Termination Temp. (°F)
OWP	2	6 - 8	40	49	60	47	26	45	40	45

Medium Temperature Defrost Schedule

No. Per Day	Hours
1	12 midnight
2	12 am - 12 pm
3	6 am - 2 pm - 10 pm
4	12 - 6 am - 12 - 6 pm

All measurements are taken per ARI 1200 - 2002 specifications.

6/07

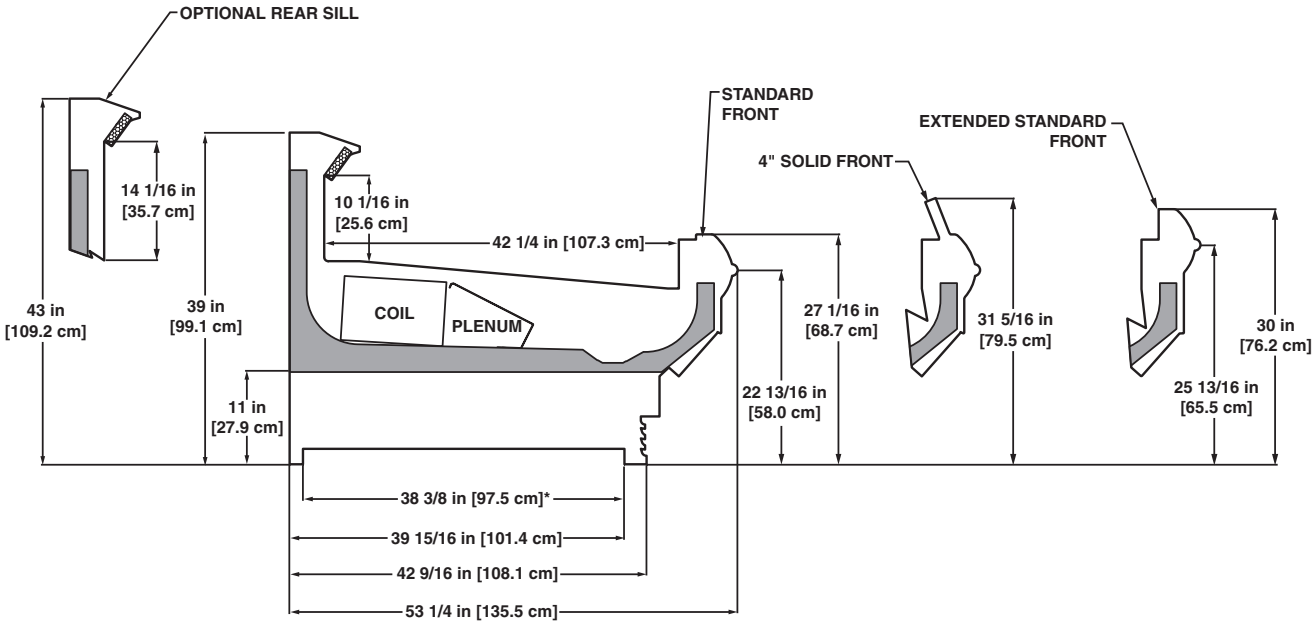

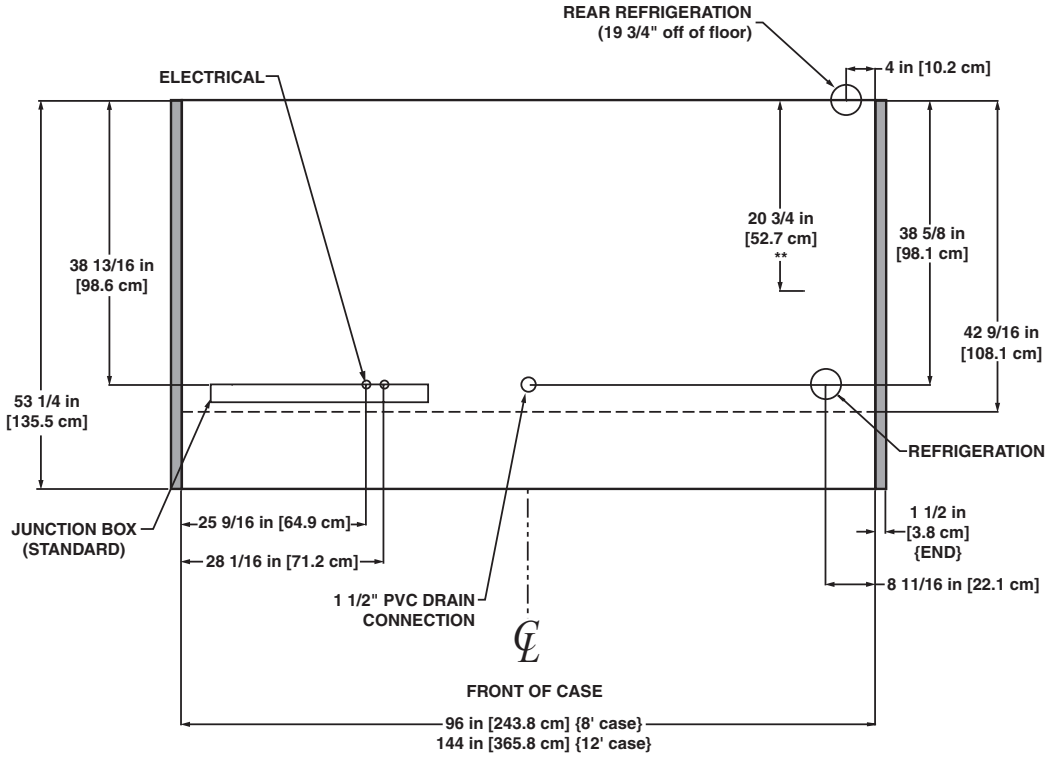

NOTES:

* STUB-UP AREA
** RECOMMENDED STUB-UP CENTERLINE FOR ELECTRICAL AND HUB DRAINS

- FRONT AND REAR SILL HEIGHTS VARY WITH BASEFRAME HEIGHT
- ENDS ADD APPROXIMATELY 1 INCH TO CASE HEIGHT
- A 2" MINIMUM AIR GAP IS REQUIRED BETWEEN THE REAR OF THE CASE AND A WALL
- SUCTION LINE - 5/8", LIQUID LINE - 3/8"

NSF COMPONENT c UL us

A DOVER COMPANY

Wide Single Deck Produce Self-Contained Merchandiser

OWPA - 8′

System Requirements

Model		Volts	Phase	Hz	Wire	Minimum Circuit Ampacity	Maximum Overcurrent Protection
OWPA	8′	120	1	60	2 wire + ground	22.49	40

Electrical Data

Model		Fans per Case	Standard Fans		Condenser Fan		Anti-Condensate Heaters		Defrost Heaters		Drain Heater	
			120 Volts		120 Volts		120 Volts		120 Volts		120 Volts	
			Amps	Watts	Amps	Watts	Amps	Watts	Amps	Watts	Amps	Watts
OWPA	8′	2	1.00	60	0.82	49	0.25	30	6.67	800	4.17	500

Guidelines & Control Settings

Model	24 hr Energy Usage (kWh)	Suction Pressure @ Case Outlet (psig)	Superheat Set Point @ Bulb (°F)	Discharge Air (°F)	Return Air (°F)	Discharge Air Velocity[1] (FPM)
OWPA-8′		19.9	6-8	30	45	210

[1] Average discharge air velocity at peak of defrost.

Condensing Unit Data

Model	Volts	Phase	Frequency (Hz)	HP	RLA[2] (amps)	LRA[3] (amps)	Refrig.	lbs of Refrig.
OWPA-8′	120	1	60	1/2	12.9	66.3	R134A	

[2] RLA - Running Load Amps.
[3] LRA - Locked Rotor Amps.

Defrost Controls

Model	Defrosts Per Day	Electric Defrost		Timed Off Defrost		Hot Gas Defrost		Reverse Air Defrost	
		Fail-safe (min)	Termination Temp. (°F)	Fail-safe (min)	Termination Temp. (°F)	Fail-safe (min)	Termination Temp. (°F)	Fail-safe (min)	Termination Temp. (°F)
OWPA	2	40	47	60	47	- - - [4]	- - -	- - -	- - -

[4] NOTE: - - - not an option on this case model.

Medium Temperature Defrost Schedule

No. Per Day	Hours
1	12 midnight
2	12 am - 12 pm
3	6 am - 2 pm - 10 pm
4	12 - 6 am - 12 - 6 pm

All measurements are taken per ARI 1200 - 2002 specifications.

NSF COMPONENT

c UL us

Hill PHOENIX EXCELLENCE

A DOVER COMPANY

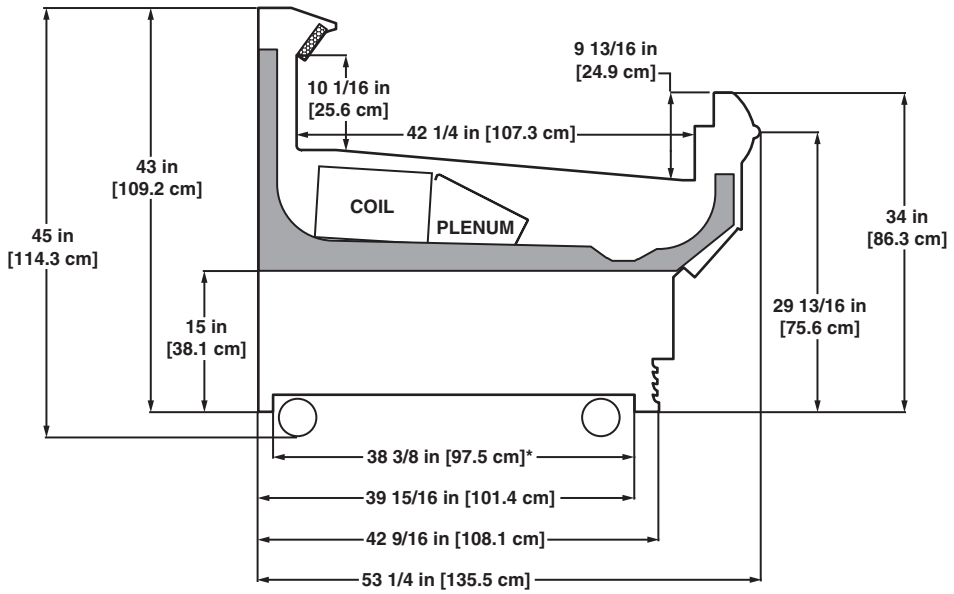

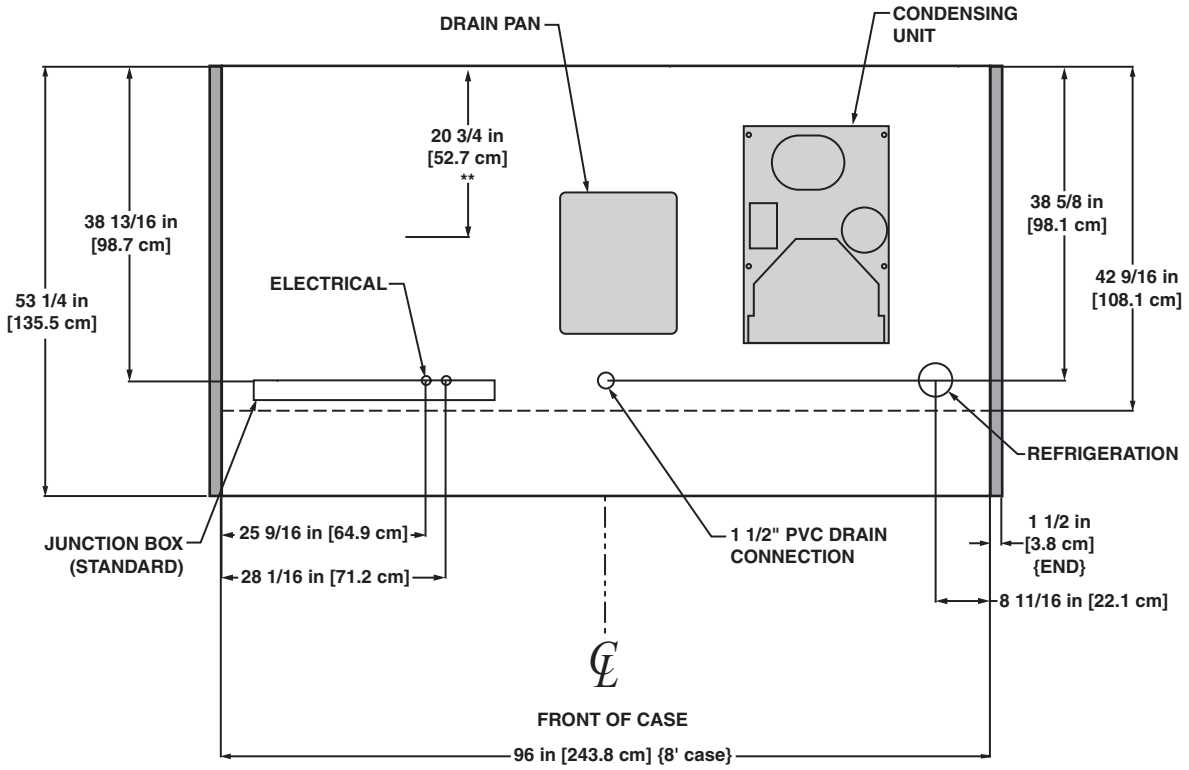

NOTES:

* STUB-UP AREA
** RECOMMENDED STUB-UP CENTERLINE FOR ELECTRICAL AND HUB DRAIN

- ENDS ADD APPROXIMATELY 1 INCH TO CASE HEIGHT
- A 2" MINIMUM AIR GAP IS REQUIRED BETWEEN THE REAR OF THE CASE AND A WALL

NSF COMPONENT c UL us

A DOVER™ COMPANY

UTILITY

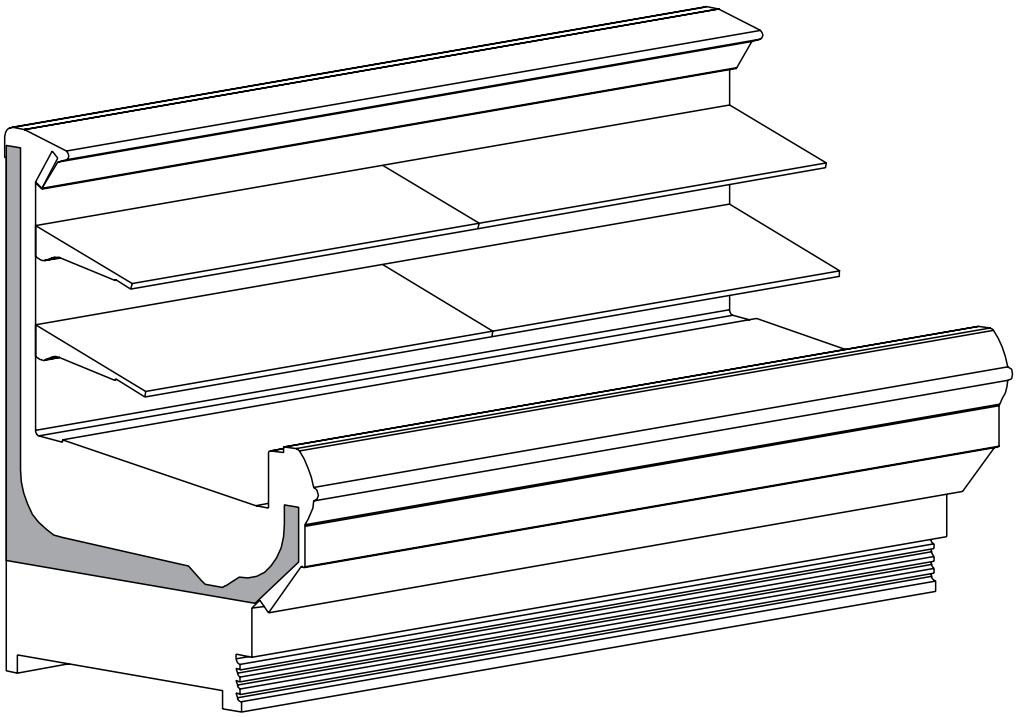

Notes:

- **Cases comply with ANSI / NSF* Standard 7 unless otherwise specified. Units marked as c o m - ponents require remote refrigeration.**
- **Allow for an extra 1/8" per joint when lining up merchandisers.**
- **Front sill height does not affect case performance unless specifically shown.**
- **Front and rear sill heights vary with baseframe height.**

* ANSI - American National Standard Institute
NSF - National Sanitation Foundation

Narrow Multi-Deck Dome Deli Merchandiser

ONUMD - 4′, 6′, 8′ & 12′

Electrical Data

Model		Fans per Case		Ambient[1] Fans		Standard Fans		High Efficiency Fans		Anti-Condensate Heaters		Defrost Heaters			
				120 Volts		120 Volts		120 Volts		120 Volts		208 Volts		240 Volts	
		Pri.	Amb.	Amps	Watts	Amps	Watts	Amps	Watts	Amps	Watts	Amps	Watts	Amps	Watts
ONUMD	4′	2	2	0.20	11	1.00	60	0.47	28	0.14	17	1.92	400	2.22	532
	6′	2	2	0.20	11	1.00	60	0.47	28	0.20	24	2.88	600	3.33	798
	8′	3	4	0.40	22	1.50	90	0.70	42	0.25	30	3.85	800	4.44	1065
	12′	4	6	0.60	33	2.00	120	0.93	56	0.38	46	5.77	1200	6.67	1600

[1] Ambient fans are standard equipment for this case model. The primary fans can either be standard or high efficiency.

Lighting Data

Model		Bulbs per Row	Bulb Length	Typical per Light Row		Maximum Lighting	
				120 Volts		120 Volts	
				Amps	Watts	Amps	Watts
ONUMD	4′	1	4′	0.23	28	0.70	84
	6′	2	3′	0.37	44	1.10	132
	8′	2	4′	0.47	56	1.40	168
	12′	3	4′	0.70	84	2.10	252

Electrical Data (Continued)

Model		Secondary[2] Fans	
		120 Volts	
		Amps	Watts
ONUMD	4′	2.19	158
	6′	2.19	158
	8′	2.19	158
	12′	2.19	158

[2] Secondary Fans are for the Bohn unit on the rear coil.

Guidelines & Control Settings

Model	BTUH/ft³	Coil Type	Evaporator (°F)	Superheat Set Point @ Bulb (°F)	Discharge Air (°F)	Return Air (°F)	Discharge Air Velocity[5] (FPM)
ONUMD	1390[4]	Enh.	22	6-8	29	40	250

[3] BTUHs/ft listed are for parallel operation. Conventional ratings may be approximated by multiplying listed rating by 1.04.

[4] High efficiency fans reduce refrigeration load by 96 BTUHs/fan.

[5] Average discharge air velocity at peak of defrost.

Defrost Controls

Model	Defrosts Per Day	Run-Off Time (min)	Electric Defrost		Timed Off Defrost		Hot Gas Defrost		Reverse Air Defrost	
			Fail-safe (min)	Termination Temp. (°F)	Fail-safe (min)	Termination Temp. (°F)	Fail-safe (min)	Termination Temp. (°F)	Fail-safe (min)	Termination Temp. (°F)
ONUMD	3	6 - 8	40	47	50	45	26	45	- - -[6]	- - -

[6] NOTE: - - - not an option on this case model.

Medium Temperature Defrost Schedule

No. Per Day	Hours
1	12 midnight
2	12 am - 12 pm
3	6 am - 2 pm - 10 pm
4	12 - 6 am - 12 - 6 pm

All measurements are taken per ARI 1200 - 2002 specifications.

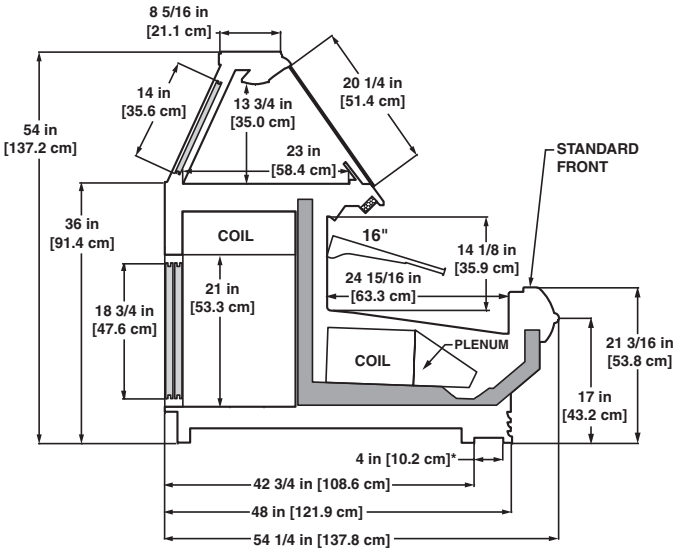

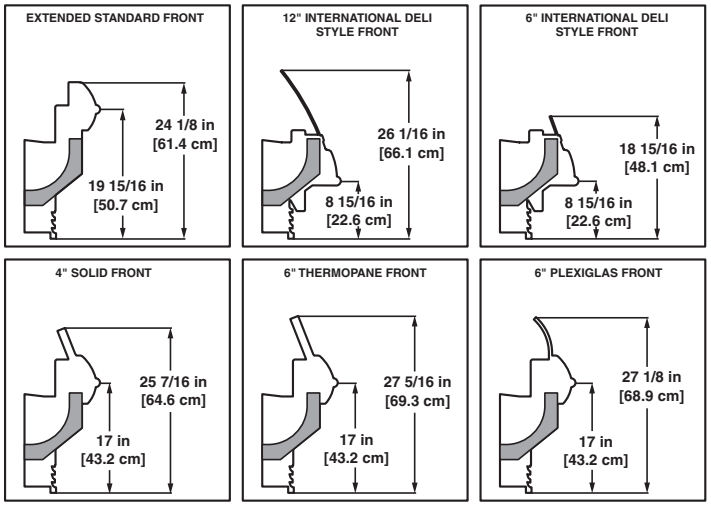

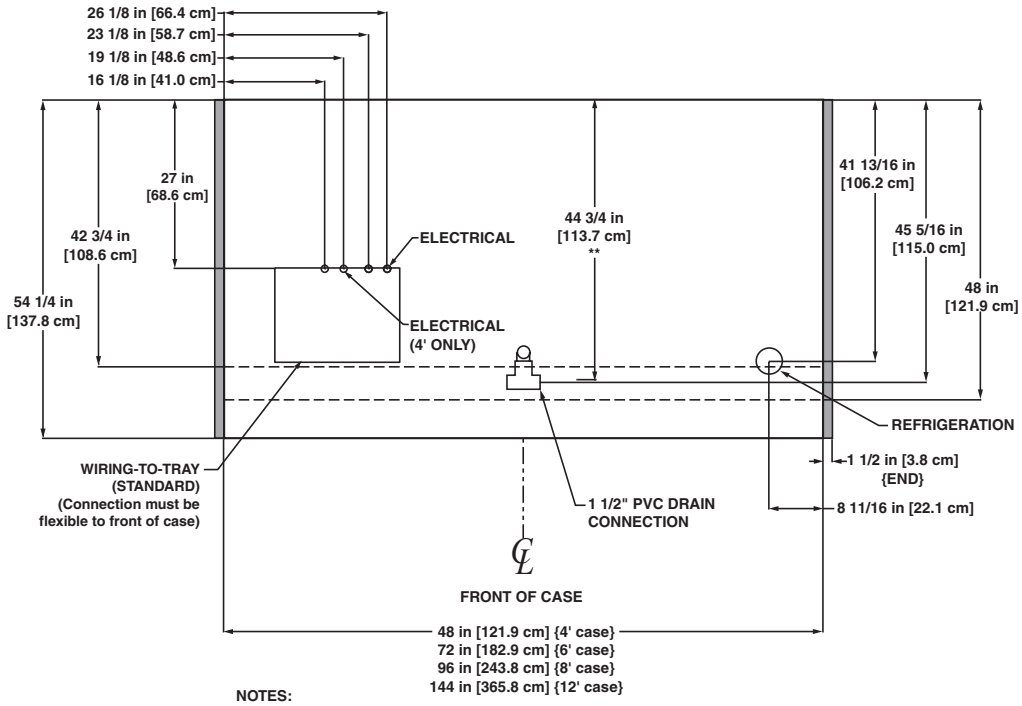

NOTES:

* STUB-UP AREA
** RECOMMENDED STUB-UP CENTERLINE FOR ELECTRICAL AND HUB DRAINS

- FRONT AND REAR SILL HEIGHT VARY WITH BASEFRAME HEIGHT
- SUCTION LINE (4' & 6') - 5/8", SUCTION LINE (8' & 12') - 7/8", LIQUID LINE (ALL LENGTHS) - 3/8"
- AVAILABLE SHELF SIZES: 10", 12", 14" & 16"
- PRODUCT ON TOP SHELF SHOULD BE 3" BELOW DISCHARGE
- RECOMMENDED SHELF CONFIGURATION IN ROWS: 1 - 16"

Narrow Multi-Deck Produce/Dairy/Deli/Meat/Seafood Merchandiser

ONUM - 4′, 6′, 8′ & 12′

Electrical Data

Model		Fans per Case	Standard Fans 120 Volts Amps	Standard Fans 120 Volts Watts	High Efficiency Fans 120 Volts Amps	High Efficiency Fans 120 Volts Watts	Anti-Condensate Heaters[1] 120 Volts Amps	Anti-Condensate Heaters[1] 120 Volts Watts	Defrost Heaters 208 Volts Amps	Defrost Heaters 208 Volts Watts	Defrost Heaters 240 Volts Amps	Defrost Heaters 240 Volts Watts
ONUM	4′	2	1.00	60	0.15	9.2	0.14[1]	17	1.92	400	2.22	532
	6′	2	1.00	60	0.15	9.2	0.20[1]	24	2.88	600	3.33	798
	8′	3	1.50	90	0.23	13.8	0.25[1]	30	3.85	800	4.44	1065
	12′	4	2.00	120	0.31	18.4	0.38[1]	46	5.77	1200	6.67	1600

[1] Anti-condensate heater data for unlighted rear sill. For lighted rear sill, double the values.

Lighting Data

Model		Bulbs per Row	Bulb Length	Typical per Light Row 120 Volts Amps	Typical per Light Row 120 Volts Watts	Maximum Lighting 120 Volts Amps	Maximum Lighting 120 Volts Watts
ONUM	4′	1	4′	0.23	28	0.70	84
	6′	2	3′	0.37	44	1.10	132
	8′	2	4′	0.47	56	1.40	168
	12′	3	4′	0.70	84	2.10	252

Guidelines & Control Settings

Model[2]	BTUH/ft[3]	Coil Type	Evaporator (°F)	Superheat Set Point @ Bulb (°F)	Discharge Air (°F)	Return Air (°F)	Discharge Air Velocity[5] (FPM)
ONUM	530[4]	Enh.	22	6-8	28	35	280

[2] Model ONUM only available for meat application with a thermopane glass front or a curved plexiglas front.

[3] BTUHs/ft listed are for parallel operation. Conventional ratings may be approximated by multiplying listed rating by 1.04.

[4] High efficiency fans reduce refrigeration load by 96 BTUHs/fan

[5] Average discharge air velocity at peak of defrost.

Defrost Controls

Model	Defrosts Per Day	Run-Off Time (min)	Electric Defrost Fail-safe (min)	Electric Defrost Termination Temp. (°F)	Timed Off Defrost Fail-safe (min)	Timed Off Defrost Termination Temp. (°F)	Hot Gas Defrost Fail-safe (min)	Hot Gas Defrost Termination Temp. (°F)	Reverse Air Defrost Fail-safe (min)	Reverse Air Defrost Termination Temp. (°F)
ONUM	3	6 - 8	40	47	45	45	26	45	45	45

Medium Temperature Defrost Schedule

No. Per Day	Hours
1	12 midnight
2	12 am - 12 pm
3	6 am - 2 pm - 10 pm
4	12 - 6 am - 12 - 6 pm

All measurements are taken per ARI 1200 - 2002 specifications.

NSF COMPONENT
c UL us
Hill PHOENIX EXCELLENCE
A DOVER COMPANY

(for additional rear sill options refer to the Merchandisers Accessories Guide)

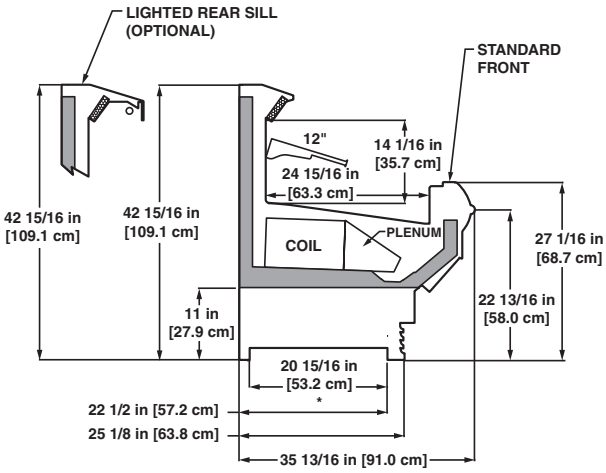

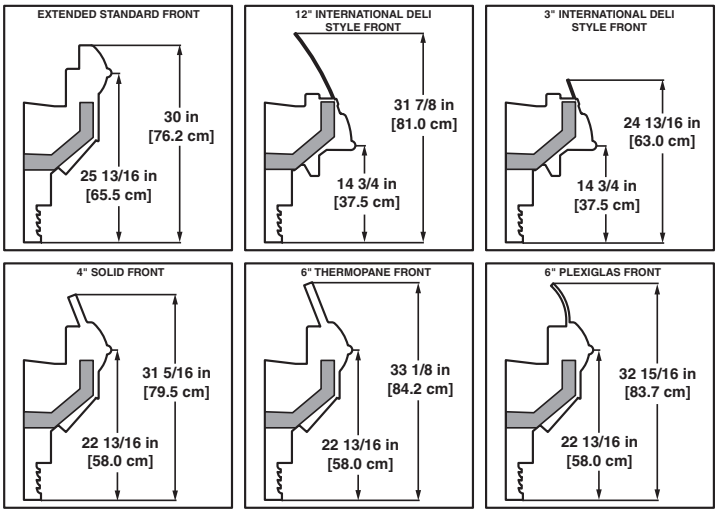

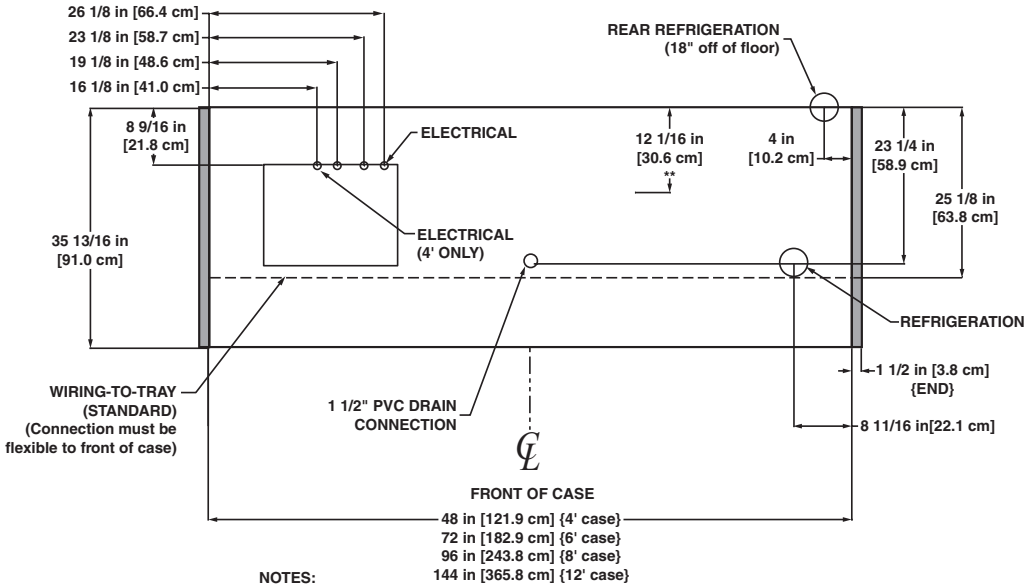

NOTES:

* STUB-UP AREA
** RECOMMENDED STUB-UP CENTERLINE FOR ELECTRICAL AND HUB DRAINS

- FRONT AND REAR SILL HEIGHTS VARY WITH BASEFRAME HEIGHT
- ENDS ADD APPROXIMATELY 1 INCH TO CASE HEIGHT
- A 2" MINIMUM AIR GAP IS REQUIRED BETWEEN THE REAR OF THE CASE AND A WALL
- SUCTION LINE (4' & 6') - 1/2", SUCTION LINE (8' & 12') - 5/8", LIQUID LINE (ALL LENGTHS) - 3/8"
- AVAILABLE SHELF SIZES: 10", 12", 14" & 16"
- PRODUCT ON TOP SHELF SHOULD BE 3" BELOW DISCHARGE
- RECOMMENDED SHELF CONFIGURATION IN ROWS: 1-12"

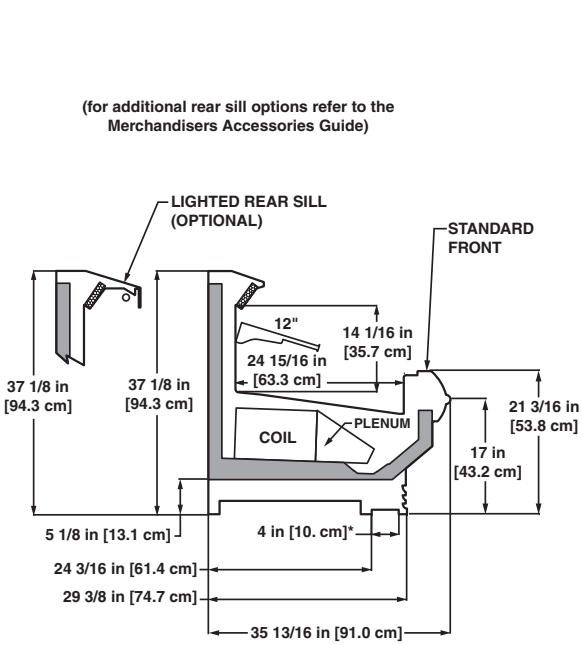

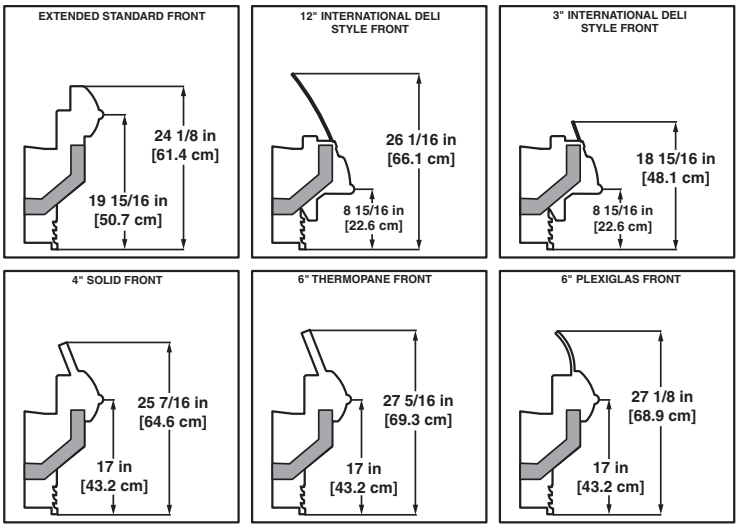

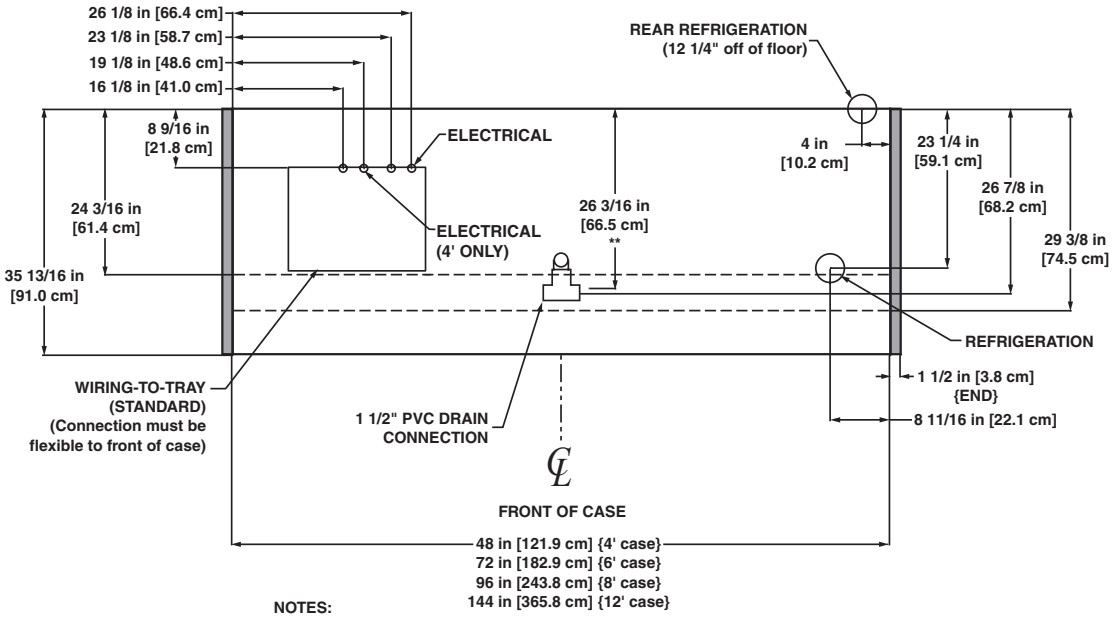

NOTES:

* STUB-UP AREA
** RECOMMENDED STUB-UP CENTERLINE FOR ELECTRICAL AND HUB DRAINS

- FRONT AND REAR SILL HEIGHTS VARY WITH BASEFRAME HEIGHT
- ENDS ADD APPROXIMATELY 1 INCH TO CASE HEIGHT
- A 2" MINIMUM AIR GAP IS REQUIRED BETWEEN THE REAR OF THE CASE AND A WALL
- SUCTION LINE (4' & 6') - 1/2", SUCTION LINE (8' & 12') - 5/8", LIQUID LINE (ALL LENGTHS) - 3/8"
- AVAILABLE SHELF SIZES: 10", 12", 14" & 16"
- PRODUCT ON TOP SHELF SHOULD BE 3" BELOW DISCHARGE
- RECOMMENDED SHELF CONFIGURATION IN ROWS: 1-12"

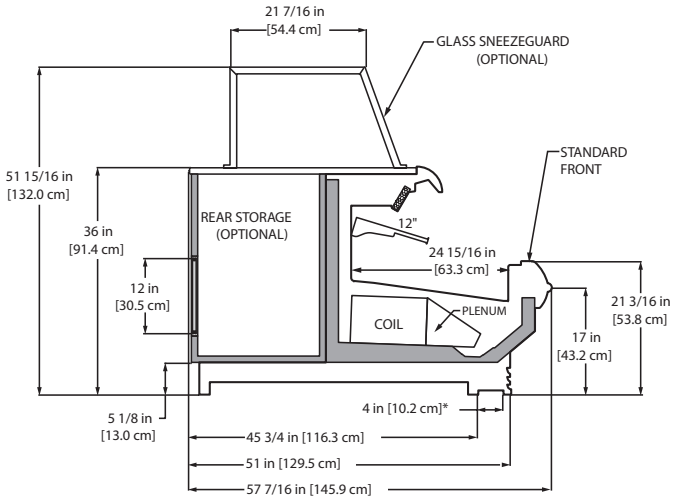

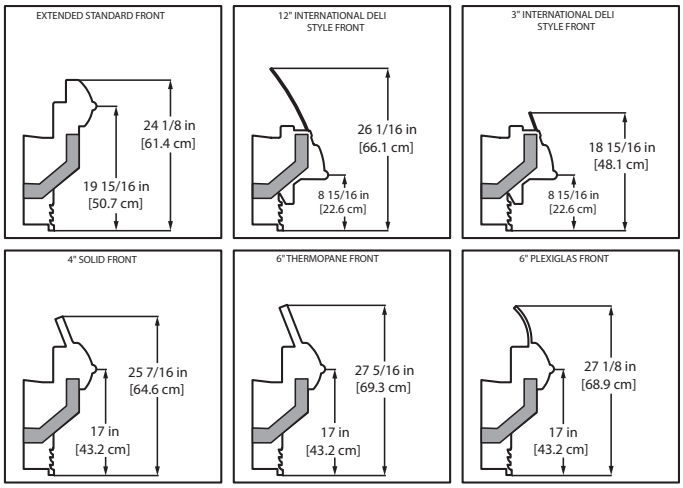

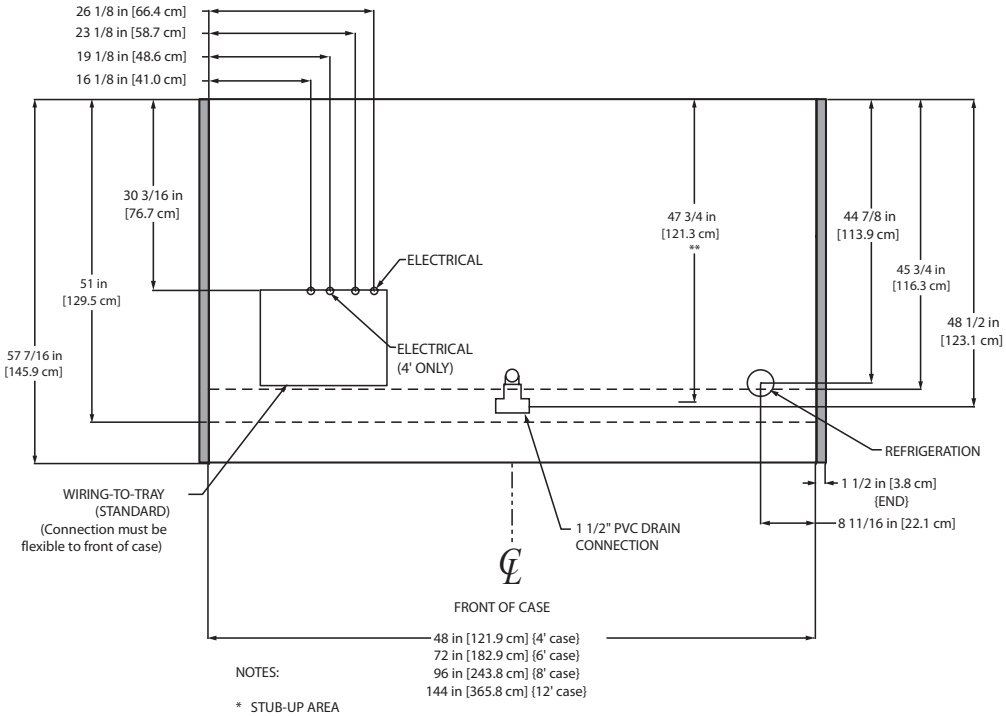

NOTES:

* STUB-UP AREA

** RECOMMENDED STUB-UP CENTERLINE FOR ELECTRICAL AND HUB DRAINS

- FRONT AND REAR SILL HEIGHTS VARY WITH BASEFRAME HEIGHT
- ENDS ADD APPROXIMATELY 1 INCH TO CASE HEIGHT
- SUCTION LINE (4' & 6') - 1/2", SUCTION LINE (8' & 12') - 5/8", LIQUID LINE (ALL LENGTHS) - 3/8"
- AVAILABLE SHELF SIZES: 10", 12", 14" & 16"
- PRODUCT ON TOP SHELF SHOULD BE 3" BELOW DISCHARGE
- RECOMMENDED SHELF CONFIGURATION IN ROWS: 1-12"

Multi-Deck Produce/Dairy/Deli/Meat/Seafood Merchandiser

OUM - 4′, 6′, 8′ & 12′

Electrical Data

Model		Fans per Case	Standard Fans 120 Volts Amps	Standard Fans 120 Volts Watts	High Efficiency Fans 120 Volts Amps	High Efficiency Fans 120 Volts Watts	Anti-Condensate Heaters[1] 120 Volts Amps	Anti-Condensate Heaters[1] 120 Volts Watts	Defrost Heaters 208 Volts Amps	Defrost Heaters 208 Volts Watts	Defrost Heaters 240 Volts Amps	Defrost Heaters 240 Volts Watts
OUM	4′	2	1.00	60	0.15	9.2	0.14[1]	17	1.92	400	2.22	532
	6′	2	1.00	60	0.15	9.2	0.20[1]	24	2.88	600	3.33	798
	8′	3	1.50	90	0.23	13.8	0.25[1]	30	3.85	800	4.44	1065
	12′	4	2.00	120	0.31	18.4	0.38[1]	46	5.77	1200	6.67	1600

[1] Anti-condensate heater data for unlighted rear sill. For lighted rear sill, double the values.

Lighting Data

Model		Bulbs per Row	Bulb Length	Typical per Light Row 120 Volts Amps	Typical per Light Row 120 Volts Watts	Maximum Lighting 120 Volts Amps	Maximum Lighting 120 Volts Watts
OUM	4′	1	4′	0.23	28	0.70	84
	6′	2	3′	0.37	44	1.10	132
	8′	2	4′	0.47	56	1.40	168
	12′	3	4′	0.70	84	2.10	252

Guidelines & Control Settings

Model[2]	BTUH/ft[3]	Coil Type	Evaporator (°F)	Superheat Set Point @ Bulb (°F)	Discharge Air (°F)	Return Air (°F)	Discharge Air Velocity[5] (FPM)
OUM	810[4]	Enh.	22	6-8	27	40	340

[2] Model OUM only available for meat application with a thermopane glass front or a curved plexiglas front.

[3] BTUHs/ft listed are for parallel operation. Conventional ratings may be approximated by multiplying listed rating by 1.04.

[4] High efficiency fans reduce refrigeration load by 96 BTUHs/fan

[5] Average discharge air velocity at peak of defrost.

Defrost Controls

Model	Defrosts Per Day	Run-Off Time (min)	Electric Defrost Fail-safe (min)	Electric Defrost Termination Temp. (°F)	Timed Off Defrost Fail-safe (min)	Timed Off Defrost Termination Temp. (°F)	Hot Gas Defrost Fail-safe (min)	Hot Gas Defrost Termination Temp. (°F)	Reverse Air Defrost Fail-safe (min)	Reverse Air Defrost Termination Temp. (°F)
OUM	3	6 - 8	40	47	45	45	26	45	45	45

Medium Temperature Defrost Schedule

No. Per Day	Hours
1	12 midnight
2	12 am - 12 pm
3	6 am - 2 pm - 10 pm
4	12 - 6 am - 12 - 6 pm

All measurements are taken per ARI 1200 - 2002 specifications.

NSF COMPONENT
c UL us
Hill PHOENIX EXCELLENCE
A DOVER COMPANY

(for additional rear sill options refer to the Merchandisers Accessories Guide)

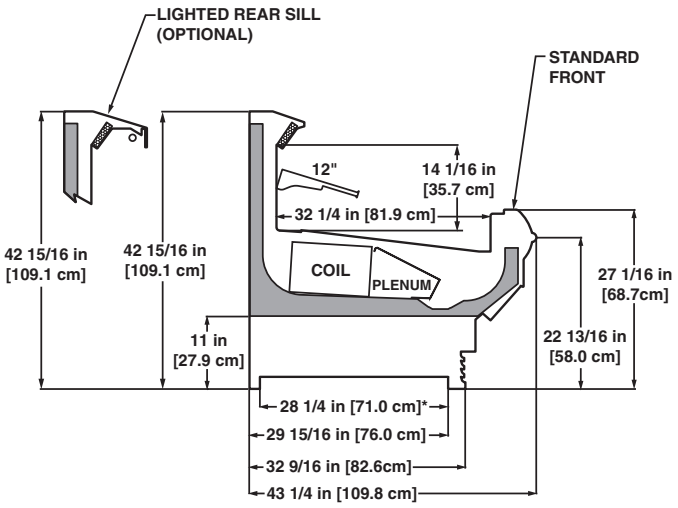

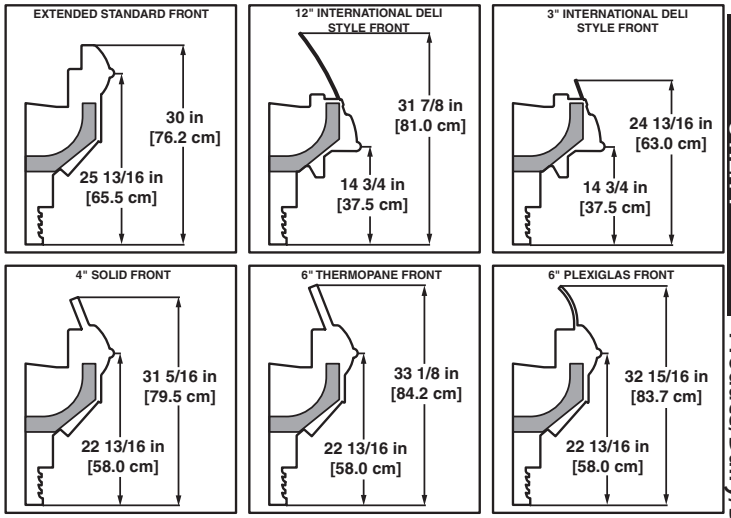

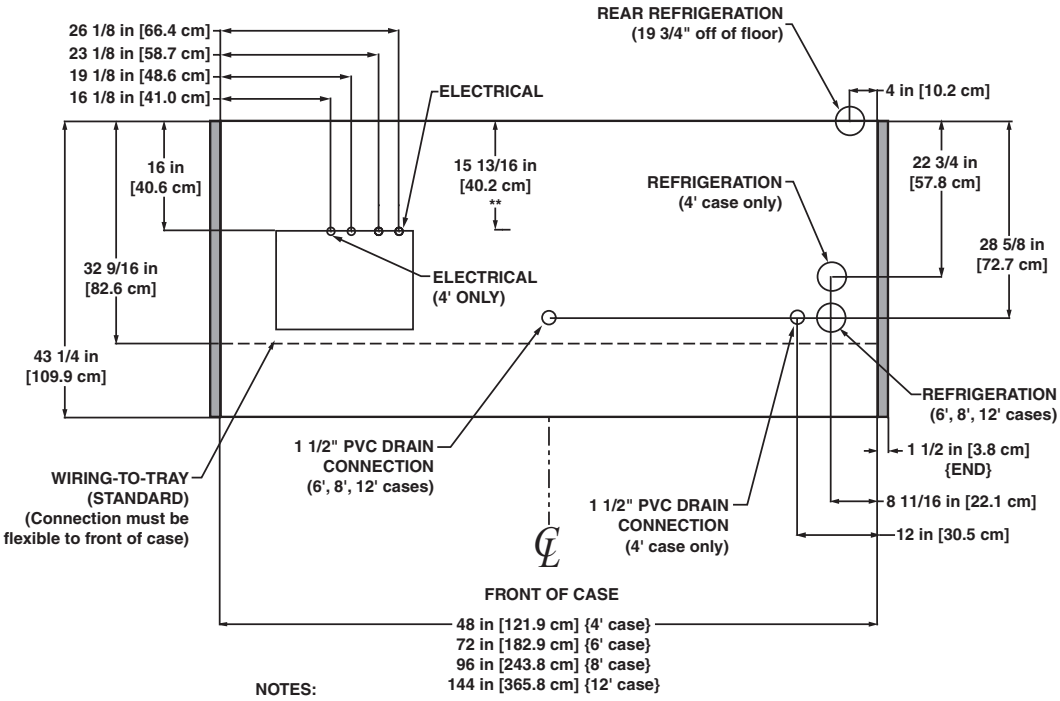

NOTES:

* STUB-UP AREA
** RECOMMENDED STUB-UP CENTERLINE FOR ELECTRICAL AND HUB DRAINS

- FRONT AND REAR SILL HEIGHTS VARY WITH BASEFRAME HEIGHT
- ENDS ADD APPROXIMATELY 1 INCH TO CASE HEIGHT
- A 2" MINIMUM AIR GAP IS REQUIRED BETWEEN THE REAR OF THE CASE AND A WALL
- SUCTION LINE (4' & 6') - 1/2", SUCTION LINE (8' & 12') - 5/8", LIQUID LINE (ALL LENGTHS) - 3/8"
- AVAILABLE SHELF SIZES: 10", 12", 14" & 16"
- PRODUCT ON TOP SHELF SHOULD BE 3" BELOW DISCHARGE
- RECOMMENDED SHELF CONFIGURATION IN ROWS: 1-12"

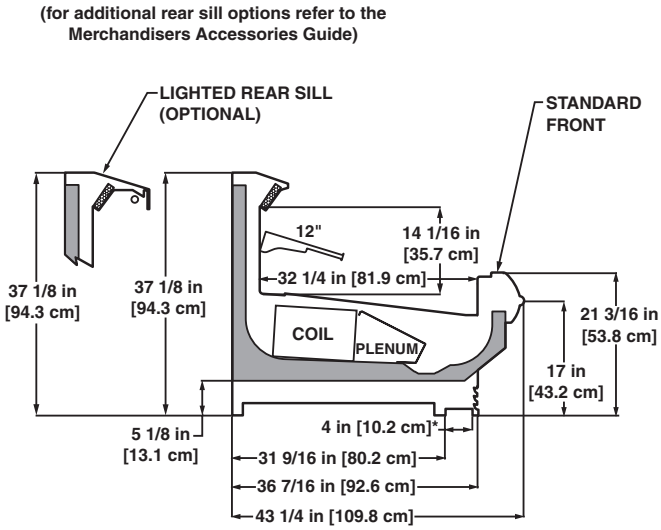

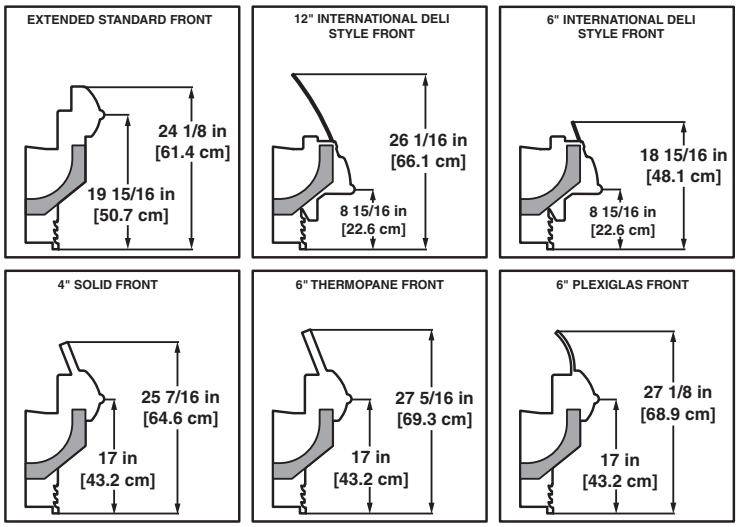

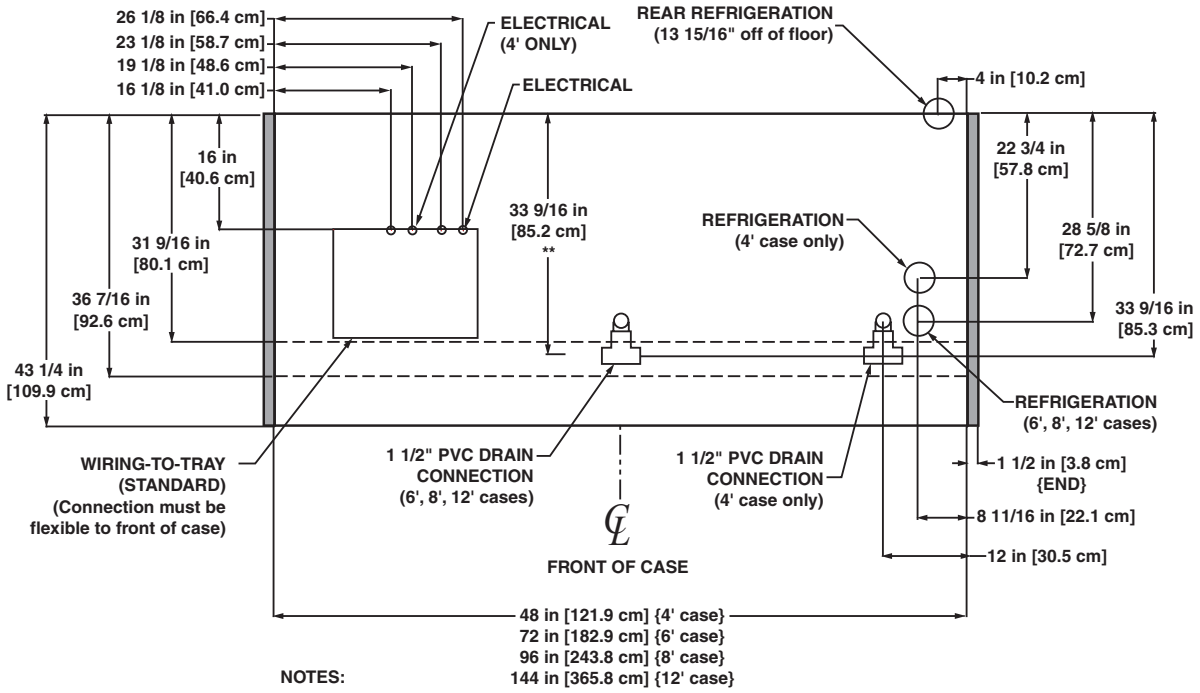

NOTES:

* STUB-UP AREA
** RECOMMENDED STUB-UP CENTERLINE FOR ELECTRICAL AND HUB DRAINS

- FRONT AND REAR SILL HEIGHTS VARY WITH BASEFRAME HEIGHT
- ENDS ADD APPROXIMATELY 1 INCH TO CASE HEIGHT
- A 2" MINIMUM AIR GAP IS REQUIRED BETWEEN THE REAR OF THE CASE AND A WALL
- SUCTION LINE (4' & 6') - 1/2", SUCTION LINE (8' & 12') - 5/8", LIQUID LINE (ALL LENGTHS) - 3/8"
- AVAILABLE SHELF SIZES: 10", 12", 14" & 16"
- PRODUCT ON TOP SHELF SHOULD BE 3" BELOW DISCHARGE
- RECOMMENDED SHELF CONFIGURATION IN ROWS: 1-12"

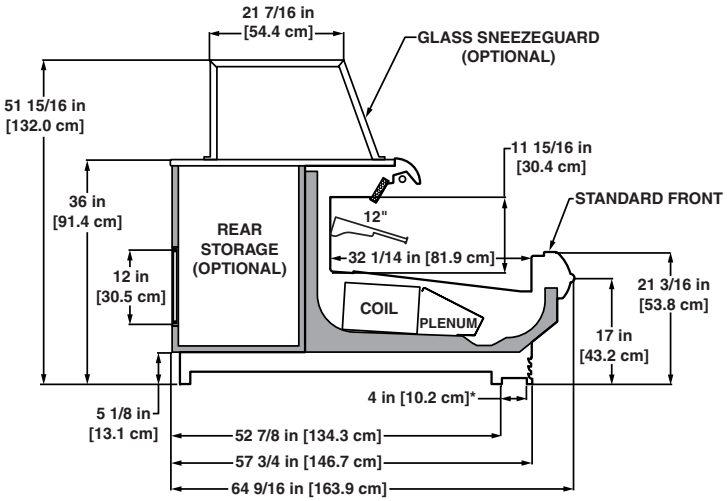

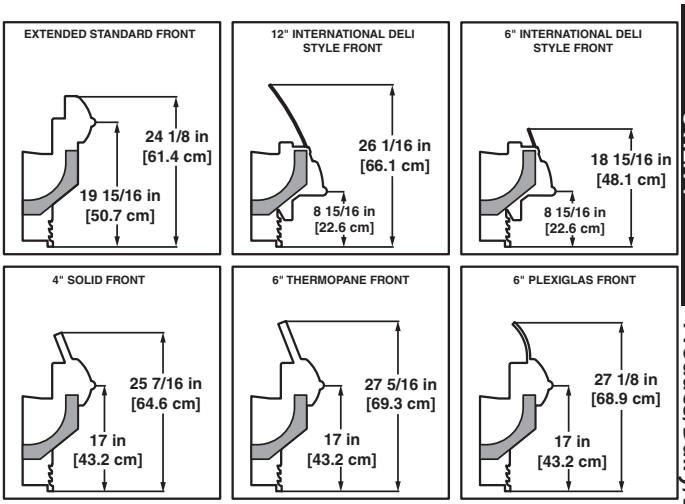

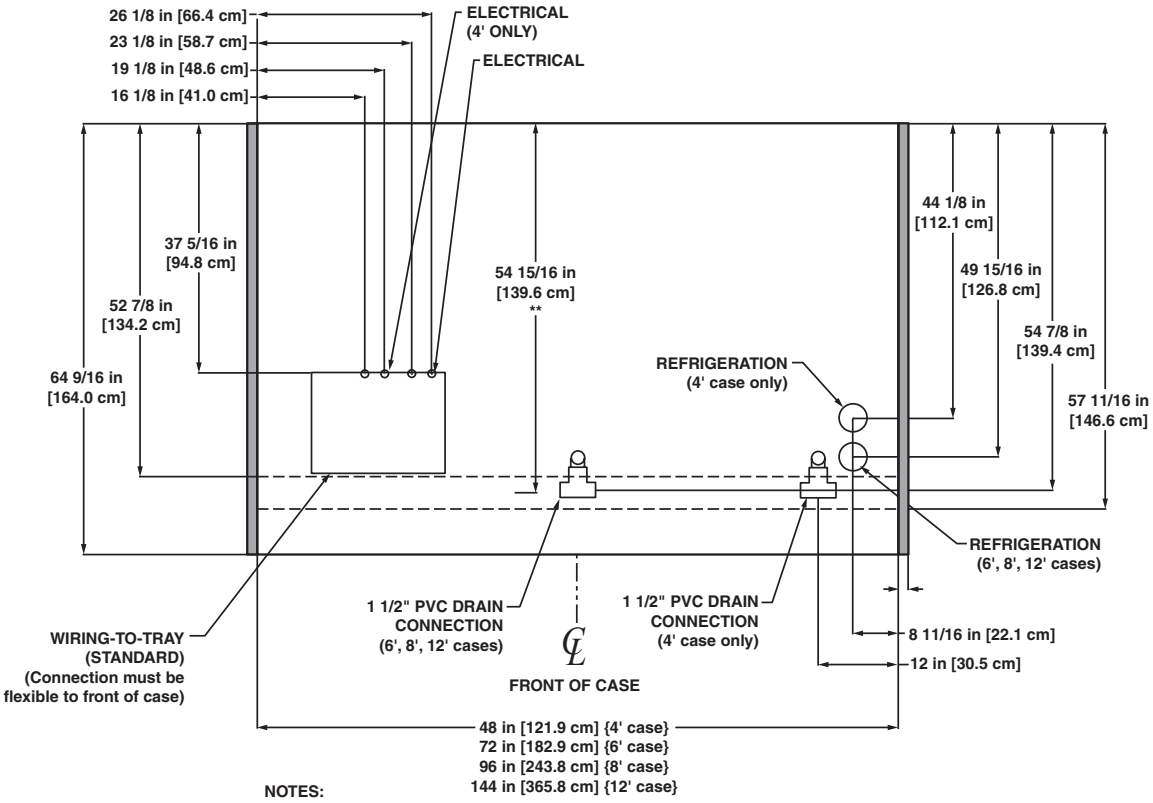

NOTES:

* STUB-UP AREA
** RECOMMENDED STUB-UP CENTERLINE FOR ELECTRICAL AND HUB DRAINS

- FRONT AND REAR SILL HEIGHTS VARY WITH BASEFRAME HEIGHT
- ENDS ADD APPROXIMATELY 1 INCH TO CASE HEIGHT
- SUCTION LINE (4' & 6') - 1/2", SUCTION LINE (8' & 12') - 5/8", LIQUID LINE (ALL LENGTHS) - 3/8"
- AVAILABLE SHELF SIZES: 10", 12", 14" & 16"
- PRODUCT ON TOP SHELF SHOULD BE 3" BELOW DISCHARGE
- RECOMMENDED SHELF CONFIGURATION IN ROWS: 1-12"

NSF COMPONENT
c UL us
A DOVER COMPANY

Narrow Multi-Deck Produce/Dairy/Deli/Meat/Seafood Merchandiser

ON2UM - 4′, 6′, 8′ & 12′

Electrical Data

Model		Fans per Case	Standard Fans		High Efficiency Fans		Anti-Condensate Heaters[1]		Defrost Heaters			
			120 Volts		120 Volts		120 Volts		208 Volts		240 Volts	
			Amps	Watts	Amps	Watts	Amps	Watts	Amps	Watts	Amps	Watts
ON2UM	4′	2	1.00	60	0.15	9.2	0.14[1]	17	1.92	400	2.22	532
	6′	2	1.00	60	0.15	9.2	0.20[1]	24	2.88	600	3.33	798
	8′	3	1.50	90	0.23	13.8	0.25[1]	30	3.85	800	4.44	1065
	12′	4	2.00	120	0.31	18.4	0.38[1]	46	5.77	1200	6.67	1600

[1] Anti-condensate heater data for unlighted rear sill. For lighted rear sill, double the values.

Lighting Data

Model		Bulbs per Row	Bulb Length	Typical per Light Row		Maximum Lighting	
				120 Volts		120 Volts	
				Amps	Watts	Amps	Watts
ON2UM	4′	1	4′	0.23	28	0.70	84
	6′	2	3′	0.37	44	1.10	132
	8′	2	4′	0.47	56	1.40	168
	12′	3	4′	0.70	84	2.10	252

Guidelines & Control Settings

Model[2]	BTUH/ft[3]	Coil Type	Evaporator (°F)	Superheat Set Point @ Bulb (°F)	Discharge Air (°F)	Return Air (°F)	Discharge Air Velocity[5] (FPM)
ON2UM	657[4]	Enh.	22	6-8	28	35	280

[2] Model ON2UM only available for meat application with a thermopane glass front or a curved plexiglas front.

[3] BTUHs/ft listed are for parallel operation. Conventional ratings may be approximated by multiplying listed rating by 1.04.

[4] High efficiency fans reduce refrigeration load by 96 BTUHs/fan.

[5] Average discharge air velocity at peak of defrost.

Defrost Controls

Model	Defrosts Per Day	Run-Off Time (min)	Electric Defrost		Timed Off Defrost		Hot Gas Defrost		Reverse Air Defrost	
			Fail-safe (min)	Termination Temp. (°F)	Fail-safe (min)	Termination Temp. (°F)	Fail-safe (min)	Termination Temp. (°F)	Fail-safe (min)	Termination Temp. (°F)
ON2UM	3	6 - 8	40	47	45	45	26	45	45	45

Medium Temperature Defrost Schedule

No. Per Day	Hours
1	12 midnight
2	12 am - 12 pm
3	6 am - 2 pm - 10 pm
4	12 - 6 am - 12 - 6 pm

All measurements are taken per ARI 1200 - 2002 specifications.

NSF COMPONENT

c UL us

Hill PHOENIX EXCELLENCE

A DOVER COMPANY

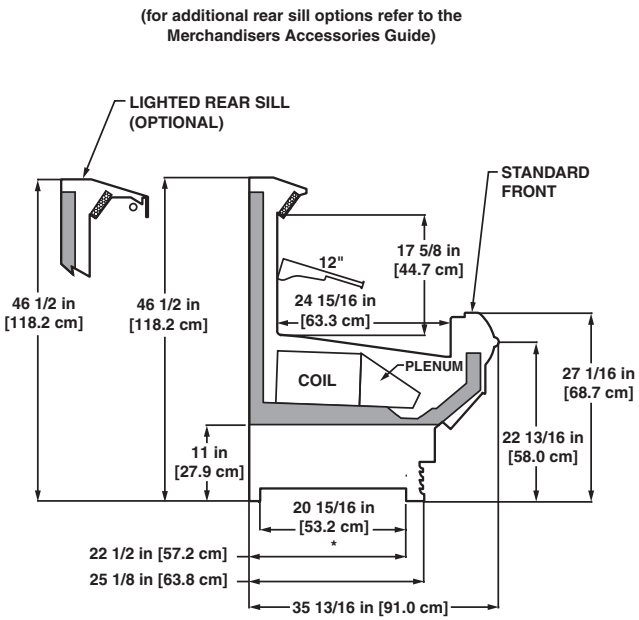

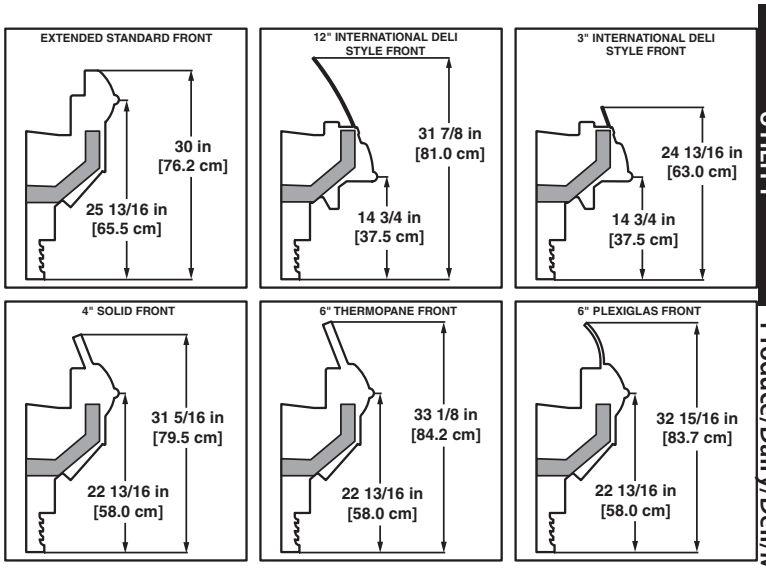

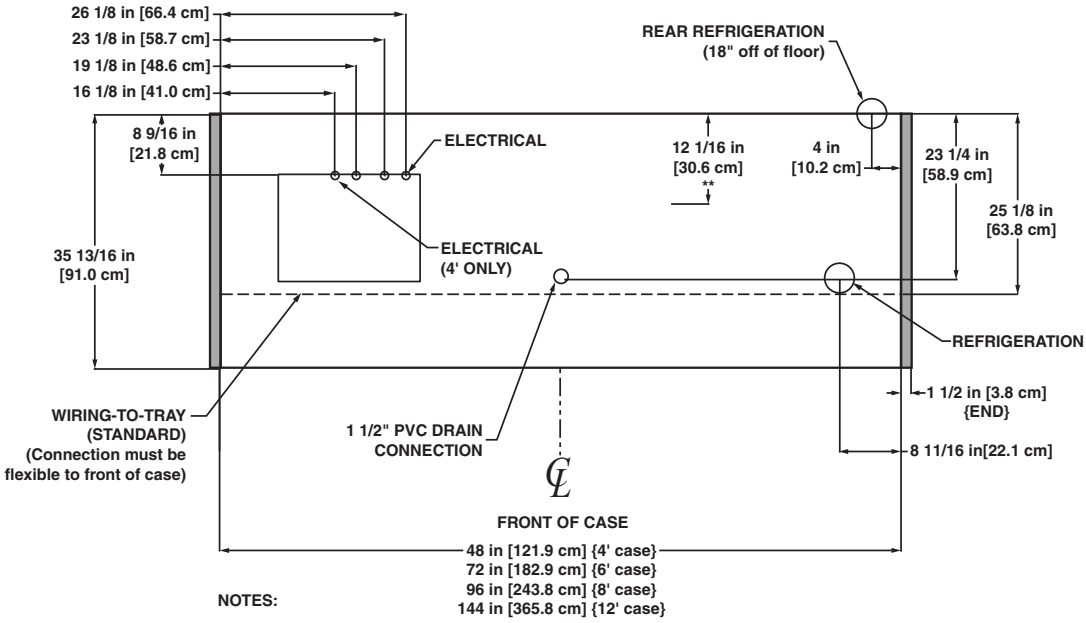

NOTES:

* STUB-UP AREA
** RECOMMENDED STUB-UP CENTERLINE FOR ELECTRICAL AND HUB DRAINS

- FRONT AND REAR SILL HEIGHTS VARY WITH BASEFRAME HEIGHT
- ENDS ADD APPROXIMATELY 1 INCH TO CASE HEIGHT
- A 2" MINIMUM AIR GAP IS REQUIRED BETWEEN THE REAR OF THE CASE AND A WALL
- SUCTION LINE (4' & 6') - 1/2", SUCTION LINE (8' & 12') - 5/8", LIQUID LINE (ALL LENGTHS) - 3/8"
- AVAILABLE SHELF SIZES: 10", 12", 14" & 16"
- PRODUCT ON TOP SHELF SHOULD BE 3" BELOW DISCHARGE
- RECOMMENDED SHELF CONFIGURATION IN ROWS: 1-12"

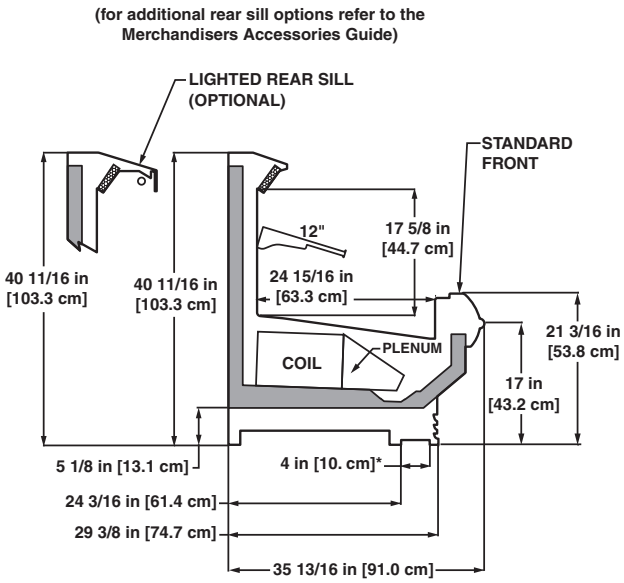

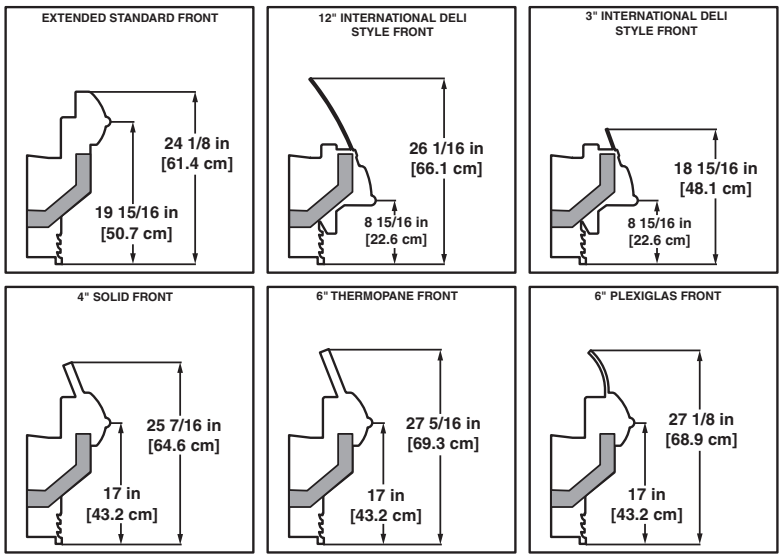

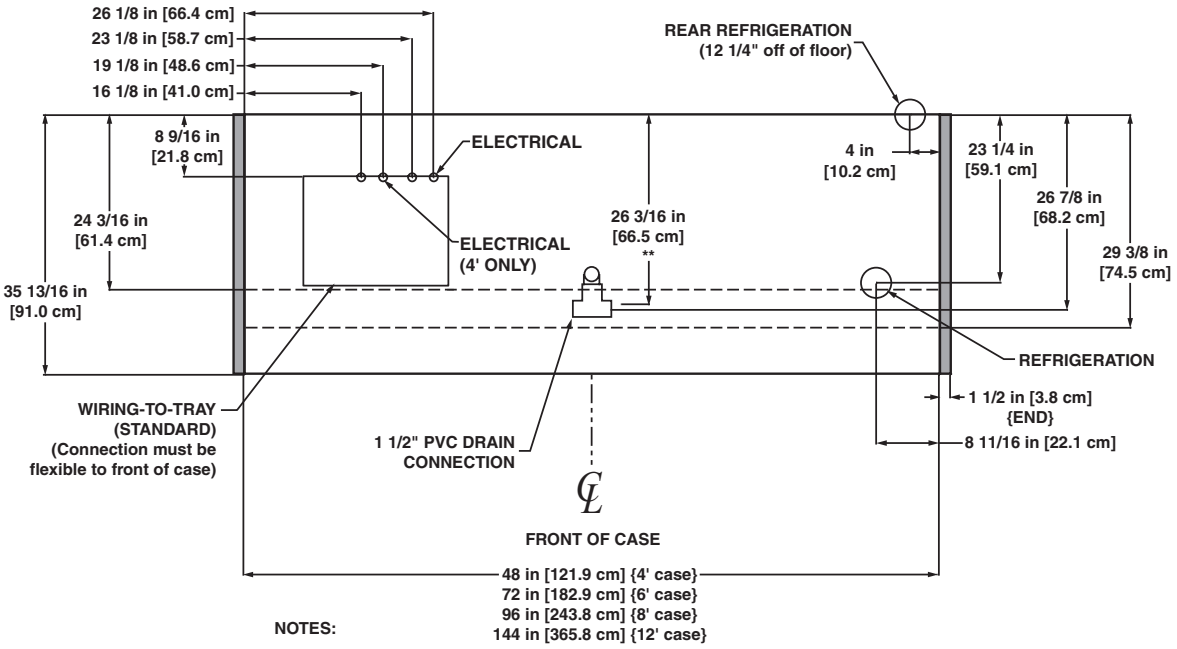

NOTES:

* STUB-UP AREA
** RECOMMENDED STUB-UP CENTERLINE FOR ELECTRICAL AND HUB DRAINS

- FRONT AND REAR SILL HEIGHTS VARY WITH BASEFRAME HEIGHT
- ENDS ADD APPROXIMATELY 1 INCH TO CASE HEIGHT
- A 2" MINIMUM AIR GAP IS REQUIRED BETWEEN THE REAR OF THE CASE AND A WALL
- SUCTION LINE (4' & 6') - 1/2", SUCTION LINE (8' & 12') - 5/8", LIQUID LINE (ALL LENGTHS) - 3/8"
- AVAILABLE SHELF SIZES: 10", 12", 14" & 16"
- PRODUCT ON TOP SHELF SHOULD BE 3" BELOW DISCHARGE
- RECOMMENDED SHELF CONFIGURATION IN ROWS: 1-12"

Multi-Deck Produce/Dairy/Deli/Meat/Seafood Merchandiser

O2UM - 4′, 6′, 8′ & 12′

Electrical Data

Model		Fans per Case	Standard Fans 120 Volts Amps	Standard Fans 120 Volts Watts	High Efficiency Fans 120 Volts Amps	High Efficiency Fans 120 Volts Watts	Anti-Condensate Heaters 120 Volts Amps	Anti-Condensate Heaters 120 Volts Watts	Defrost Heaters 208 Volts Amps	Defrost Heaters 208 Volts Watts	Defrost Heaters 240 Volts Amps	Defrost Heaters 240 Volts Watts
O2UM	4′	2	1.00	60	0.15	9.2	0.14[1]	17	1.92	400	2.22	532
	6′	2	1.00	60	0.15	9.2	0.20[1]	24	2.88	600	3.33	798
	8′	3	1.50	90	0.23	13.8	0.25[1]	30	3.85	800	4.44	1065
	12′	4	2.00	120	0.31	18.4	0.38[1]	46	5.77	1200	6.67	1600

[1] Anti-condensate heater data for unlighted rear sill. For lighted rear sill, double the values.

Lighting Data

Model		Bulbs per Row	Bulb Length	Typical per Light Row 120 Volts Amps	Typical per Light Row 120 Volts Watts	Maximum Lighting 120 Volts Amps	Maximum Lighting 120 Volts Watts
O2UM	4′	1	4′	0.23	28	0.70	84
	6′	2	3′	0.37	44	1.10	132
	8′	2	4′	0.47	56	1.40	168
	12′	3	4′	0.70	84	2.10	252

Guidelines & Control Settings

Model[2]	BTUH/ft[3]	Coil Type	Evaporator (°F)	Superheat Set Point @ Bulb (°F)	Discharge Air (°F)	Return Air (°F)	Discharge Air Velocity[5] (FPM)
O2UM	1000[4]	Enh.	22	6-8	27	40	340

[2] Model O2UM only available for meat application with a thermopane glass front or a curved plexiglas front.

[3] BTUHs/ft listed are for parallel operation. Conventional ratings may be approximated by multiplying listed rating by 1.04.

[4] High efficiency fans reduce refrigeration load by 96 BTUHs/fan.

[5] Average discharge air velocity at peak of defrost.

Defrost Controls

Model	Defrosts Per Day	Run-Off Time (min)	Electric Defrost Fail-safe (min)	Electric Defrost Termination Temp. (°F)	Timed Off Defrost Fail-safe (min)	Timed Off Defrost Termination Temp. (°F)	Hot Gas Defrost Fail-safe (min)	Hot Gas Defrost Termination Temp. (°F)	Reverse Air Defrost Fail-safe (min)	Reverse Air Defrost Termination Temp. (°F)
O2UM	3	6 - 8	40	47	45	45	26	45	45	45

Medium Temperature Defrost Schedule

No. Per Day	Hours
1	12 midnight
2	12 am - 12 pm
3	6 am - 2 pm - 10 pm
4	12 - 6 am - 12 - 6 pm

All measurements are taken per ARI 1200 - 2002 specifications.

NSF COMPONENT
c UL us
HILL PHOENIX EXCELLENCE
A DOVER COMPANY

(for additional rear sill options refer to the Merchandisers Accessories Guide)

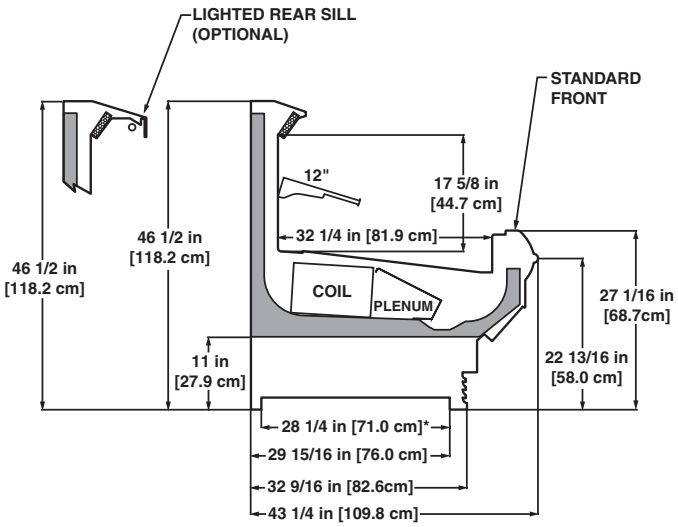

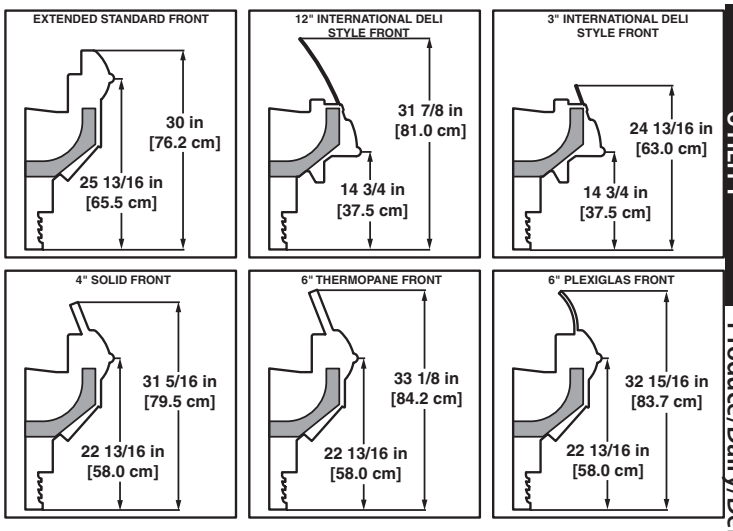

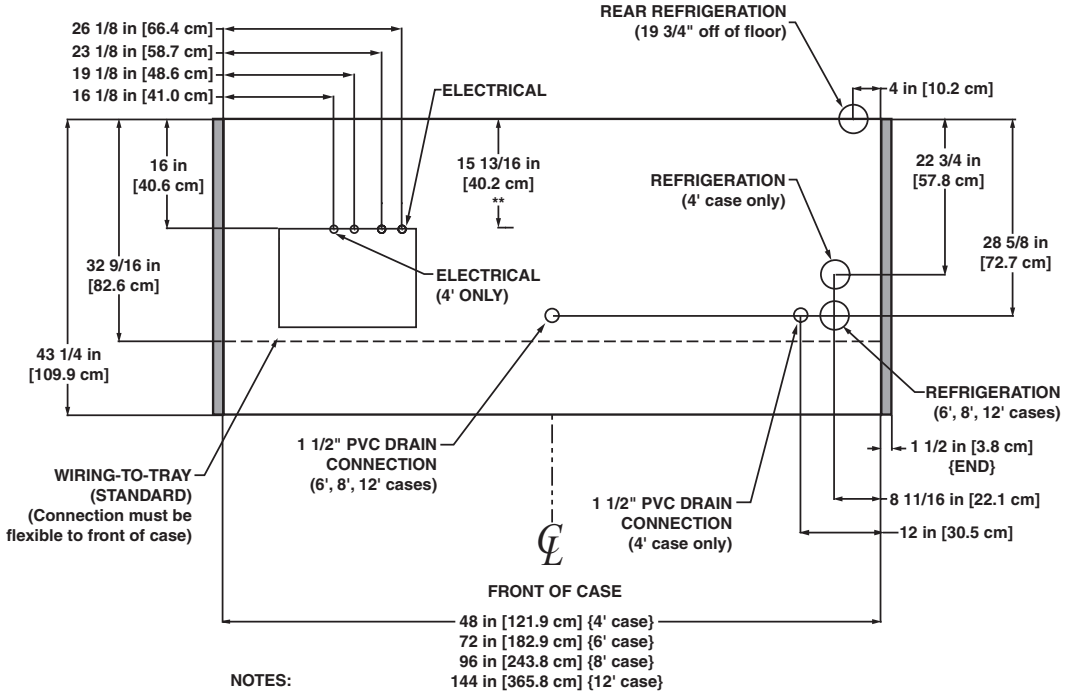

NOTES:

* STUB-UP AREA
** RECOMMENDED STUB-UP CENTERLINE FOR ELECTRICAL AND HUB DRAINS

- FRONT AND REAR SILL HEIGHTS VARY WITH BASEFRAME HEIGHT
- ENDS ADD APPROXIMATELY 1 INCH TO CASE HEIGHT
- A 2" MINIMUM AIR GAP IS REQUIRED BETWEEN THE REAR OF THE CASE AND A WALL
- SUCTION LINE (4' & 6') - 1/2", SUCTION LINE (8' & 12') - 5/8", LIQUID LINE (ALL LENGTHS) - 3/8"
- AVAILABLE SHELF SIZES: 10", 12", 14", 16" & 18"
- PRODUCT ON TOP SHELF SHOULD BE 3" BELOW DISCHARGE
- RECOMMENDED SHELF CONFIGURATION IN ROWS: 1-12"

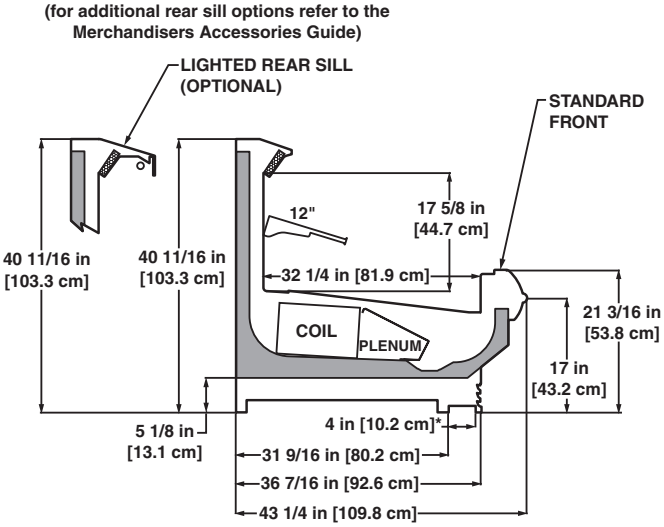

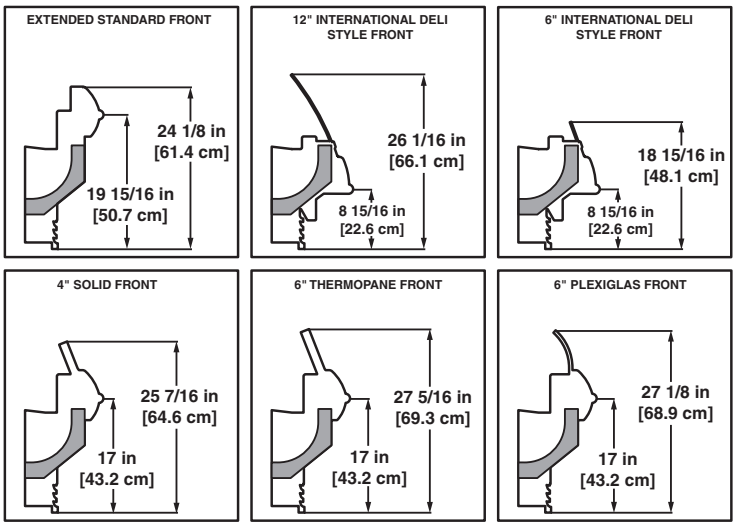

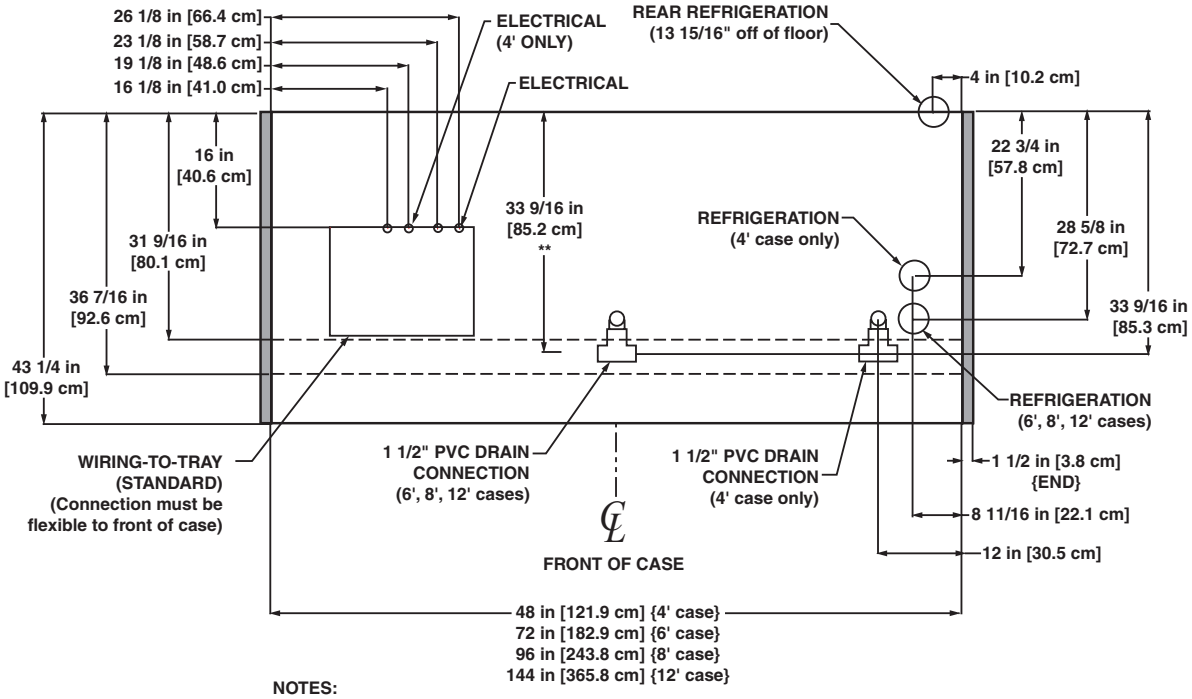

NOTES:

* STUB-UP AREA
** RECOMMENDED STUB-UP CENTERLINE FOR ELECTRICAL AND HUB DRAINS

- FRONT AND REAR SILL HEIGHTS VARY WITH BASEFRAME HEIGHT
- ENDS ADD APPROXIMATELY 1 INCH TO CASE HEIGHT
- A 2" MINIMUM AIR GAP IS REQUIRED BETWEEN THE REAR OF THE CASE AND A WALL
- SUCTION LINE (4' & 6') - 1/2", SUCTION LINE (8' & 12') - 5/8", LIQUID LINE (ALL LENGTHS) - 3/8"
- AVAILABLE SHELF SIZES: 10", 12", 14", 16" & 18"
- PRODUCT ON TOP SHELF SHOULD BE 3" BELOW DISCHARGE
- RECOMMENDED SHELF CONFIGURATION IN ROWS: 1-12"

Wide Multi-Deck Produce/Dairy/Deli Merchandiser

OW2UM - 8′ & 12′

Electrical Data

Model		Fans per Case	Standard Fans 120 Volts Amps	Standard Fans 120 Volts Watts	High Efficiency Fans 120 Volts Amps	High Efficiency Fans 120 Volts Watts	Anti-Condensate Heaters 120 Volts Amps	Anti-Condensate Heaters 120 Volts Watts	Defrost Heaters 208 Volts Amps	Defrost Heaters 208 Volts Watts	Defrost Heaters 240 Volts Amps	Defrost Heaters 240 Volts Watts
OW2UM	8′	3	1.50	90	0.23	13.8	0.25[1]	30	3.85	800	4.44	1065
	12′	4	2.00	120	0.31	18.4	0.38[1]	46	5.77	1200	6.67	1600

[1] Anti-condensate heater data for unlighted rear sill. For lighted rear sill, double the values.

Lighting Data

Model		Bulbs per Row	Bulb Length	Typical per Light Row 120 Volts Amps	Typical per Light Row 120 Volts Watts	Maximum Lighting 120 Volts Amps	Maximum Lighting 120 Volts Watts
OW2UM	8′	2	4′	0.47	56	1.40	168
	12′	3	4′	0.70	84	2.10	252

Guidelines & Control Settings

Model	BTUH/ft^2	Coil Type	Evaporator (°F)	Superheat Set Point @ Bulb (°F)	Discharge Air (°F)	Return Air (°F)	Discharge Air Velocity[4] (FPM)
OW2UM	1236[3]	Enh.	22	6-8	27	40	340

[2] BTUHs/ft listed are for parallel operation. Conventional ratings may be approximated by multiplying listed rating by 1.04.

[3] High efficiency fans reduce refrigeration load by 96 BTUHs/fan.

[4] Average discharge air velocity at peak of defrost.

Defrost Controls

Model	Defrosts Per Day	Run-Off Time (min)	Electric Defrost Fail-safe (min)	Electric Defrost Termination Temp. (°F)	Timed Off Defrost Fail-safe (min)	Timed Off Defrost Termination Temp. (°F)	Hot Gas Defrost Fail-safe (min)	Hot Gas Defrost Termination Temp. (°F)	Reverse Air Defrost Fail-safe (min)	Reverse Air Defrost Termination Temp. (°F)
OW2UM	3	6 - 8	40	47	45	45	26	45	45	45

Medium Temperature Defrost Schedule

No. Per Day	Hours
1	12 midnight
2	12 am - 12 pm
3	6 am - 2 pm - 10 pm
4	12 - 6 am - 12 - 6 pm

All measurements are taken per ARI 1200 - 2002 specifications.

6/07

(for additional rear sill options refer to the Merchandisers Accessories Guide)

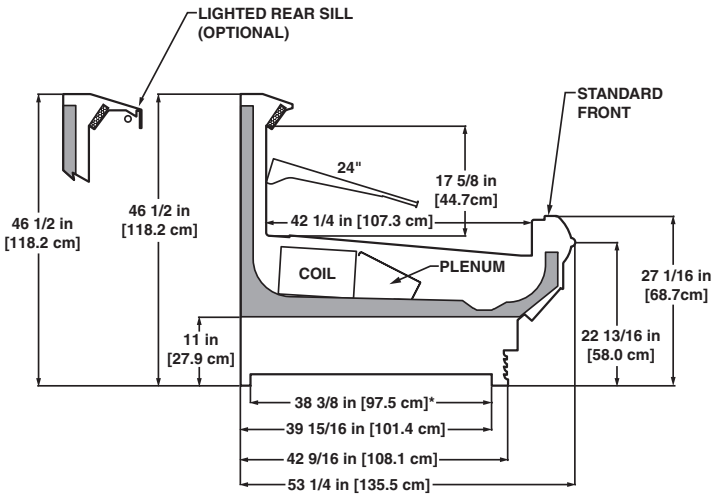

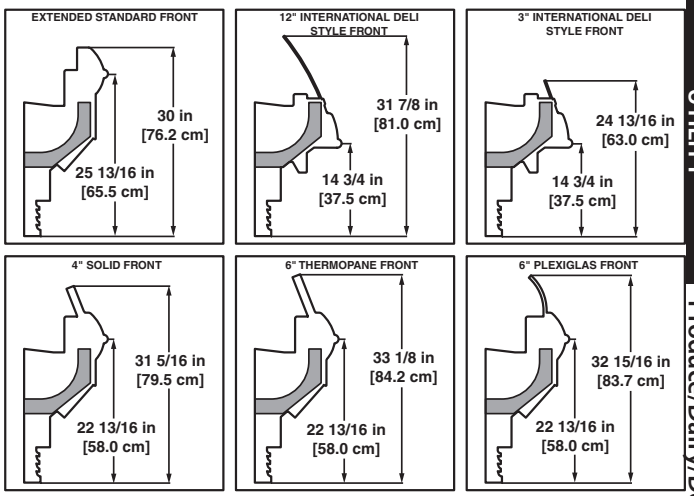

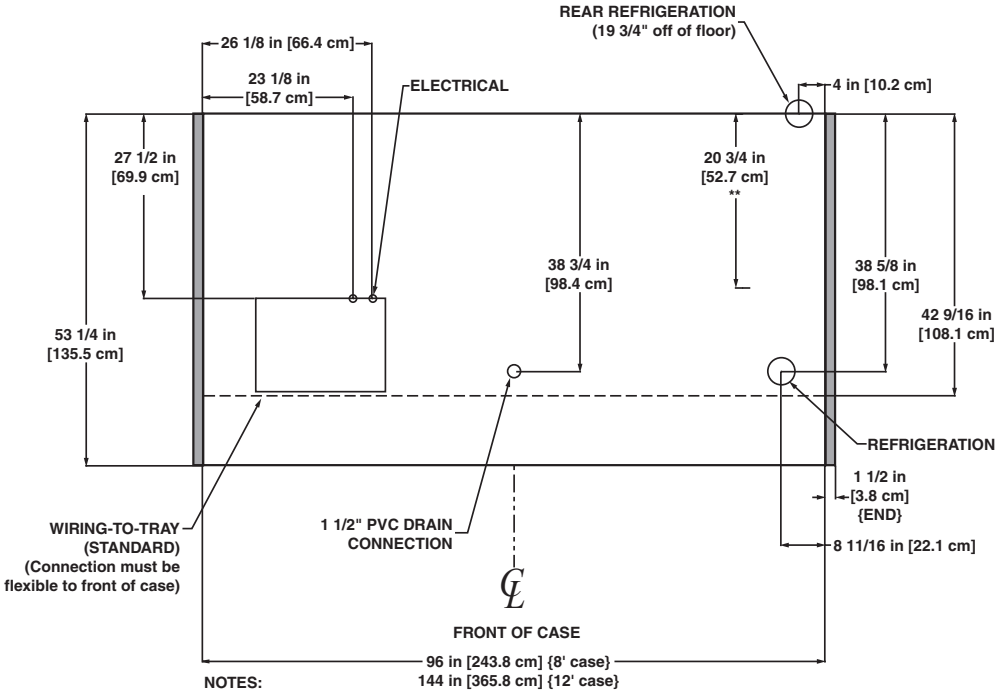

NOTES:

* STUB-UP AREA
** RECOMMENDED STUB-UP CENTERLINE FOR ELECTRICAL AND HUB DRAINS

- FRONT AND REAR SILL HEIGHTS VARY WITH BASEFRAME HEIGHT
- ENDS ADD APPROXIMATELY 1 INCH TO CASE HEIGHT
- A 2" MINIMUM AIR GAP IS REQUIRED BETWEEN THE REAR OF THE CASE AND A WALL
- SUCTION LINE - 5/8", LIQUID LINE - 3/8"
- AVAILABLE SHELF SIZES: 10", 12", 14", 16", 18", 20", 22" & 24"
- PRODUCT ON TOP SHELF SHOULD BE 3" BELOW DISCHARGE
- RECOMMENDED SHELF CONFIGURATION IN ROWS: 1-24"

NSF COMPONENT c UL us

A DOVER COMPANY

Narrow Multi-Deck Produce/Dairy/Deli/Meat/Seafood Merchandiser

ON2.5UM - 4′, 6′, 8′ & 12′

Electrical Data

Model		Fans per Case	Standard Fans 120 Volts Amps	Standard Fans 120 Volts Watts	High Efficiency Fans 120 Volts Amps	High Efficiency Fans 120 Volts Watts	Anti-Condensate Heaters 120 Volts Amps	Anti-Condensate Heaters 120 Volts Watts	Defrost Heaters 208 Volts Amps	Defrost Heaters 208 Volts Watts	Defrost Heaters 240 Volts Amps	Defrost Heaters 240 Volts Watts
ON2.5UM	4′	2	1.00	60	0.15	9.2	0.14[1]	17	1.92	400	2.22	532
	6′	2	1.00	60	0.15	9.2	0.20[1]	24	2.88	600	3.33	798
	8′	3	1.50	90	0.23	13.8	0.25[1]	30	3.85	800	4.44	1065
	12′	4	2.00	120	0.31	18.4	0.38[1]	46	5.77	1200	6.67	1600

[1] Anti-condensate heater data for unlighted rear sill. For lighted rear sill, double the values.

Lighting Data

Model		Bulbs per Row	Bulb Length	Typical per Light Row 120 Volts Amps	Typical per Light Row 120 Volts Watts	Maximum Lighting 120 Volts Amps	Maximum Lighting 120 Volts Watts
ON2.5UM	4′	1	4′	0.23	28	0.93	112
	6′	2	3′	0.37	44	1.47	176
	8′	2	4′	0.47	56	1.87	224
	12′	3	4′	0.70	84	2.80	336

Guidelines & Control Settings

Model[2]	BTUH/ft[3]	Coil Type	Evaporator (°F)	Superheat Set Point @ Bulb (°F)	Discharge Air (°F)	Return Air (°F)	Discharge Air Velocity[5] (FPM)
ON2.5UM	811[4]	Enh.	22	6-8	28	35	284

[2] Model ON2.5UM only available for meat application with a thermopane glass front or a curved plexiglas front.

[3] BTUHs/ft listed are for parallel operation. Conventional ratings may be approximated by multiplying listed rating by 1.04.

[4] High efficiency fans reduce refrigeration load by 96 BTUHs/fan.

[5] Average discharge air velocity at peak of defrost.

Defrost Controls

Model	Defrosts Per Day	Run-Off Time (min)	Electric Defrost Fail-safe (min)	Electric Defrost Termination Temp. (°F)	Timed Off Defrost Fail-safe (min)	Timed Off Defrost Termination Temp. (°F)	Hot Gas Defrost Fail-safe (min)	Hot Gas Defrost Termination Temp. (°F)	Reverse Air Defrost Fail-safe (min)	Reverse Air Defrost Termination Temp. (°F)
ON2.5UM	3	6 - 8	40	47	45	45	26	45	45	45

Medium Temperature Defrost Schedule

No. Per Day	Hours
1	12 midnight
2	12 am - 12 pm
3	6 am - 2 pm - 10 pm
4	12 - 6 am - 12 - 6 pm

All measurements are taken per ARI 1200 - 2002 specifications.

NSF COMPONENT
c UL us
Hill PHOENIX EXCELLENCE
A DOVER COMPANY

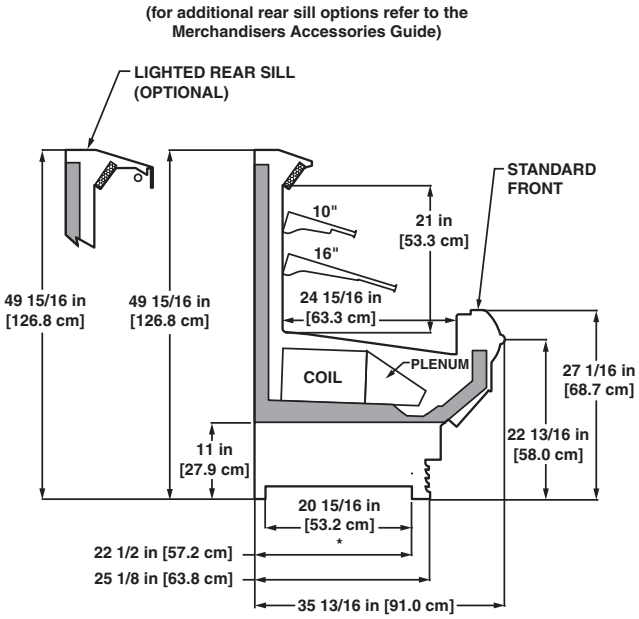

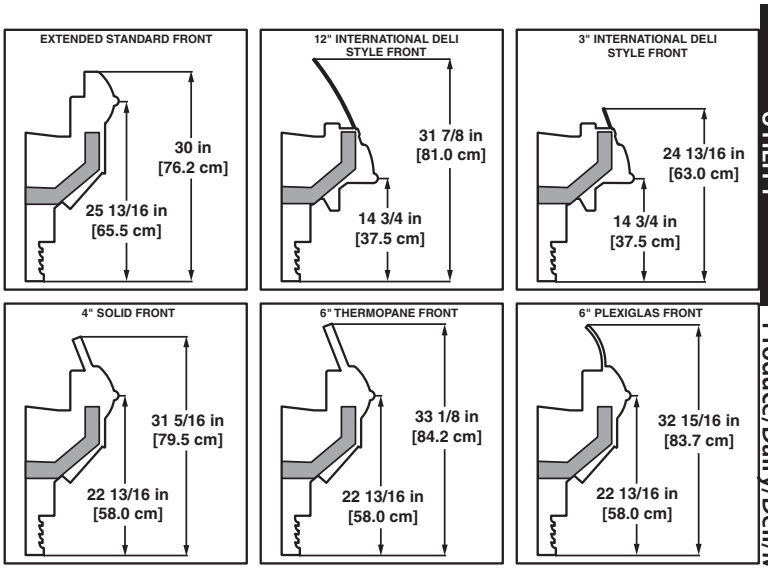

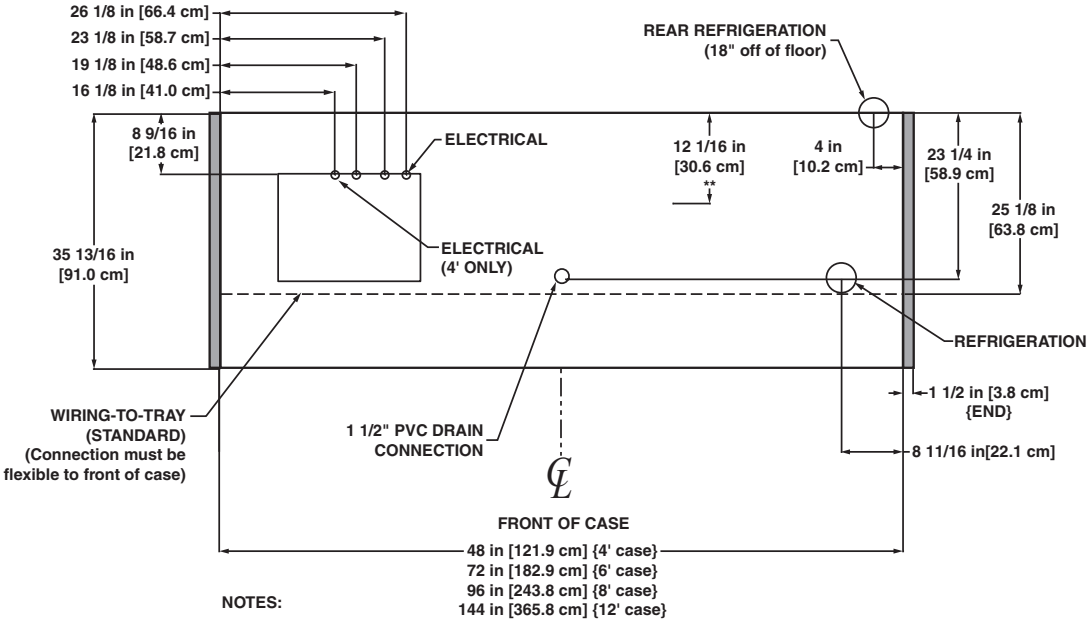

NOTES:

* STUB-UP AREA
** RECOMMENDED STUB-UP CENTERLINE FOR ELECTRICAL AND HUB DRAINS

- FRONT AND REAR SILL HEIGHTS VARY WITH BASEFRAME HEIGHT
- ENDS ADD APPROXIMATELY 1 INCH TO CASE HEIGHT
- A 2" MINIMUM AIR GAP IS REQUIRED BETWEEN THE REAR OF THE CASE AND A WALL
- SUCTION LINE (4' & 6') - 1/2", SUCTION LINE (8' & 12') - 5/8", LIQUID LINE (ALL LENGTHS) - 3/8"
- AVAILABLE SHELF SIZES: 10", 12", 14" & 16"
- PRODUCT ON TOP SHELF SHOULD BE 3" BELOW DISCHARGE
- RECOMMENDED SHELF CONFIGURATION IN ROWS: 1-10" & 1-16"

NSF COMPONENT c UL us

A DOVER COMPANY

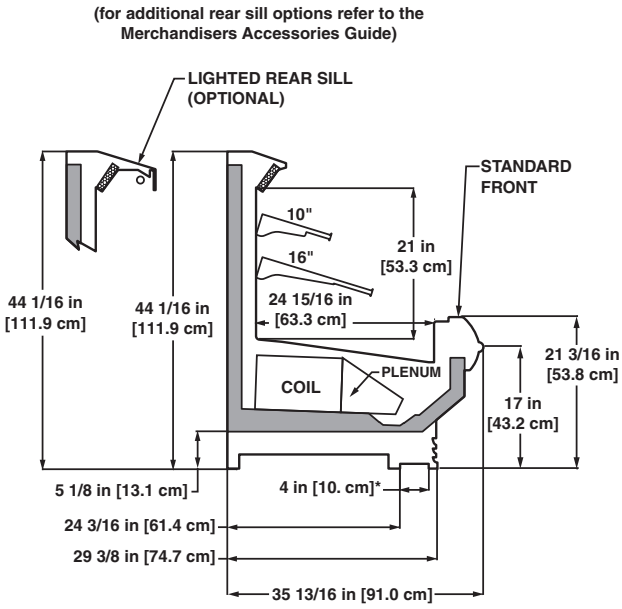

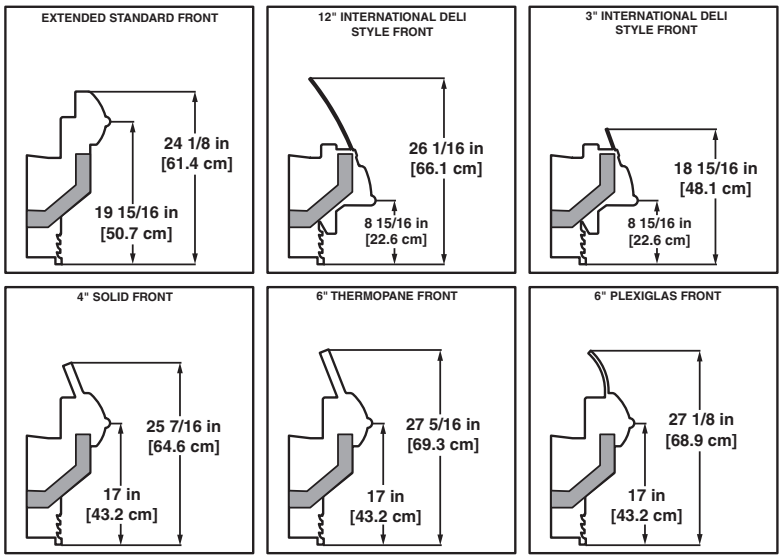

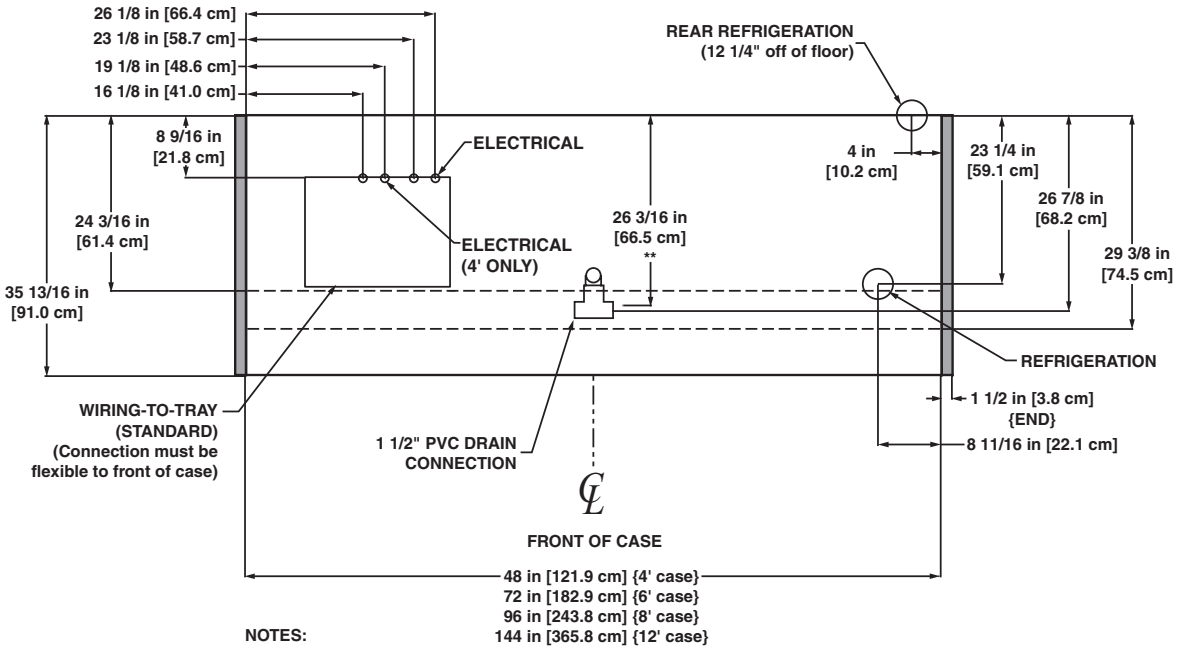

NOTES:

* STUB-UP AREA
** RECOMMENDED STUB-UP CENTERLINE FOR ELECTRICAL AND HUB DRAINS

- FRONT AND REAR SILL HEIGHTS VARY WITH BASEFRAME HEIGHT
- ENDS ADD APPROXIMATELY 1 INCH TO CASE HEIGHT
- A 2" MINIMUM AIR GAP IS REQUIRED BETWEEN THE REAR OF THE CASE AND A WALL
- SUCTION LINE (4' & 6') - 1/2", SUCTION LINE (8' & 12') - 5/8", LIQUID LINE (ALL LENGTHS) - 3/8"
- AVAILABLE SHELF SIZES: 10", 12", 14" & 16"
- PRODUCT ON TOP SHELF SHOULD BE 3" BELOW DISCHARGE
- RECOMMENDED SHELF CONFIGURATION IN ROWS: 1-10" & 1-16"

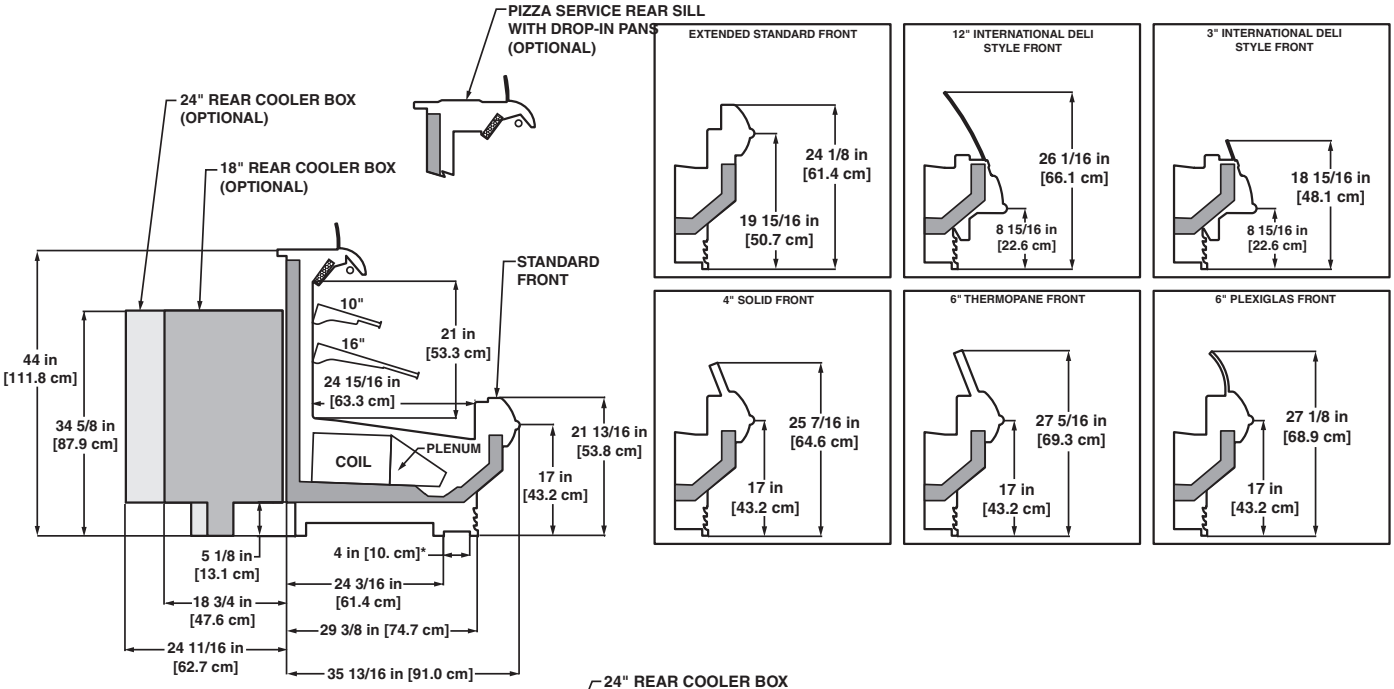

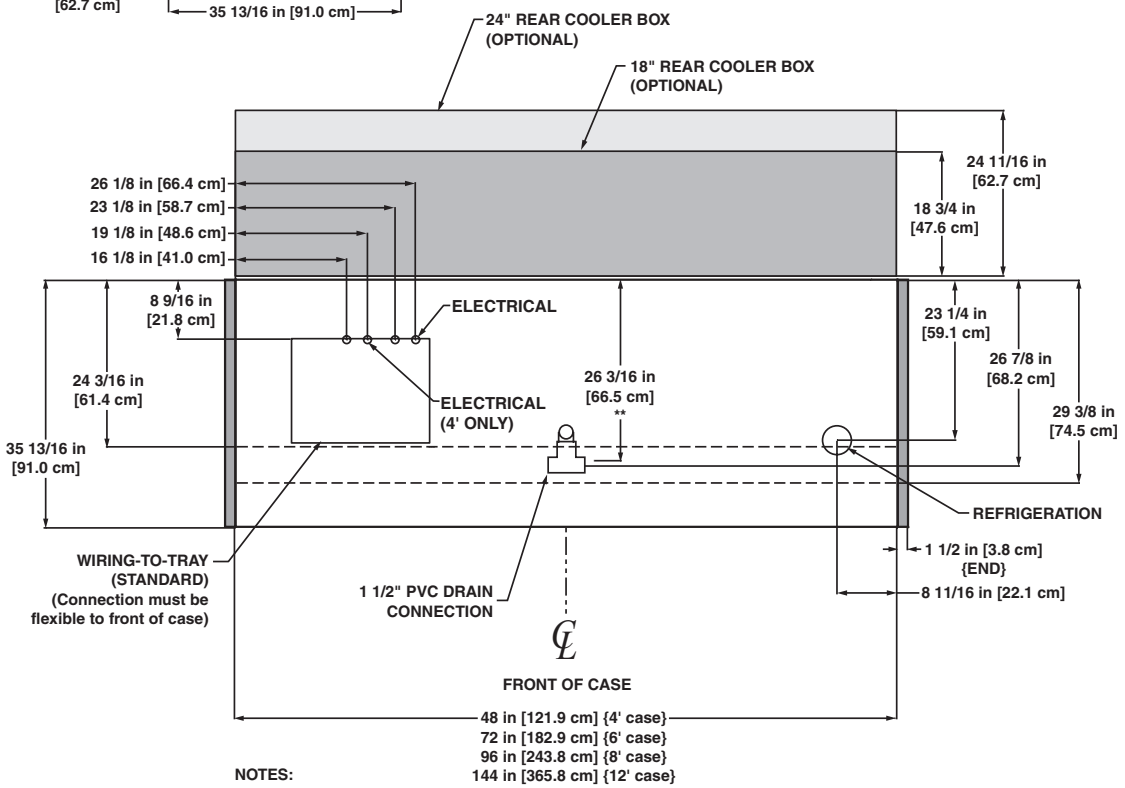

NOTES:

* STUB-UP AREA
** RECOMMENDED STUB-UP CENTERLINE FOR ELECTRICAL AND HUB DRAINS

- FRONT AND REAR SILL HEIGHTS VARY WITH BASEFRAME HEIGHT
- ENDS ADD APPROXIMATELY 1 INCH TO CASE HEIGHT
- A 2" MINIMUM AIR GAP IS REQUIRED BETWEEN THE REAR OF THE CASE AND A WALL
- SUCTION LINE (4' & 6') - 1/2", SUCTION LINE (8' & 12') - 5/8", LIQUID LINE (ALL LENGTHS) - 3/8"
- AVAILABLE SHELF SIZES: 10", 12", 14" & 16"
- PRODUCT ON TOP SHELF SHOULD BE 3" BELOW DISCHARGE
- RECOMMENDED SHELF CONFIGURATION IN ROWS: 1-10" & 1-16"

Multi-Deck Produce/Dairy/Deli/Meat/Seafood Merchandiser

O2.5UM - 4′, 6′, 8′ & 12′

Electrical Data

Model		Fans per Case	Standard Fans 120 Volts Amps	Standard Fans 120 Volts Watts	High Efficiency Fans 120 Volts Amps	High Efficiency Fans 120 Volts Watts	Anti-Condensate Heaters 120 Volts Amps	Anti-Condensate Heaters 120 Volts Watts	Defrost Heaters 208 Volts Amps	Defrost Heaters 208 Volts Watts	Defrost Heaters 240 Volts Amps	Defrost Heaters 240 Volts Watts
O2.5UM	4′	2	1.00	60	0.15	9.2	0.14[1]	17	1.92	400	2.22	532
	6′	2	1.00	60	0.15	9.2	0.20[1]	24	2.88	600	3.33	798
	8′	3	1.50	90	0.23	13.8	0.25[1]	30	3.85	800	4.44	1065
	12′	4	2.00	120	0.31	18.4	0.38[1]	46	5.77	1200	6.67	1600

[1] Anti-condensate heater data for unlighted rear sill. For lighted rear sill, double the values.

Lighting Data

Model		Bulbs per Row	Bulb Length	Typical per Light Row 120 Volts Amps	Typical per Light Row 120 Volts Watts	Maximum Lighting 120 Volts Amps	Maximum Lighting 120 Volts Watts
O2.5UM	4′	1	4′	0.23	28	1.40	168
	6′	2	3′	0.37	44	2.20	264
	8′	2	4′	0.47	56	2.80	336
	12′	3	4′	0.70	84	4.20	504

Guidelines & Control Settings

Model[2]	BTUH/ft[3]	Coil Type	Evaporator (°F)	Superheat Set Point @ Bulb (°F)	Discharge Air (°F)	Return Air (°F)	Discharge Air Velocity[5] (FPM)
O2.5UM[6]	1020[4]	Enh.	22	6-8	27	45	225
O2.5UM w/Plexi Dome	1380[4]	Enh.	22	6-8	32	46	305

[2] Model O2.5UM only available for meat application with a thermopane glass front or a curved plexiglas front.

[3] BTUHs/ft listed are for parallel operation. Conventional ratings may be approximated by multiplying listed rating by 1.04.

[4] High efficiency fans reduce refrigeration load by 96 BTUHs/fan.

[5] Average discharge air velocity at peak of defrost.

[6] For cases with rear refrigerated storage boxes add 110 BTUH/ft

Defrost Controls

Model	Defrosts Per Day	Run-Off Time (min)	Electric Defrost Fail-safe (min)	Electric Defrost Termination Temp. (°F)	Timed Off Defrost Fail-safe (min)	Timed Off Defrost Termination Temp. (°F)	Hot Gas Defrost Fail-safe (min)	Hot Gas Defrost Termination Temp. (°F)	Reverse Air Defrost Fail-safe (min)	Reverse Air Defrost Termination Temp. (°F)
O2.5UM	3	6 - 8	40	47	45	45	26	45	45	45

Medium Temperature Defrost Schedule

No. Per Day	Hours
1	12 midnight
2	12 am - 12 pm
3	6 am - 2 pm - 10 pm
4	12 - 6 am - 12 - 6 pm

All measurements are taken per ARI 1200 - 2002 specifications.

(for additional rear sill options refer to the Merchandisers Accessories Guide)

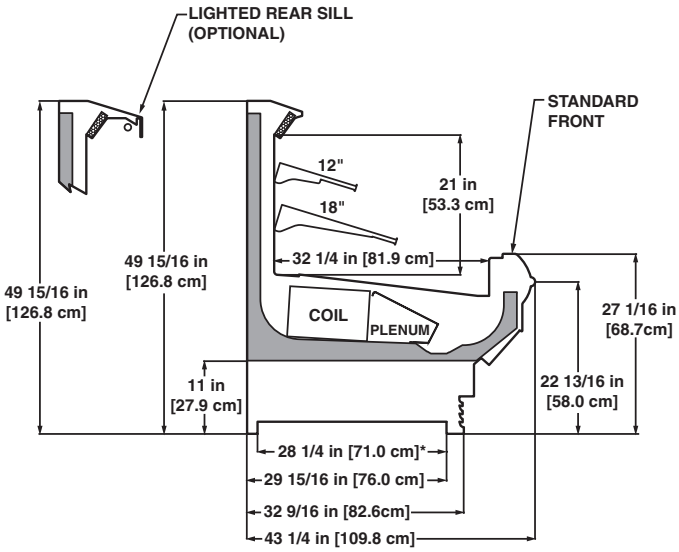

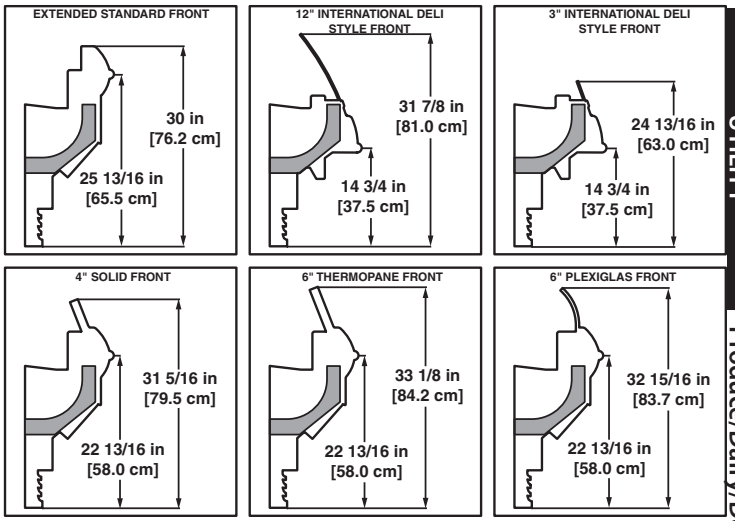

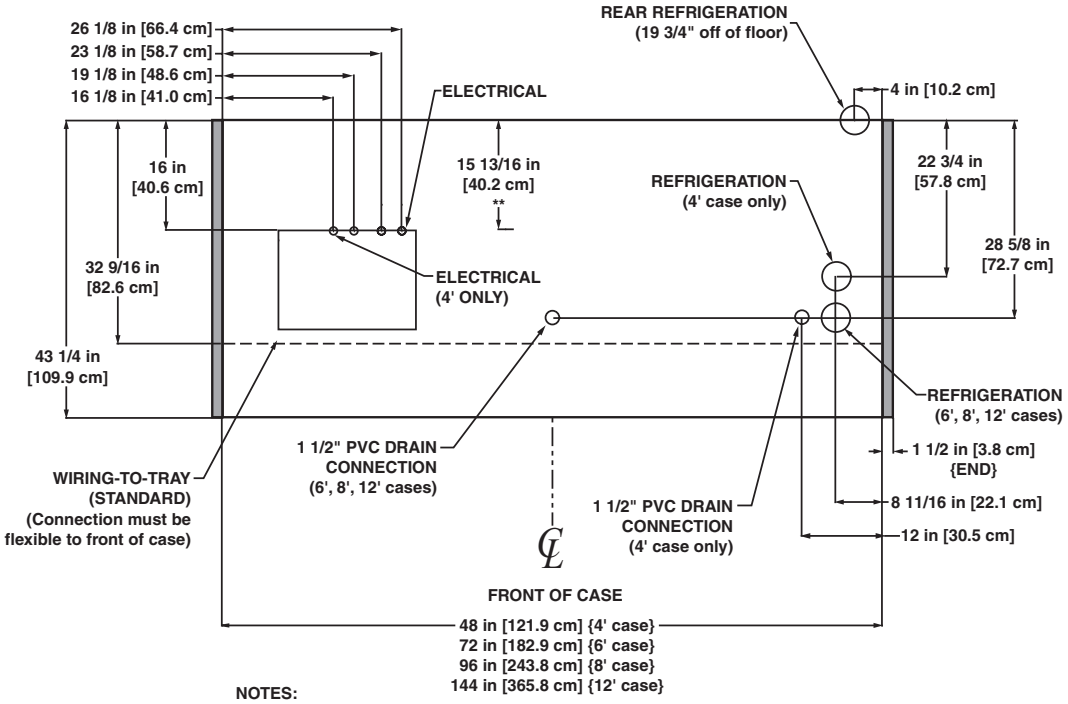

NOTES:

* STUB-UP AREA
** RECOMMENDED STUB-UP CENTERLINE FOR ELECTRICAL AND HUB DRAINS

- FRONT AND REAR SILL HEIGHTS VARY WITH BASEFRAME HEIGHT
- ENDS ADD APPROXIMATELY 1 INCH TO CASE HEIGHT
- A 2" MINIMUM AIR GAP IS REQUIRED BETWEEN THE REAR OF THE CASE AND A WALL
- SUCTION LINE (4' & 6') - 1/2", SUCTION LINE (8' & 12') - 5/8", LIQUID LINE (ALL LENGTHS) - 3/8"
- AVAILABLE SHELF SIZES: 10", 12", 14", 16" & 18"
- PRODUCT ON TOP SHELF SHOULD BE 3" BELOW DISCHARGE
- RECOMMENDED SHELF CONFIGURATION IN ROWS: 1-12" & 1-18"

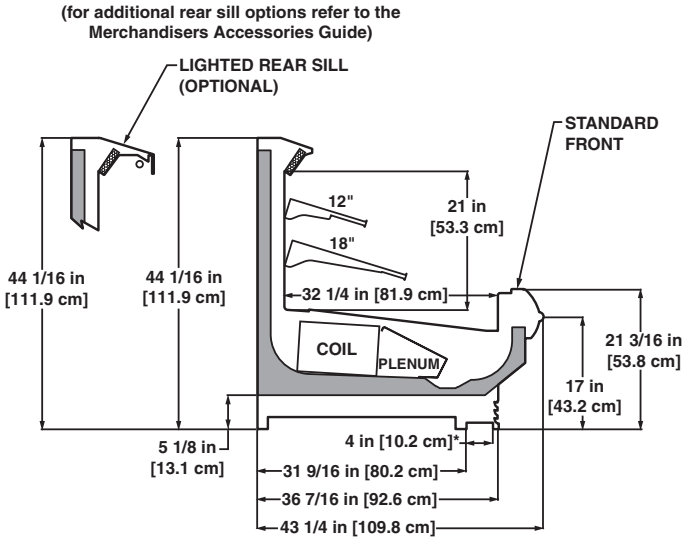

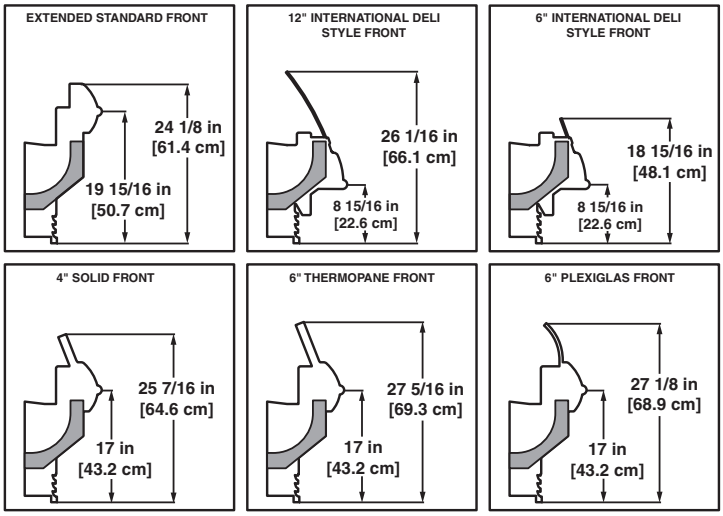

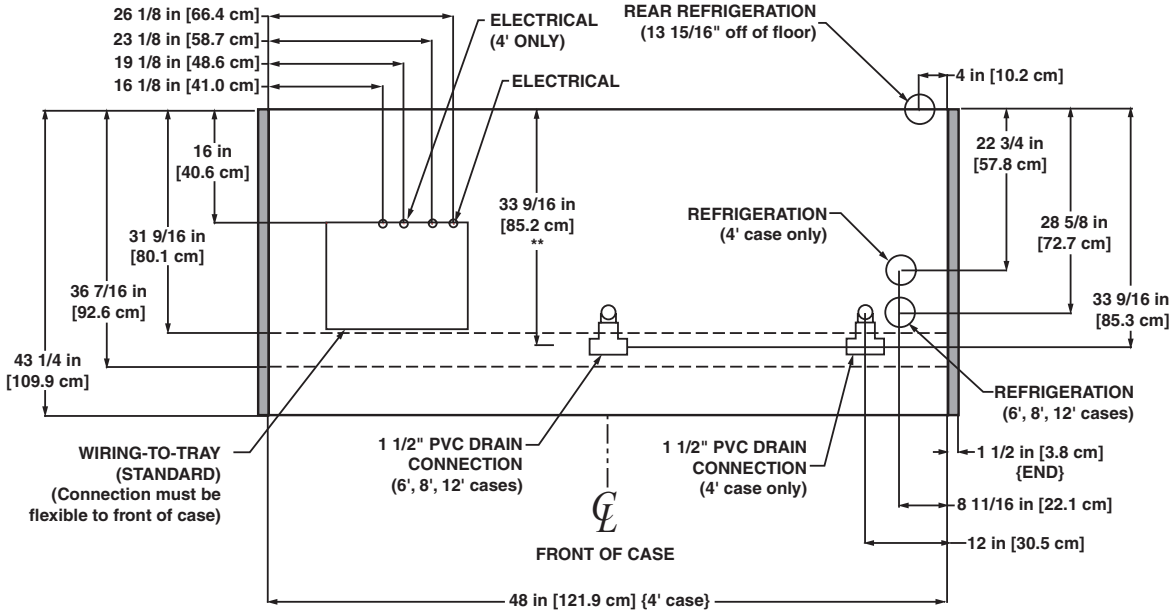

NOTES:

* STUB-UP AREA
** RECOMMENDED STUB-UP CENTERLINE FOR ELECTRICAL AND HUB DRAINS

- FRONT AND REAR SILL HEIGHTS VARY WITH BASEFRAME HEIGHT
- ENDS ADD APPROXIMATELY 1 INCH TO CASE HEIGHT
- A 2" MINIMUM AIR GAP IS REQUIRED BETWEEN THE REAR OF THE CASE AND A WALL
- SUCTION LINE (4' & 6') - 1/2", SUCTION LINE (8' & 12') - 5/8", LIQUID LINE (ALL LENGTHS) - 3/8"
- AVAILABLE SHELF SIZES: 10", 12", 14", 16" & 18"
- PRODUCT ON TOP SHELF SHOULD BE 3" BELOW DISCHARGE
- RECOMMENDED SHELF CONFIGURATION IN ROWS: 1-12" & 1-18"

NSF COMPONENT c UL us

A DOVER COMPANY

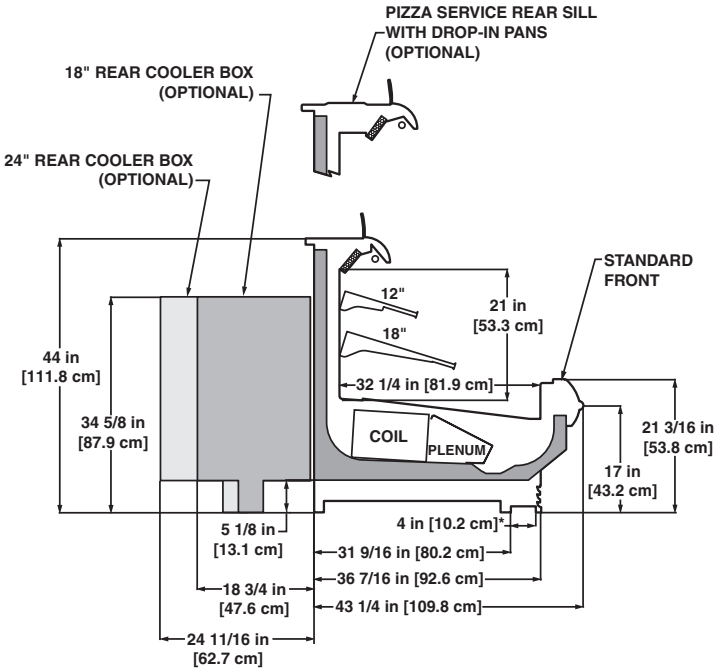

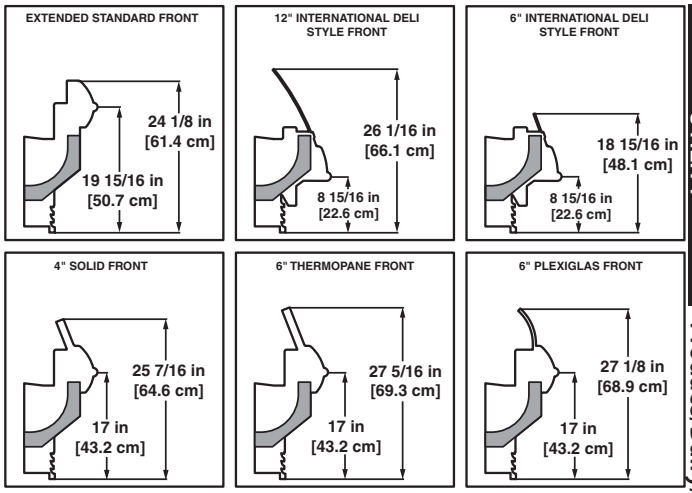

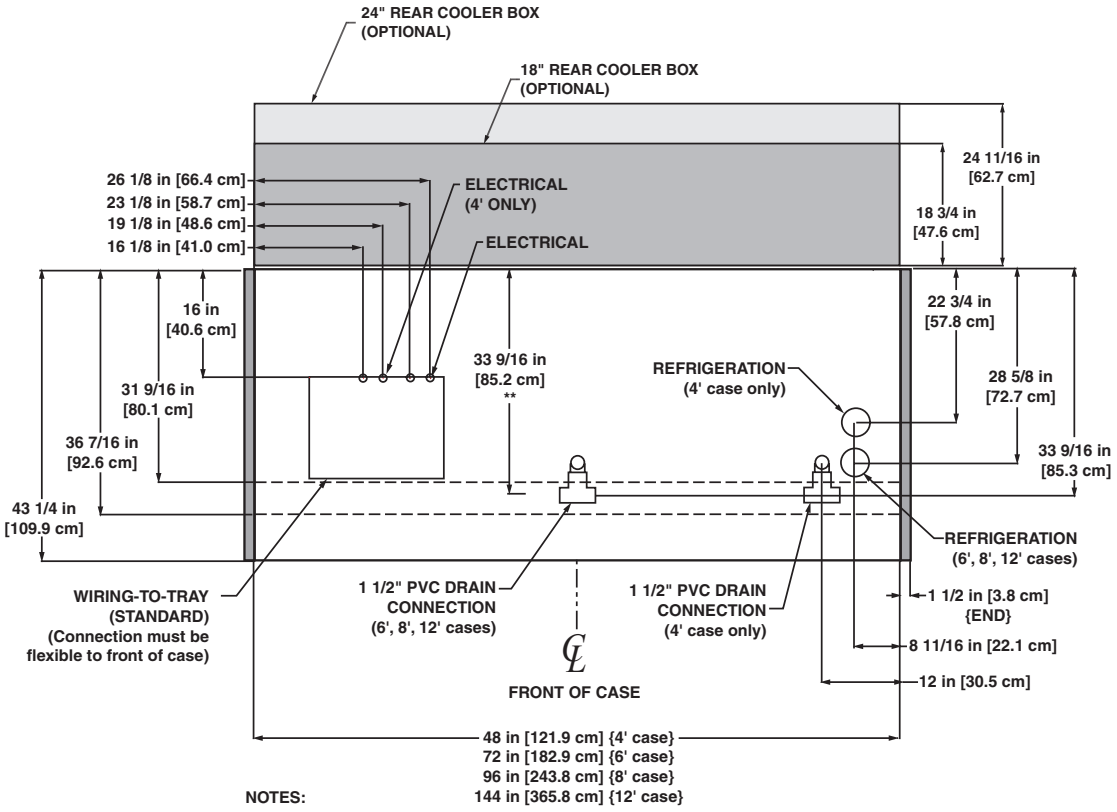

NOTES:

* STUB-UP AREA
** RECOMMENDED STUB-UP CENTERLINE FOR ELECTRICAL AND HUB DRAINS

- FRONT AND REAR SILL HEIGHTS VARY WITH BASEFRAME HEIGHT
- ENDS ADD APPROXIMATELY 1 INCH TO CASE HEIGHT
- A 2" MINIMUM AIR GAP IS REQUIRED BETWEEN THE REAR OF THE CASE AND A WALL
- SUCTION LINE (4' & 6') - 1/2", SUCTION LINE (8' & 12') - 5/8", LIQUID LINE (ALL LENGTHS) - 3/8"
- AVAILABLE SHELF SIZES: 10", 12", 14", 16" & 18"
- PRODUCT ON TOP SHELF SHOULD BE 3" BELOW DISCHARGE
- RECOMMENDED SHELF CONFIGURATION IN ROWS: 1-12" & 1-18"

Multi-Deck Self-Contained Produce/Dairy/Deli/Meat/Seafood Merchandiser

O2.5UMA - 8'

System Requirements

Model	Volts	Phase	Hz	Wire	Minimum Circuit Ampacity	Maximum Overcurrent Protection
O2.5UMA-8'	208	1	60	3 wire + ground	13.560	30

Electrical Data

Model	Fans per Case	Standard Fans		Condenser Fan		Anti-Condensate Heaters		Maximum Lighting		Defrost Heaters			
		120 Volts		208 Volts		120 Volts		120 Volts		208 Volts		240 Volts	
		Amps	Watts	Amps	Watts	Amps	Watts	Amps	Watts	Amps	Watts	Amps	Watts
O2.5UMA-8'	3	1.50	90	0.85	85	0.25[1]	30	1.41	169	3.85	800	4.44	1065

[1] Anti-condensate heater data for unlighted rear sill. For lighted rear sill, double the values.

Guidelines & Control Settings

Model[4]	24 hr Energy Usage (kWh)	Suction Pressure @ Case Outlet (psig)	Superheat Set Point @ Bulb (°F)	Discharge Air (°F)	Return Air (°F)	Discharge Air Velocity[5] (FPM)
O2.5UMA-8'		40	6-8	29	43	225

[4] Model O2.5UMA only available for meat application with a thermopane glass front or a curved plexiglas front.

[5] Average discharge air velocity at peak of defrost.

Condensing Unit Data

Model	Volts	Phase	Frequency (Hz)	HP	RLA[2] (amps)	LRA[3] (amps)	Refrig.	lbs of Refrig.
O2.5UMA-8'	208	1	60	1	10.4	48.2	R22	5.25

[2] RLA - Running Load Amps.

[3] LRA - Locked Rotor Amps.

Defrost Controls

Model	Defrosts Per Day	Run-Off Time (min)	Electric Defrost		Timed Off Defrost		Hot Gas Defrost		Reverse Air Defrost	
			Fail-safe (min)	Termination Temp. (°F)	Fail-safe (min)	Termination Temp. (°F)	Fail-safe (min)	Termination Temp. (°F)	Fail-safe (min)	Termination Temp. (°F)
O2.5UMA-8'	3	6 - 8	40	47	45	45	- - -[6]	- - -	- - -	- - -

[6] NOTE: - - - not an option on this case model.

Medium Temperature Defrost Schedule

No. Per Day	Hours
1	12 midnight
2	12 am - 12 pm
3	6 am - 2 pm - 10 pm
4	12 - 6 am - 12 - 6 pm

All measurements are taken per ARI 1200 - 2002 specifications.

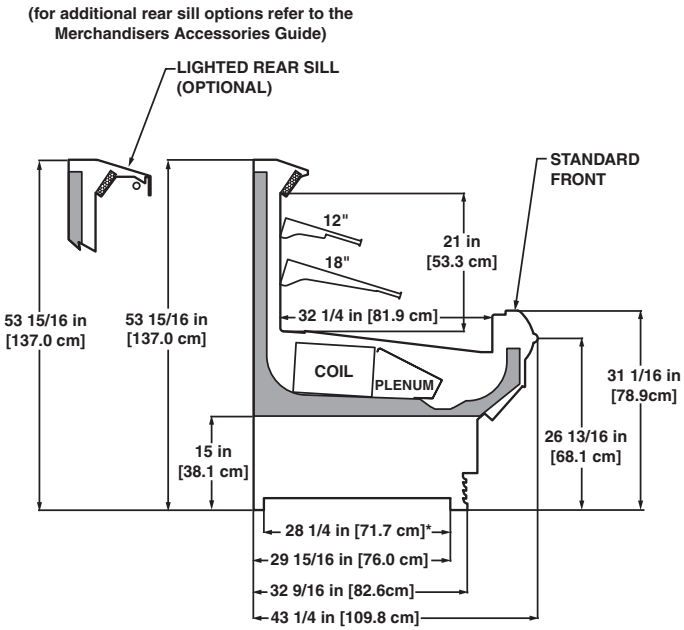

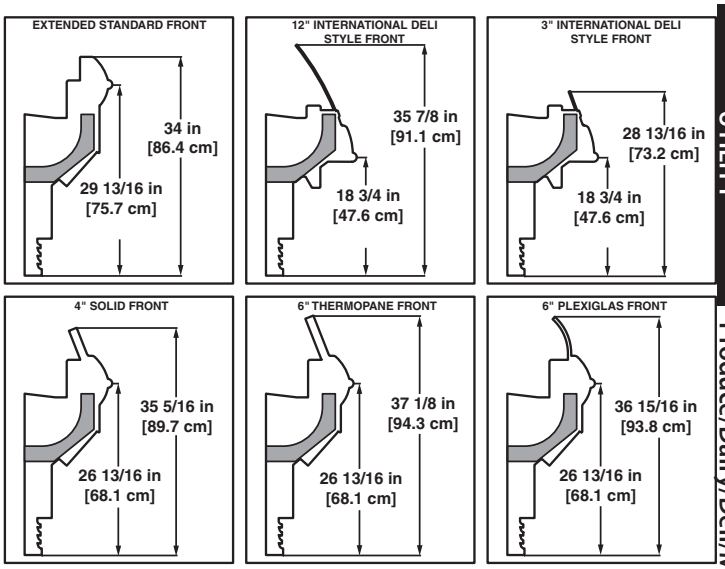

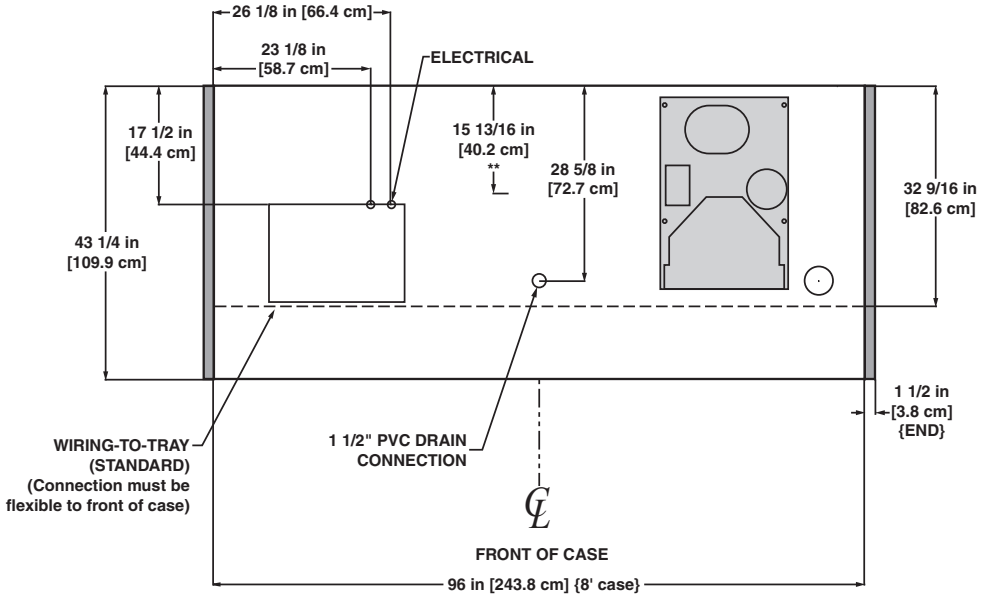

NOTES:

* STUB-UP AREA
** RECOMMENDED STUB-UP CENTERLINE FOR ELECTRICAL AND HUB DRAINS

- ENDS ADD APPROXIMATELY 1 INCH TO CASE HEIGHT
- A 2" MINIMUM AIR GAP IS REQUIRED BETWEEN THE REAR OF THE CASE AND A WALL
- AVAILABLE SHELF SIZES: 10", 12", 14", 16" & 18"
- PRODUCT ON TOP SHELF SHOULD BE 3" BELOW DISCHARGE
- RECOMMENDED SHELF CONFIGURATION IN ROWS: 1-12" & 1-18"

Multi-Deck Produce/Dairy/Deli/Meat/Seafood Merchandiser

O2.75UM - 4′, 6′, 8′ & 12′

Electrical Data

Model		Fans per Case	Standard Fans 120 Volts Amps	Standard Fans 120 Volts Watts	High Efficiency Fans 120 Volts Amps	High Efficiency Fans 120 Volts Watts	Anti-Condensate Heaters 120 Volts Amps	Anti-Condensate Heaters 120 Volts Watts	Defrost Heaters 208 Volts Amps	Defrost Heaters 208 Volts Watts	Defrost Heaters 240 Volts Amps	Defrost Heaters 240 Volts Watts
O2.75UM	4′	2	1.00	60	0.15	9.2	0.14[1]	17	1.92	400	2.22	532
	6′	2	1.00	60	0.15	9.2	0.20[1]	24	2.88	600	3.33	798
	8′	3	1.50	90	0.23	13.8	0.25[1]	30	3.85	800	4.44	1065
	12′	4	2.00	120	0.31	18.4	0.38[1]	46	5.77	1200	6.67	1600

[1] Anti-condensate heater data for unlighted rear sill. For lighted rear sill, double the values.

Lighting Data

Model		Bulbs per Row	Bulb Length	Typical per Light Row 120 Volts Amps	Typical per Light Row 120 Volts Watts	Maximum Lighting 120 Volts Amps	Maximum Lighting 120 Volts Watts
O2.75UM	4′	1	4′	0.23	28	0.93	112
	6′	2	3′	0.37	44	1.47	176
	8′	2	4′	0.47	56	1.87	224
	12′	3	4′	0.70	84	2.80	336

Guidelines & Control Settings

Model[2]	BTUH/ft[3]	Coil Type	Evaporator (°F)	Superheat Set Point @ Bulb (°F)	Discharge Air (°F)	Return Air (°F)	Discharge Air Velocity[5] (FPM)
O2.75UM	1025[4]	Enh.	22	6-8	27	45	225

[2] Model O2.75UM only available for meat application with a thermopane glass front or a curved plexiglas front.

[3] BTUHs/ft listed are for parallel operation. Conventional ratings may be approximated by multiplying listed rating by 1.04.

[4] High efficiency fans reduce refrigeration load by 96 BTUHs/fan.

[5] Average discharge air velocity at peak of defrost.

Defrost Controls

Model	Defrosts Per Day	Run-Off Time (min)	Electric Defrost Fail-safe (min)	Electric Defrost Termination Temp. (°F)	Timed Off Defrost Fail-safe (min)	Timed Off Defrost Termination Temp. (°F)	Hot Gas Defrost Fail-safe (min)	Hot Gas Defrost Termination Temp. (°F)	Reverse Air Defrost Fail-safe (min)	Reverse Air Defrost Termination Temp. (°F)
O2.75UM	3	6 - 8	40	47	45	45	26	45	45	45

Medium Temperature Defrost Schedule

No. Per Day	Hours
1	12 midnight
2	12 am - 12 pm
3	6 am - 2 pm - 10 pm
4	12 - 6 am - 12 - 6 pm

All measurements are taken per ARI 1200 - 2002 specifications.

Hill PHOENIX EXCELLENCE

A DOVER COMPANY

(for additional rear sill options refer to the Merchandisers Accessories Guide)

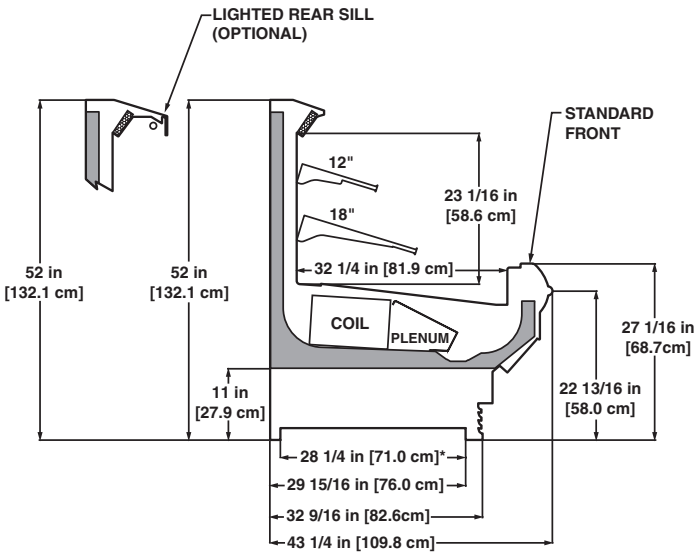

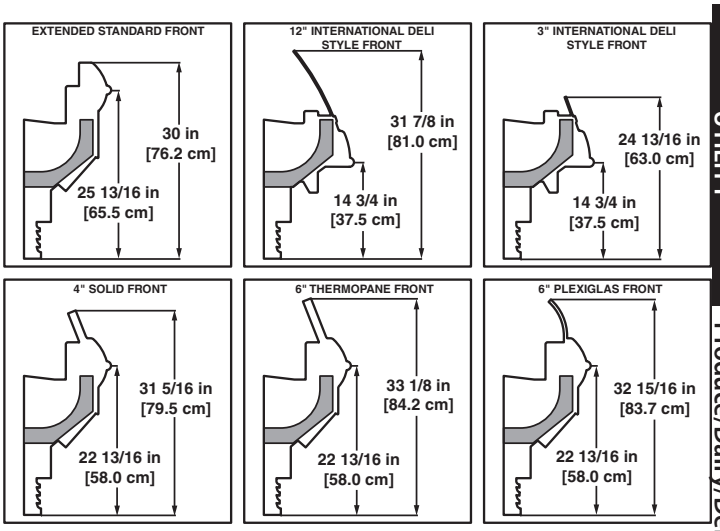

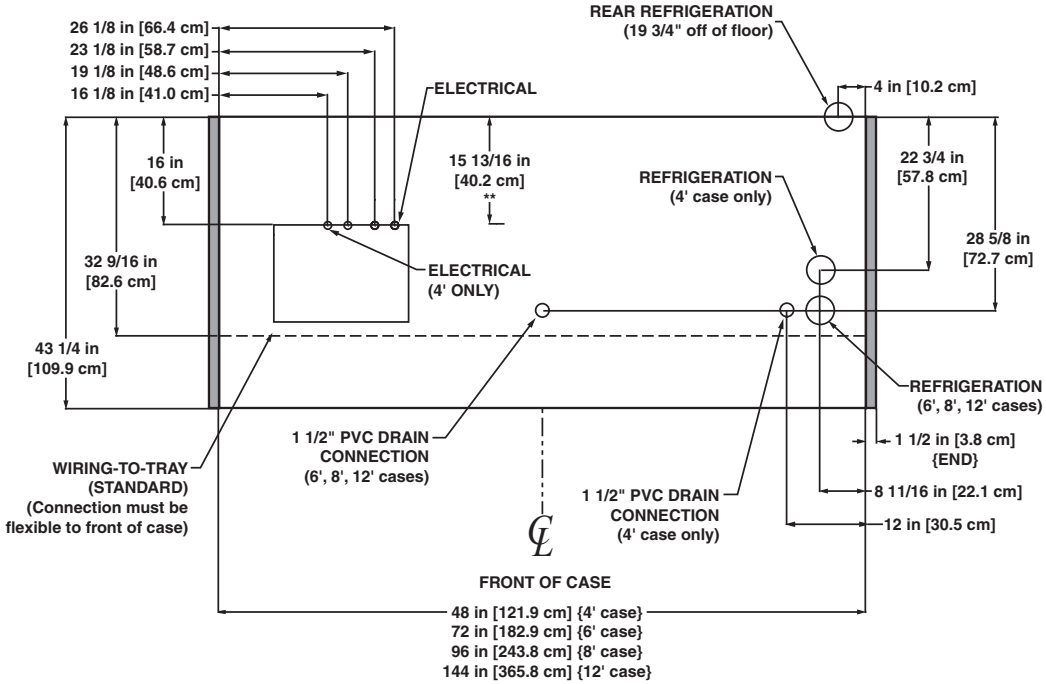

NOTES:

* STUB-UP AREA
** RECOMMENDED STUB-UP CENTERLINE FOR ELECTRICAL AND HUB DRAINS

- FRONT AND REAR SILL HEIGHTS VARY WITH BASEFRAME HEIGHT
- ENDS ADD APPROXIMATELY 1 INCH TO CASE HEIGHT
- A 2" MINIMUM AIR GAP IS REQUIRED BETWEEN THE REAR OF THE CASE AND A WALL
- SUCTION LINE (4' & 6') - 1/2", SUCTION LINE (8' & 12') - 5/8", LIQUID LINE (ALL LENGTHS) - 3/8"
- AVAILABLE SHELF SIZES: 10", 12", 14", 16" & 18"
- PRODUCT ON TOP SHELF SHOULD BE 3" BELOW DISCHARGE
- RECOMMENDED SHELF CONFIGURATION IN ROWS: 1-12" & 1-18"

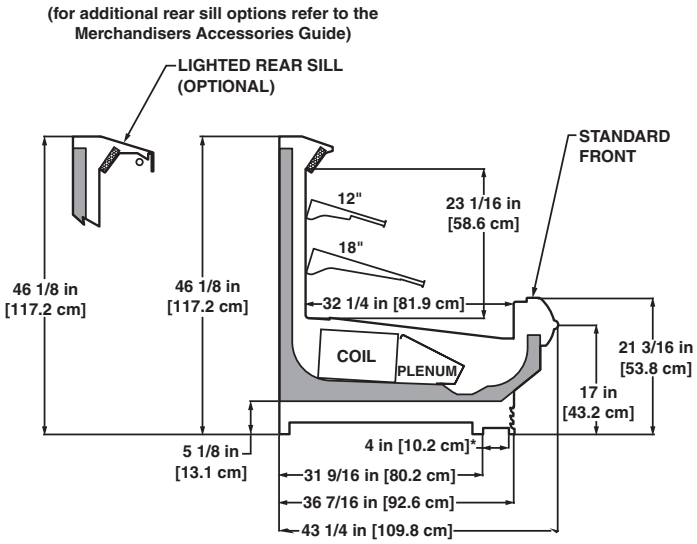

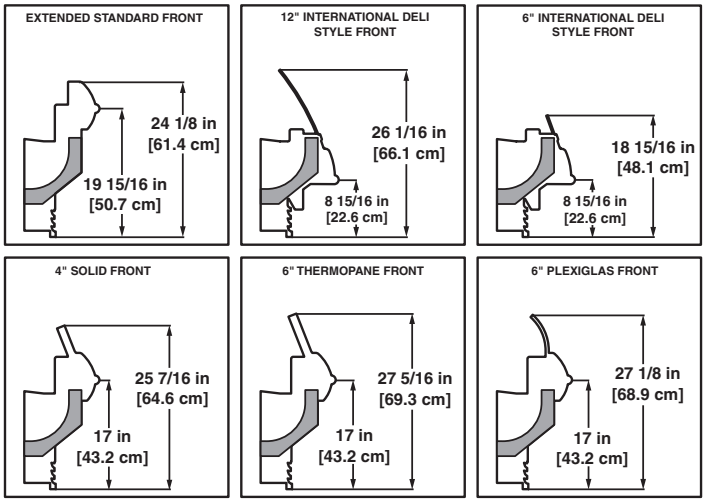

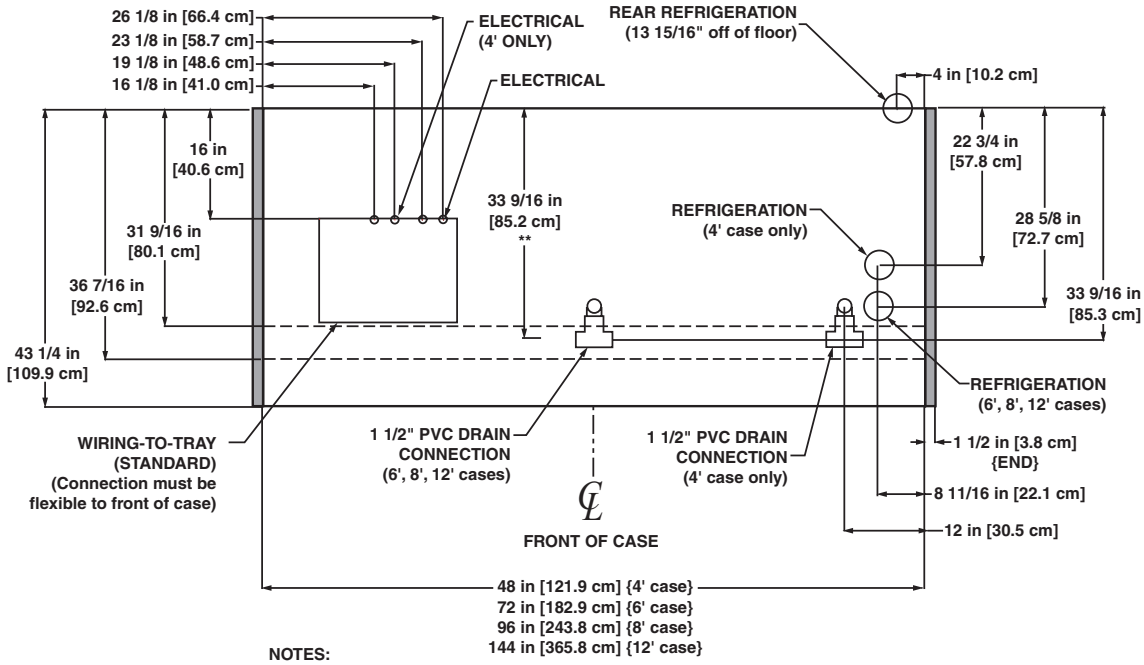

NOTES:

* STUB-UP AREA
** RECOMMENDED STUB-UP CENTERLINE FOR ELECTRICAL AND HUB DRAINS

- FRONT AND REAR SILL HEIGHTS VARY WITH BASEFRAME HEIGHT
- ENDS ADD APPROXIMATELY 1 INCH TO CASE HEIGHT
- A 2" MINIMUM AIR GAP IS REQUIRED BETWEEN THE REAR OF THE CASE AND A WALL
- SUCTION LINE (4' & 6') - 1/2", SUCTION LINE (8' & 12') - 5/8", LIQUID LINE (ALL LENGTHS) - 3/8"
- AVAILABLE SHELF SIZES: 10", 12", 14", 16" & 18"
- PRODUCT ON TOP SHELF SHOULD BE 3" BELOW DISCHARGE
- RECOMMENDED SHELF CONFIGURATION IN ROWS: 1-12" & 1-18"

Multi-Deck Frozen Food Merchandiser

O2.75MZD - 8′

Electrical Data

Model		Fans per Case	Standard Fans 120 Volts Amps	Standard Fans 120 Volts Watts	High Efficiency Fans 120 Volts Amps	High Efficiency Fans 120 Volts Watts	Anti-Condensate Heaters 120 Volts Amps	Anti-Condensate Heaters 120 Volts Watts	Defrost Heaters 208 Volts Amps	Defrost Heaters 208 Volts Watts	Defrost Heaters 240 Volts Amps	Defrost Heaters 240 Volts Watts
O2.75MZD	8′	3	1.02	51	0.45	33	1.45	174	15.38	3200	17.75	4260

Lighting Data

Model		Bulbs per Row	Bulb Length	Typical per Light Row 120 Volts Amps	Typical per Light Row 120 Volts Watts	Maximum Lighting 120 Volts Amps	Maximum Lighting 120 Volts Watts
O2.75MZD	8′	1	4′	0.47	56	0.47	56

Guidelines & Control Settings

Model	BTUH/ft[1]	Evaporator (°F)	Superheat Set Point @ Bulb (°F)	Discharge Air (°F)	Return Air (°F)	Discharge Air Velocity[2] (FPM)
O2.75MZD-F[3]	1005	-22	3-5	-8	11	340

[1] BTUHs/ft listed are for parallel operation. Conventional ratings may be approximated by multiplying listed rating by 1.04.

[2] Average discharge air velocity at peak of defrost.

[3] F=frozen food

Defrost Controls

Model	Defrosts Per Day	Run-Off Time (min)	Electric Defrost Fail-safe (min)	Electric Defrost Termination Temp. (°F)	Timed Off Defrost Fail-safe (min)	Timed Off Defrost Termination Temp. (°F)	Hot Gas Defrost Fail-safe (min)	Hot Gas Defrost Termination Temp. (°F)	Reverse Air Defrost Fail-safe (min)	Reverse Air Defrost Termination Temp. (°F)
O2.75MZD	4	13 - 15	45	65	- - -[4]	- - -	20	60	- - -	- - -

[4] NOTE: - - - not an option on this case model.

Defrost Schedule

No. Per Day	Hours
1	12 midnight
2	12 am - 12 pm
3	6 am - 2 pm - 10 pm
4	12 - 6 am - 12 - 6 pm

All measurements are taken per ARI 1200 - 2002 specifications.

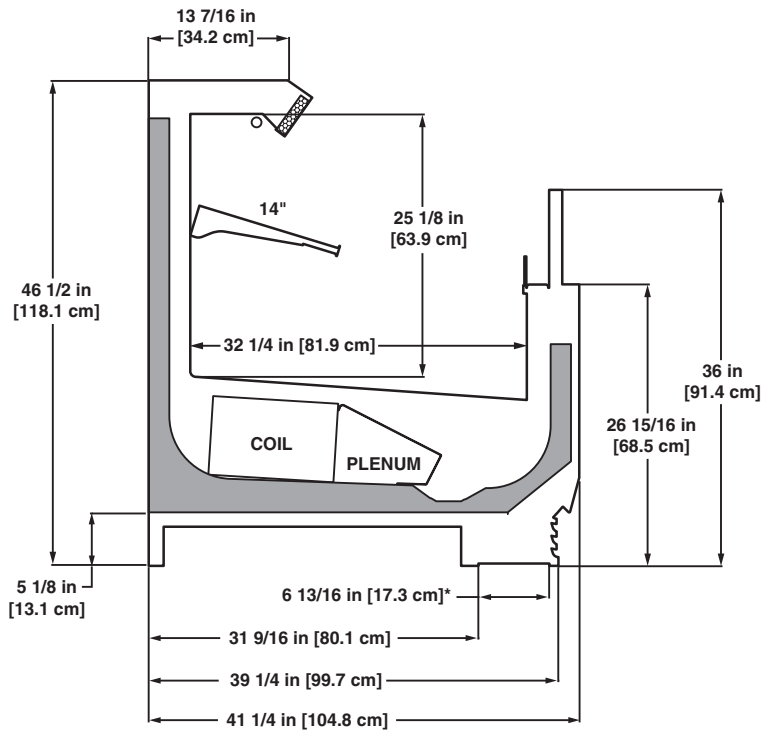

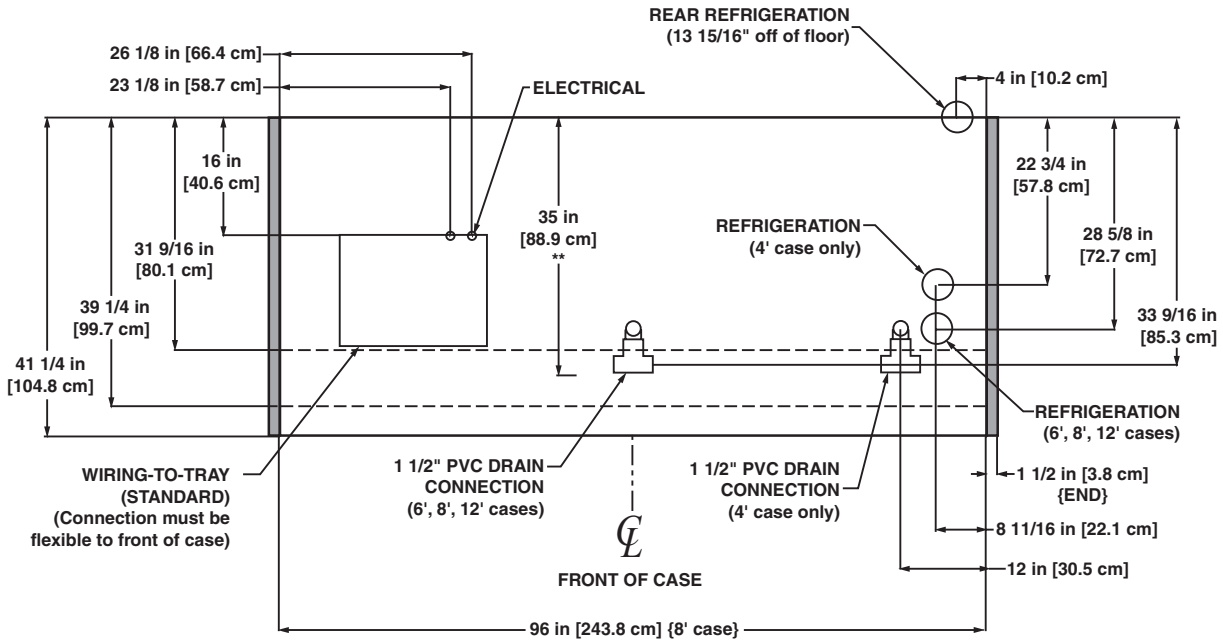

NOTES:

* STUB-UP AREA
** RECOMMENDED STUB-UP CENTERLINE FOR ELECTRICAL AND HUB DRAINS

- FRONT AND REAR SILL HEIGHTS VARY WITH BASEFRAME HEIGHT
- ENDS ADD APPROXIMATELY 1 INCH TO CASE HEIGHT
- A 2" MINIMUM AIR GAP IS REQUIRED BETWEEN THE REAR OF THE CASE AND A WALL
- SUCTION LINE - 7/8", LIQUID LINE - 3/8"
- AVAILABLE SHELF SIZES: 14"
- PRODUCT ON TOP SHELF SHOULD BE 4" BELOW DISCHARGE
- RECOMMENDED SHELF CONFIGURATION IN ROWS: 1-14"

Narrow Multi-Deck Produce/Dairy/Deli/Meat/Seafood Merchandiser

ON3UM - 4′, 6′, 8′ & 12′

Electrical Data

Model		Fans per Case	Standard Fans 120 Volts Amps	Standard Fans 120 Volts Watts	High Efficiency Fans 120 Volts Amps	High Efficiency Fans 120 Volts Watts	Anti-Condensate Heaters 120 Volts Amps	Anti-Condensate Heaters 120 Volts Watts	Defrost Heaters 208 Volts Amps	Defrost Heaters 208 Volts Watts	Defrost Heaters 240 Volts Amps	Defrost Heaters 240 Volts Watts
ON3UM	4′	2	1.00	60	0.15	9.2	0.14[1]	17	1.92	400	2.22	532
	6′	2	1.00	60	0.15	9.2	0.20[1]	24	2.88	600	3.33	798
	8′	3	1.50	90	0.23	13.8	0.25[1]	30	3.85	800	4.44	1065
	12′	4	2.00	120	0.31	18.4	0.38[1]	46	5.77	1200	6.67	1600

[1] Anti-condensate heater data for unlighted rear sill. For lighted rear sill, double the values.

Lighting Data

Model		Bulbs per Row	Bulb Length	Typical per Light Row 120 Volts Amps	Typical per Light Row 120 Volts Watts	Maximum Lighting 120 Volts Amps	Maximum Lighting 120 Volts Watts
ON3UM	4′	1	4′	0.23	28	0.93	112
	6′	2	3′	0.37	44	1.47	176
	8′	2	4′	0.47	56	1.87	224
	12′	3	4′	0.70	84	2.80	336

Guidelines & Control Settings

Model[2]	BTUH/ft[3]	Coil Type	Evaporator (°F)	Superheat Set Point @ Bulb (°F)	Discharge Air (°F)	Return Air (°F)	Discharge Air Velocity[5] (FPM)
ON3UM	824[4]	Enh.	22	6-8	28	35	230

[2] Model ON3UM only available for meat application with a thermopane glass front or a curved plexiglas front.

[3] BTUHs/ft listed are for parallel operation. Conventional ratings may be approximated by multiplying listed rating by 1.04.

[4] High efficiency fans reduce refrigeration load by 96 BTUHs/fan.

[5] Average discharge air velocity at peak of defrost.

Defrost Controls

Model	Defrosts Per Day	Run-Off Time (min)	Electric Defrost Fail-safe (min)	Electric Defrost Termination Temp. (°F)	Timed Off Defrost Fail-safe (min)	Timed Off Defrost Termination Temp. (°F)	Hot Gas Defrost Fail-safe (min)	Hot Gas Defrost Termination Temp. (°F)	Reverse Air Defrost Fail-safe (min)	Reverse Air Defrost Termination Temp. (°F)
ON3UM	3	6 - 8	40	47	45	45	26	45	45	45

Medium Temperature Defrost Schedule

No. Per Day	Hours
1	12 midnight
2	12 am - 12 pm
3	6 am - 2 pm - 10 pm
4	12 - 6 am - 12 - 6 pm

All measurements are taken per ARI 1200 - 2002 specifications.

NSF COMPONENT
c UL us
Hill PHOENIX EXCELLENCE
A DOVER COMPANY

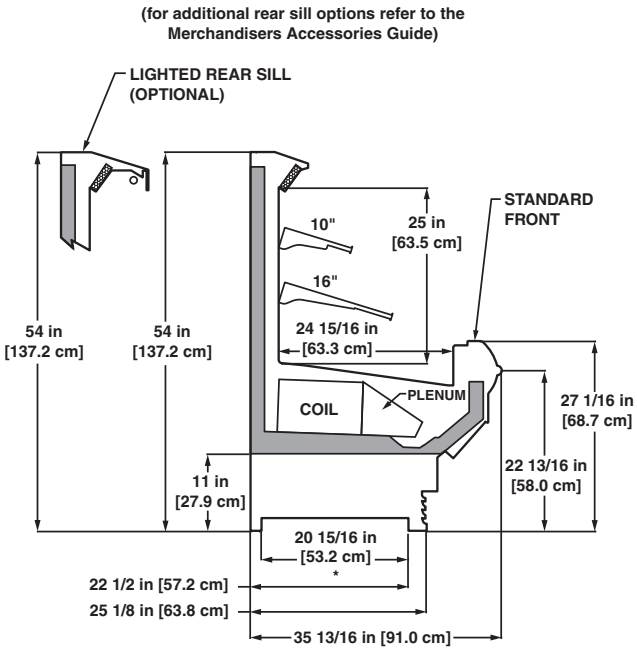

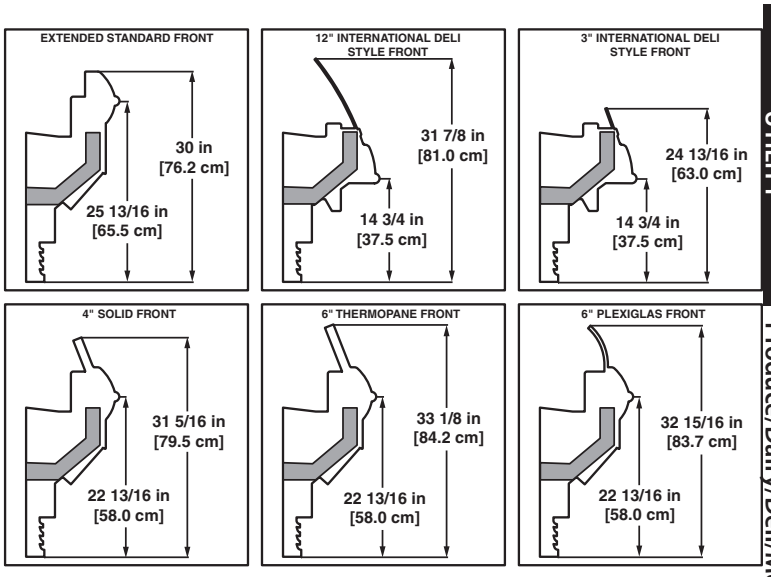

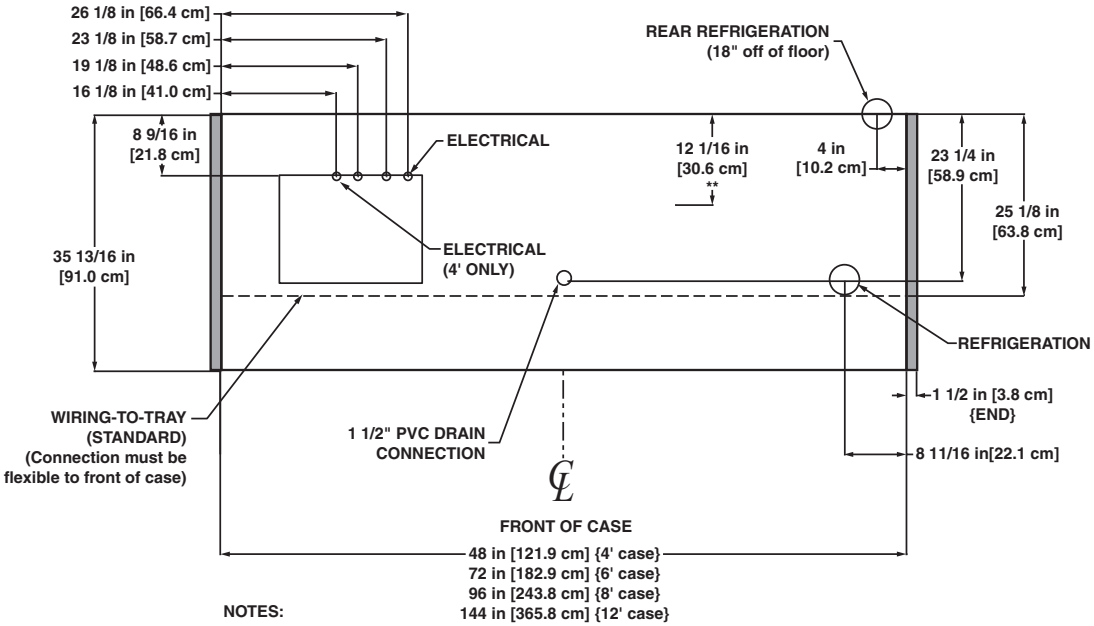

NOTES:

* STUB-UP AREA
** RECOMMENDED STUB-UP CENTERLINE FOR ELECTRICAL AND HUB DRAINS

- FRONT AND REAR SILL HEIGHTS VARY WITH BASEFRAME HEIGHT
- ENDS ADD APPROXIMATELY 1 INCH TO CASE HEIGHT
- A 2" MINIMUM AIR GAP IS REQUIRED BETWEEN THE REAR OF THE CASE AND A WALL
- SUCTION LINE (4' & 6') - 1/2", SUCTION LINE (8' & 12') - 5/8", LIQUID LINE (ALL LENGTHS) - 3/8"
- AVAILABLE SHELF SIZES: 10", 12", 14", 16" & 18"
- PRODUCT ON TOP SHELF SHOULD BE 3" BELOW DISCHARGE
- RECOMMENDED SHELF CONFIGURATION IN ROWS: 1-10" & 1-16"

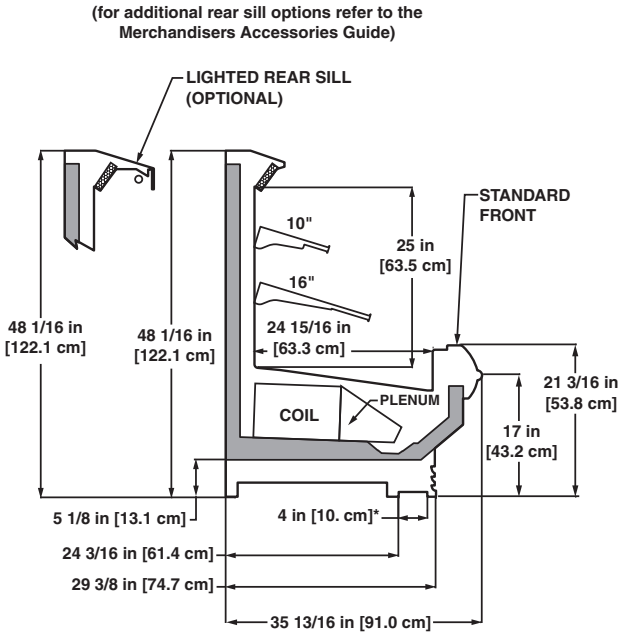

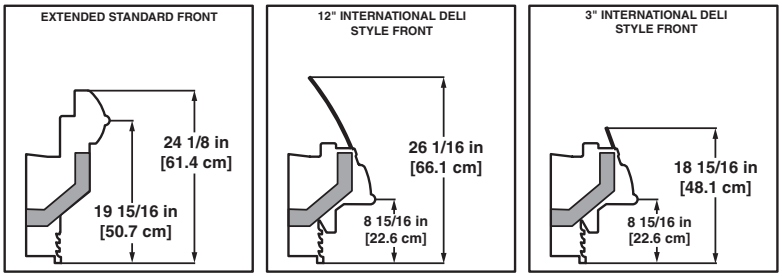

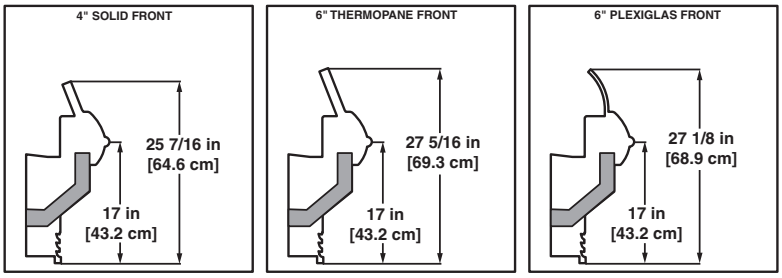

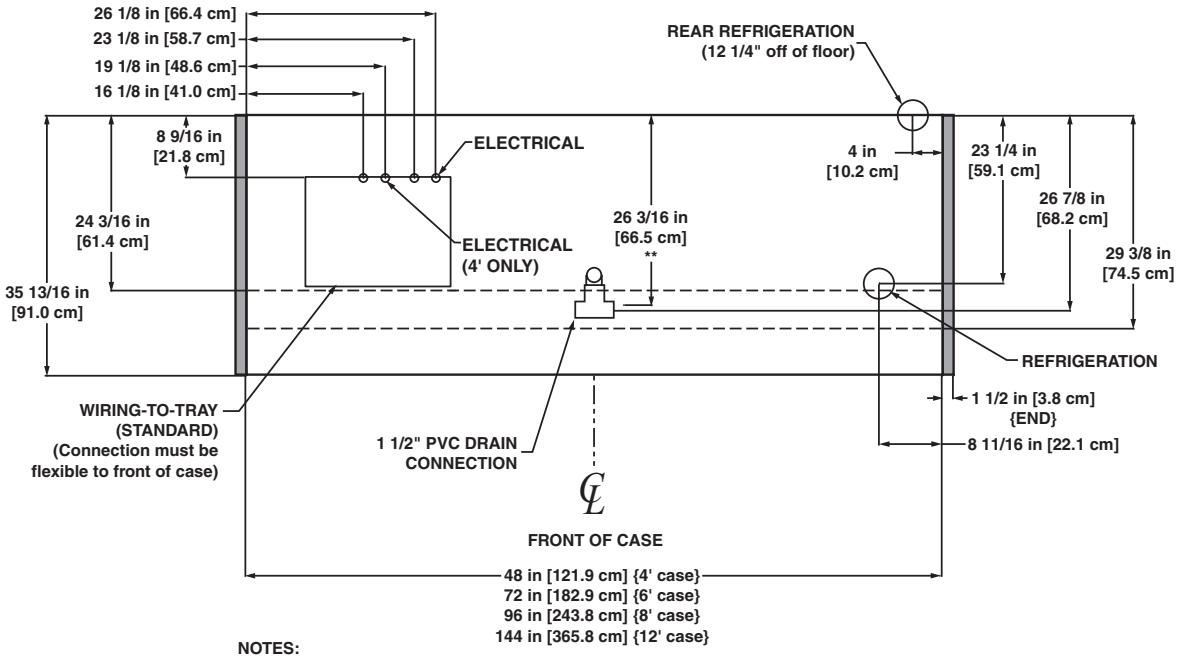

NOTES:

* STUB-UP AREA
** RECOMMENDED STUB-UP CENTERLINE FOR ELECTRICAL AND HUB DRAINS

- FRONT AND REAR SILL HEIGHTS VARY WITH BASEFRAME HEIGHT
- ENDS ADD APPROXIMATELY 1 INCH TO CASE HEIGHT
- A 2" MINIMUM AIR GAP IS REQUIRED BETWEEN THE REAR OF THE CASE AND A WALL
- SUCTION LINE (4' & 6') - 1/2", SUCTION LINE (8' & 12') - 5/8", LIQUID LINE (ALL LENGTHS) - 3/8"
- AVAILABLE SHELF SIZES: 10", 12", 14", 16" & 18"
- PRODUCT ON TOP SHELF SHOULD BE 3" BELOW DISCHARGE
- RECOMMENDED SHELF CONFIGURATION IN ROWS: 1-10" & 1-16"

NSF COMPONENT c UL us

A DOVER COMPANY

Multi-Deck Produce/Dairy/Deli/Meat/Seafood Merchandiser

O3UM - 4′, 6′, 8′ & 12′

Electrical Data

Model		Fans per Case	Standard Fans 120 Volts Amps	Standard Fans 120 Volts Watts	High Efficiency Fans 120 Volts Amps	High Efficiency Fans 120 Volts Watts	Anti-Condensate Heaters 120 Volts Amps	Anti-Condensate Heaters 120 Volts Watts	Defrost Heaters 208 Volts Amps	Defrost Heaters 208 Volts Watts	Defrost Heaters 240 Volts Amps	Defrost Heaters 240 Volts Watts
O3UM	4′	2	1.00	60	0.15	9.2	0.14[1]	17	1.92	400	2.22	532
	6′	2	1.00	60	0.15	9.2	0.20[1]	24	2.88	600	3.33	798
	8′	3	1.50	90	0.23	13.8	0.25[1]	30	3.85	800	4.44	1065
	12′	4	2.00	120	0.31	18.4	0.38[1]	46	5.77	1200	6.67	1600

[1] Anti-condensate heater data for unlighted rear sill. For lighted rear sill, double the values.

Lighting Data

Model		Bulbs per Row	Bulb Length	Typical per Light Row 120 Volts Amps	Typical per Light Row 120 Volts Watts	Maximum Lighting 120 Volts Amps	Maximum Lighting 120 Volts Watts
O3UM	4′	1	4′	0.23	28	0.93	112
	6′	2	3′	0.37	44	1.47	176
	8′	2	4′	0.47	56	1.87	224
	12′	3	4′	0.70	84	2.80	336

Guidelines & Control Settings

Model[2]	BTUH/ft[3]	Coil Type	Evaporator (°F)	Superheat Set Point @ Bulb (°F)	Discharge Air (°F)	Return Air (°F)	Discharge Air Velocity[5] (FPM)
O3UM	1030[4]	Enh.	22	6-8	27	45	225

[2] Model O3UM only available for meat application with a thermopane glass front or a curved plexiglas front.

[3] BTUHs/ft listed are for parallel operation. Conventional ratings may be approximated by multiplying listed rating by 1.04.

[4] High efficiency fans reduce refrigeration load by 96 BTUHs/fan.

[5] Average discharge air velocity at peak of defrost.

Defrost Controls

Model	Defrosts Per Day	Run-Off Time (min)	Electric Defrost Fail-safe (min)	Electric Defrost Termination Temp. (°F)	Timed Off Defrost Fail-safe (min)	Timed Off Defrost Termination Temp. (°F)	Hot Gas Defrost Fail-safe (min)	Hot Gas Defrost Termination Temp. (°F)	Reverse Air Defrost Fail-safe (min)	Reverse Air Defrost Termination Temp. (°F)
O3UM	3	6 - 8	40	47	45	45	26	45	45	45

Medium Temperature Defrost Schedule

No. Per Day	Hours
1	12 midnight
2	12 am - 12 pm
3	6 am - 2 pm - 10 pm
4	12 - 6 am - 12 - 6 pm

All measurements are taken per ARI 1200 - 2002 specifications.

NSF COMPONENT
c UL us
HILL PHOENIX EXCELLENCE
A DOVER COMPANY

(for additional rear sill options refer to the Merchandisers Accessories Guide)

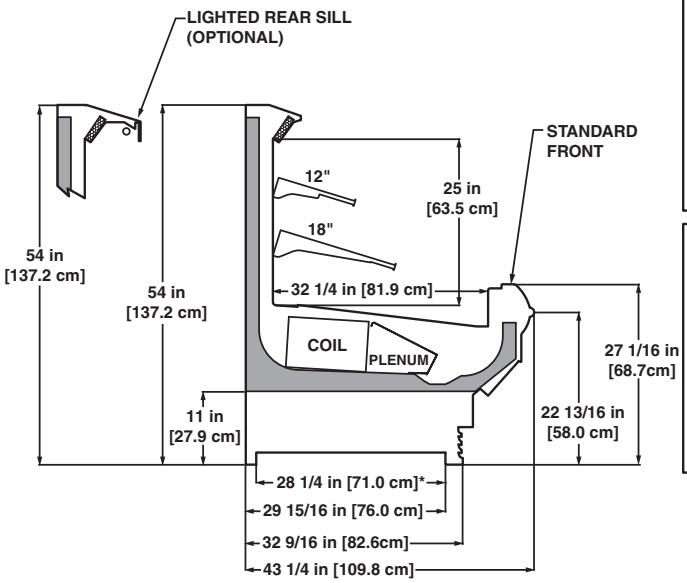

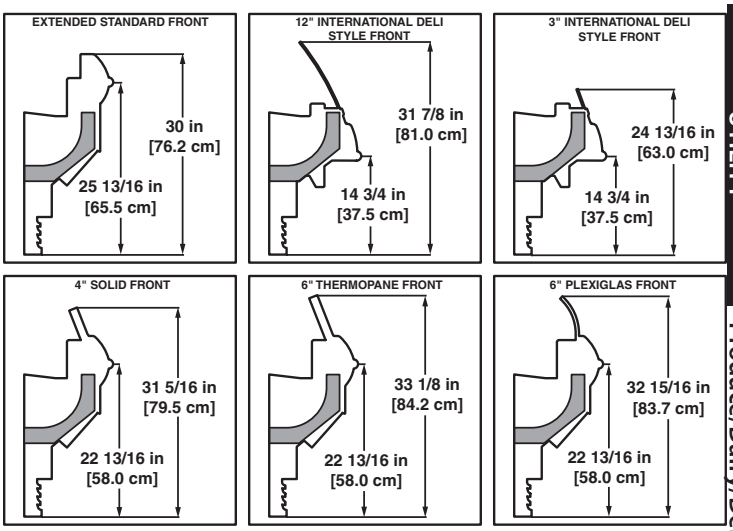

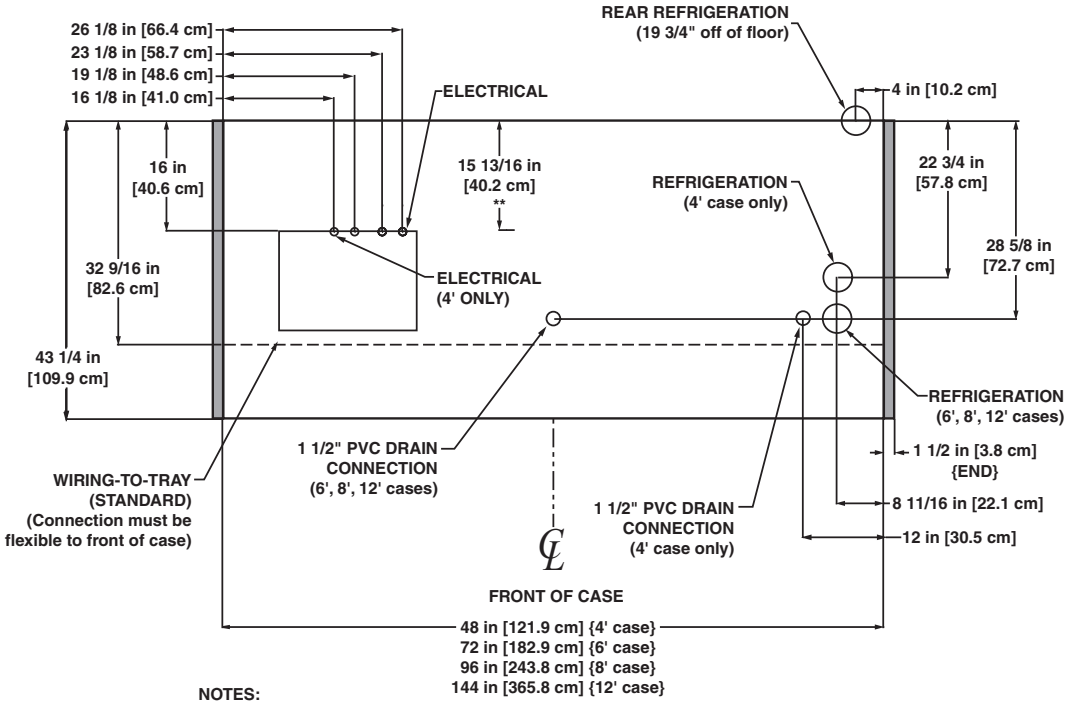

NOTES:

* STUB-UP AREA
** RECOMMENDED STUB-UP CENTERLINE FOR ELECTRICAL AND HUB DRAINS

- FRONT AND REAR SILL HEIGHTS VARY WITH BASEFRAME HEIGHT
- ENDS ADD APPROXIMATELY 1 INCH TO CASE HEIGHT
- A 2" MINIMUM AIR GAP IS REQUIRED BETWEEN THE REAR OF THE CASE AND A WALL
- SUCTION LINE (4' & 6') - 1/2", SUCTION LINE (8' & 12') - 5/8", LIQUID LINE (ALL LENGTHS) - 3/8"
- AVAILABLE SHELF SIZES: 10", 12", 14", 16" & 18"
- PRODUCT ON TOP SHELF SHOULD BE 3" BELOW DISCHARGE
- RECOMMENDED SHELF CONFIGURATION IN ROWS: 1-12" & 1-18"

NSF COMPONENT c UL us

A DOVER COMPANY

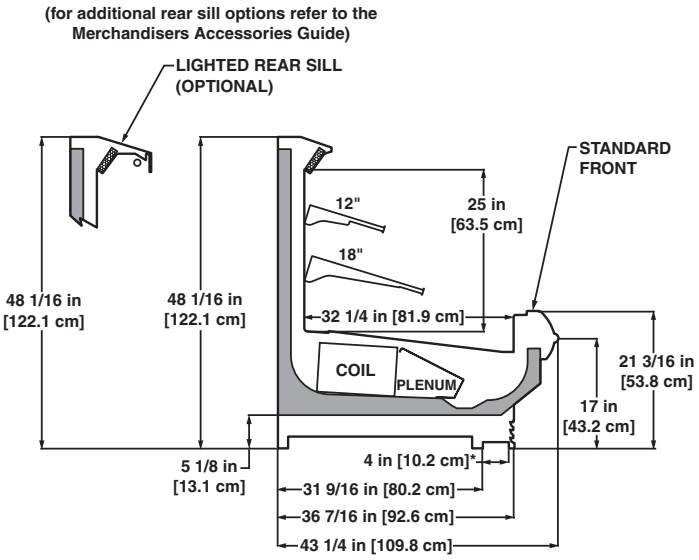

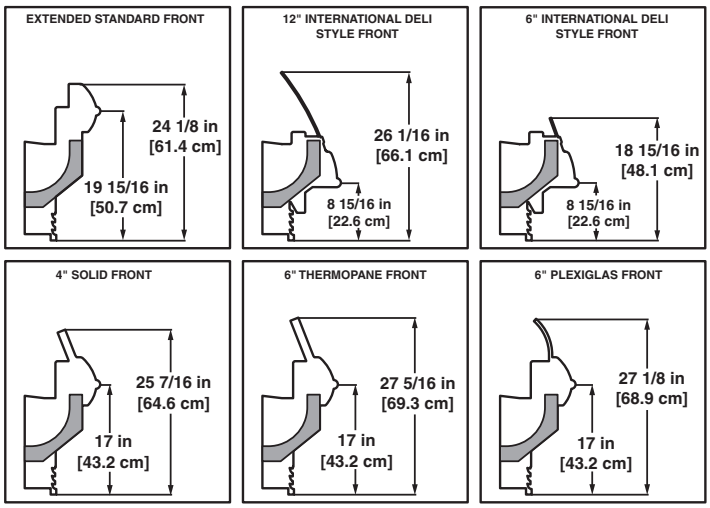

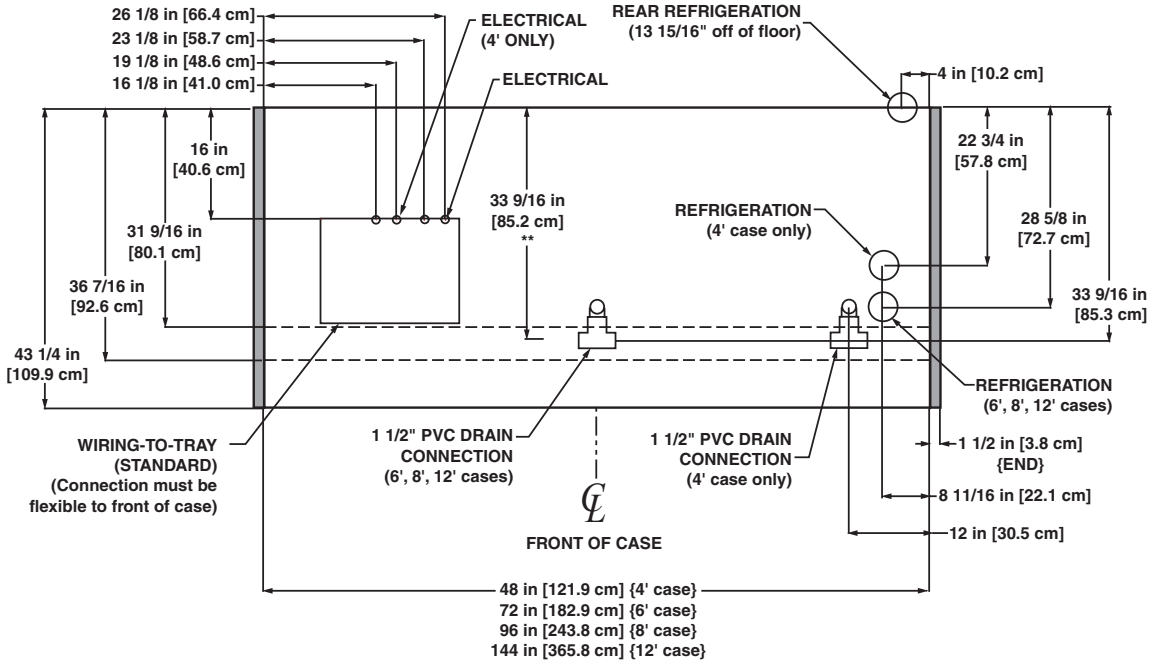

NOTES:

* STUB-UP AREA
** RECOMMENDED STUB-UP CENTERLINE FOR ELECTRICAL AND HUB DRAINS

- FRONT AND REAR SILL HEIGHTS VARY WITH BASEFRAME HEIGHT
- ENDS ADD APPROXIMATELY 1 INCH TO CASE HEIGHT
- A 2" MINIMUM AIR GAP IS REQUIRED BETWEEN THE REAR OF THE CASE AND A WALL
- SUCTION LINE (4' & 6') - 1/2", SUCTION LINE (8' & 12') - 5/8", LIQUID LINE (ALL LENGTHS) - 3/8"
- AVAILABLE SHELF SIZES: 10", 12", 14", 16" & 18"
- PRODUCT ON TOP SHELF SHOULD BE 3" BELOW DISCHARGE
- RECOMMENDED SHELF CONFIGURATION IN ROWS: 1-12" & 1-18"

Wide Multi-Deck Produce/Dairy/Deli Merchandiser

OW3UM - 8′ & 12′

Electrical Data

Model		Fans per Case	Standard Fans		High Efficiency Fans		Anti-Condensate Heaters		Defrost Heaters			
			120 Volts		120 Volts		120 Volts		208 Volts		240 Volts	
			Amps	Watts	Amps	Watts	Amps	Watts	Amps	Watts	Amps	Watts
OW3UM	8′	3	1.50	90	0.23	13.8	0.25[1]	30	3.85	800	4.44	1065
	12′	4	2.00	120	0.31	18.4	0.38[1]	46	5.77	1200	6.67	1600

[1] Anti-condensate heater data for unlighted rear sill. For lighted rear sill, double the values.

Lighting Data

Model		Bulbs per Row	Bulb Length	Typical per Light Row		Maximum Lighting	
				120 Volts		120 Volts	
				Amps	Watts	Amps	Watts
OW3UM	8′	2	4′	0.47	56	1.87	224
	12′	3	4′	0.70	84	2.80	336

Guidelines & Control Settings

Model	BTUH/ft[2]	Coil Type	Evaporator (°F)	Superheat Set Point @ Bulb (°F)	Discharge Air (°F)	Return Air (°F)	Discharge Air Velocity[4] (FPM)
OW3UM	1349[3]	Enh.	22	6-8	27	45	225

[2] BTUHs/ft listed are for parallel operation. Conventional ratings may be approximated by multiplying listed rating by 1.04.

[3] High efficiency fans reduce refrigeration load by 96 BTUHs/fan.

[4] Average discharge air velocity at peak of defrost.

Defrost Controls

Model	Defrosts Per Day	Run-Off Time (min)	Electric Defrost		Timed Off Defrost		Hot Gas Defrost		Reverse Air Defrost	
			Fail-safe (min)	Termination Temp. (°F)	Fail-safe (min)	Termination Temp. (°F)	Fail-safe (min)	Termination Temp. (°F)	Fail-safe (min)	Termination Temp. (°F)
OW3UM	3	6 - 8	40	47	45	45	26	45	45	45

Medium Temperature Defrost Schedule

No. Per Day	Hours
1	12 midnight
2	12 am - 12 pm
3	6 am - 2 pm - 10 pm
4	12 - 6 am - 12 - 6 pm

All measurements are taken per ARI 1200 - 2002 specifications.

(for additional rear sill options refer to the Merchandisers Accessories Guide)

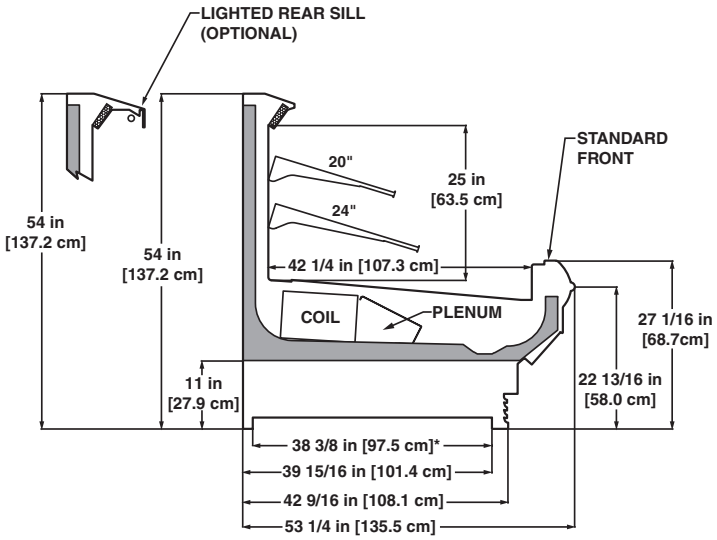

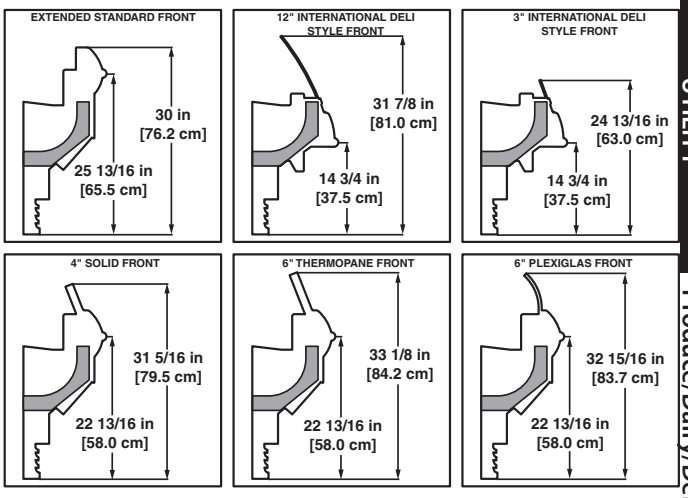

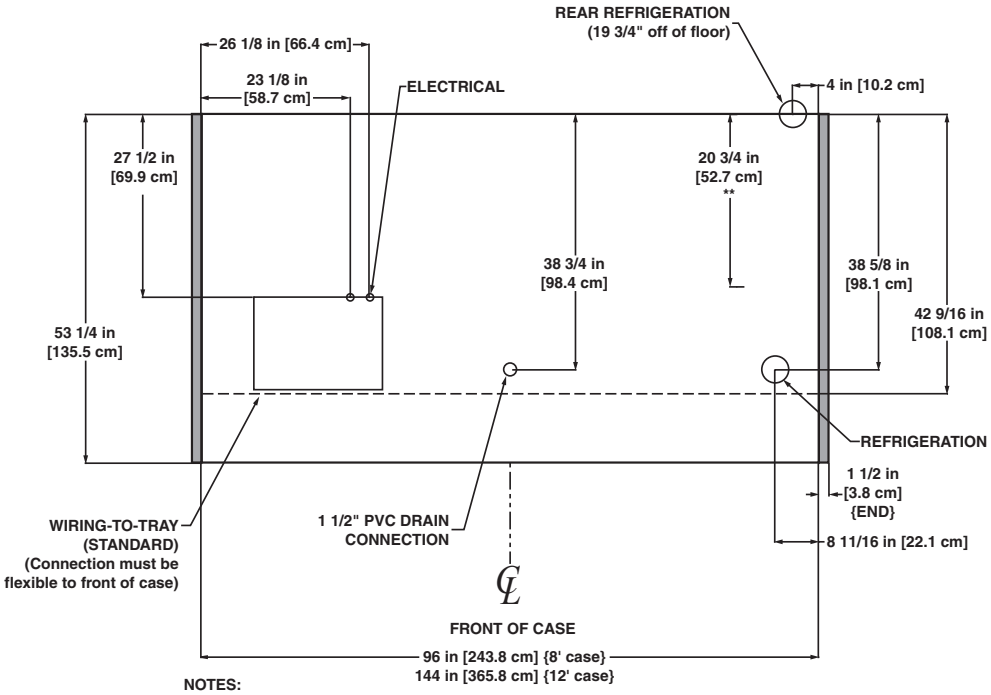

NOTES:

* STUB-UP AREA
** RECOMMENDED STUB-UP CENTERLINE FOR ELECTRICAL AND HUB DRAINS

- FRONT AND REAR SILL HEIGHTS VARY WITH BASEFRAME HEIGHT
- ENDS ADD APPROXIMATELY 1 INCH TO CASE HEIGHT
- A 2" MINIMUM AIR GAP IS REQUIRED BETWEEN THE REAR OF THE CASE AND A WALL
- SUCTION LINE (8' & 12') - 5/8", LIQUID LINE (ALL LENGTHS) - 3/8"
- AVAILABLE SHELF SIZES: 10", 12", 14", 16", 18", 20", 22" & 24"
- PRODUCT ON TOP SHELF SHOULD BE 3" BELOW DISCHARGE
- RECOMMENDED SHELF CONFIGURATION IN ROWS: 1-20" & 1-24"

NSF COMPONENT c UL us

A DOVER COMPANY

Multi-Deck Produce/Dairy/Deli Merchandiser

O3UD - 4′, 6′, 8′ & 12′

Electrical Data

Model		Fans per Case	Standard Fans 120 Volts Amps	Standard Fans 120 Volts Watts	High Efficiency Fans 120 Volts Amps	High Efficiency Fans 120 Volts Watts	Anti-Condensate Heaters 120 Volts Amps	Anti-Condensate Heaters 120 Volts Watts	Defrost Heaters 208 Volts Amps	Defrost Heaters 208 Volts Watts	Defrost Heaters 240 Volts Amps	Defrost Heaters 240 Volts Watts
O3UD	4′	2	1.00	60	0.15	9.2	0.14	17	1.92	400	2.22	532
	6′	2	1.00	60	0.15	9.2	0.20	24	2.88	600	3.33	798
	8′	3	1.50	90	0.23	13.8	0.25	30	3.85	800	4.44	1065
	12′	4	2.00	120	0.31	18.4	0.38	46	5.77	1200	6.67	1600

Lighting Data

Model		Bulbs per Row	Bulb Length	Typical per Light Row 120 Volts Amps	Typical per Light Row 120 Volts Watts	Maximum Lighting 120 Volts Amps	Maximum Lighting 120 Volts Watts
O3UD	4′	1	4′	0.23	28	0.70	84
	6′	2	3′	0.37	44	1.10	132
	8′	2	4′	0.47	56	1.40	168
	12′	3	4′	0.70	84	2.10	252

Guidelines & Control Settings

Model	Front Sill Heights	BTUH/ft[1]	Coil[2] Type	Evaporator (°F)	Superheat Set Point @ Bulb (°F)	Discharge Air (°F)	Return Air (°F)	Discharge Air Velocity[3] (FPM)
O3UD	Std. Dairy	1030	Enh.	22	6-8	30	45	225

[1] BTUHs/ft listed are for parallel operation. Conventional ratings may be approximated by multiplying listed rating by 1.04.

[2] High efficiency fans reduce refrigeration load by 96 BTUHs/fan.

[3] Average discharge air velocity at peak of defrost.

Defrost Controls

Model	Defrosts Per Day	Run-Off Time (min)	Electric Defrost Fail-safe (min)	Electric Defrost Termination Temp. (°F)	Timed Off Defrost Fail-safe (min)	Timed Off Defrost Termination Temp. (°F)	Hot Gas Defrost Fail-safe (min)	Hot Gas Defrost Termination Temp. (°F)	Reverse Air Defrost Fail-safe (min)	Reverse Air Defrost Termination Temp. (°F)
O3UD	3	6 - 8	40	47	45	45	26	45	45	45

Medium Temperature Defrost Schedule

No. Per Day	Hours
1	12 midnight
2	12 am - 12 pm
3	6 am - 2 pm - 10 pm
4	12 - 6 am - 12 - 6 pm

All measurements are taken per ARI 1200 - 2002 specifications.

NSF COMPONENT
c UL us
HILL PHOENIX EXCELLENCE
A DOVER COMPANY

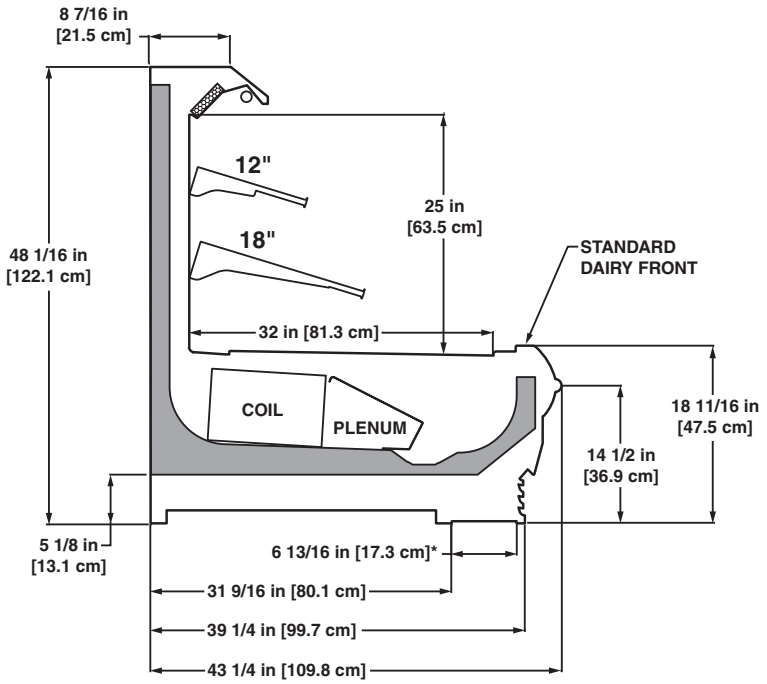

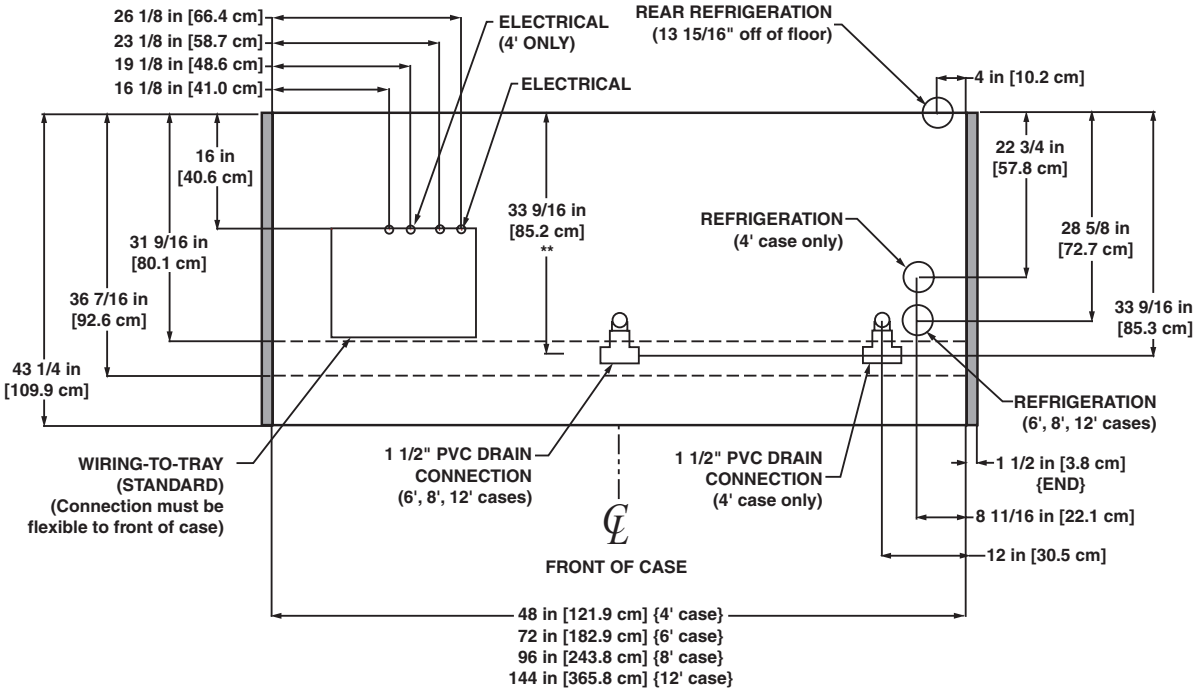

NOTES:

* STUB-UP AREA
** RECOMMENDED STUB-UP CENTERLINE FOR ELECTRICAL AND HUB DRAINS

- FRONT AND REAR SILL HEIGHTS VARY WITH BASEFRAME HEIGHT
- ENDS ADD APPROXIMATELY 1 INCH TO CASE HEIGHT
- A 2" MINIMUM AIR GAP IS REQUIRED BETWEEN THE REAR OF THE CASE AND A WALL
- SUCTION LINE (4' & 6') - 1/2", SUCTION LINE (8' & 12') - 5/8", LIQUID LINE (ALL LENGTHS) - 3/8"
- AVAILABLE SHELF SIZES: 10", 12", 14", 16" & 18"
- PRODUCT ON TOP SHELF SHOULD BE 3" BELOW DISCHARGE
- RECOMMENDED SHELF CONFIGURATION IN ROWS: 1-12" & 1-18"

NSF COMPONENT c UL us

A DOVER COMPANY

Narrow Multi-Deck Produce/Dairy/Deli/Meat/Seafood Merchandiser

ON3.5UM - 4′, 6′, 8′ & 12′

Electrical Data

Model		Fans per Case	Standard Fans 120 Volts Amps	Standard Fans 120 Volts Watts	High Efficiency Fans 120 Volts Amps	High Efficiency Fans 120 Volts Watts	Anti-Condensate Heaters 120 Volts Amps	Anti-Condensate Heaters 120 Volts Watts	Defrost Heaters 208 Volts Amps	Defrost Heaters 208 Volts Watts	Defrost Heaters 240 Volts Amps	Defrost Heaters 240 Volts Watts
ON3.5UM	4′	2	1.00	60	0.15	9.2	0.14[1]	17	1.92	400	2.22	532
	6′	2	1.00	60	0.15	9.2	0.20[1]	24	2.88	600	3.33	798
	8′	3	1.50	90	0.23	13.8	0.25[1]	30	3.85	800	4.44	1065
	12′	4	2.00	120	0.31	18.4	0.38[1]	46	5.77	1200	6.67	1600

[1] Anti-condensate heater data for unlighted rear sill. For lighted rear sill, double the values.

Lighting Data

Model		Bulbs per Row	Bulb Length	Typical per Light Row 120 Volts Amps	Typical per Light Row 120 Volts Watts	Maximum Lighting 120 Volts Amps	Maximum Lighting 120 Volts Watts
ON3.5UM	4′	1	4′	0.23	28	1.67	140
	6′	2	3′	0.37	44	1.83	220
	8′	2	4′	0.47	56	2.33	280
	12′	3	4′	0.70	84	3.50	420

Guidelines & Control Settings

Model[2]	BTUH/ft[3]	Coil Type	Evaporator (°F)	Superheat Set Point @ Bulb (°F)	Discharge Air (°F)	Return Air (°F)	Discharge Air Velocity[5] (FPM)
ON3.5UM	1019[4]	Enh.	22	6-8	28	35	204

[2] Model ON3.5UM only available for meat application with a thermopane glass front or a curved plexiglas front.

[3] BTUHs/ft listed are for parallel operation. Conventional ratings may be approximated by multiplying listed rating by 1.04.

[4] High efficiency fans reduce refrigeration load by 96 BTUHs/fan.

[5] Average discharge air velocity at peak of defrost.

Defrost Controls

Model	Defrosts Per Day	Run-Off Time (min)	Electric Defrost Fail-safe (min)	Electric Defrost Termination Temp. (°F)	Timed Off Defrost Fail-safe (min)	Timed Off Defrost Termination Temp. (°F)	Hot Gas Defrost Fail-safe (min)	Hot Gas Defrost Termination Temp. (°F)	Reverse Air Defrost Fail-safe (min)	Reverse Air Defrost Termination Temp. (°F)
ON3.5UM	3	6 - 8	40	47	45	45	26	45	45	45

Medium Temperature Defrost Schedule

No. Per Day	Hours
1	12 midnight
2	12 am - 12 pm
3	6 am - 2 pm - 10 pm
4	12 - 6 am - 12 - 6 pm

All measurements are taken per ARI 1200 - 2002 specifications.

Hill PHOENIX EXCELLENCE
A DOVER COMPANY
NSF COMPONENT
c UL us

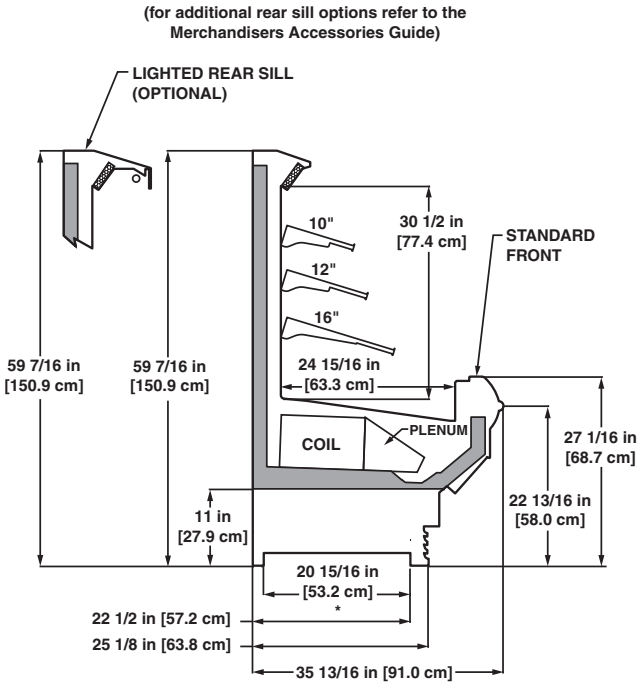

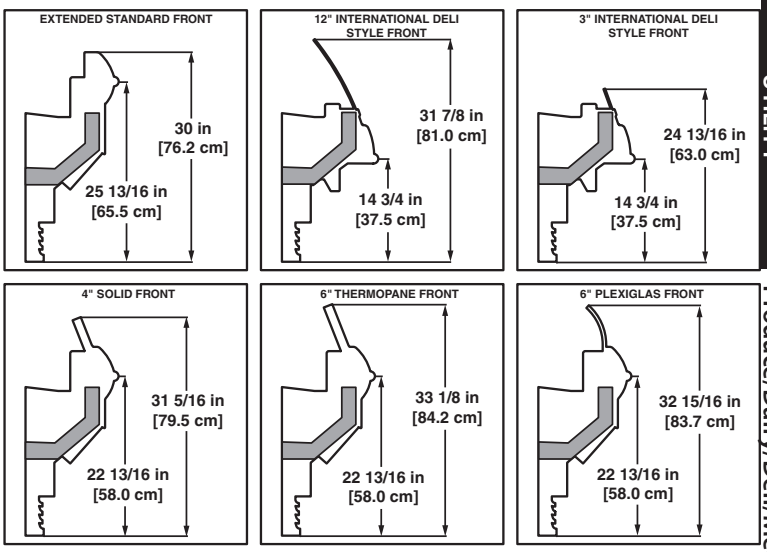

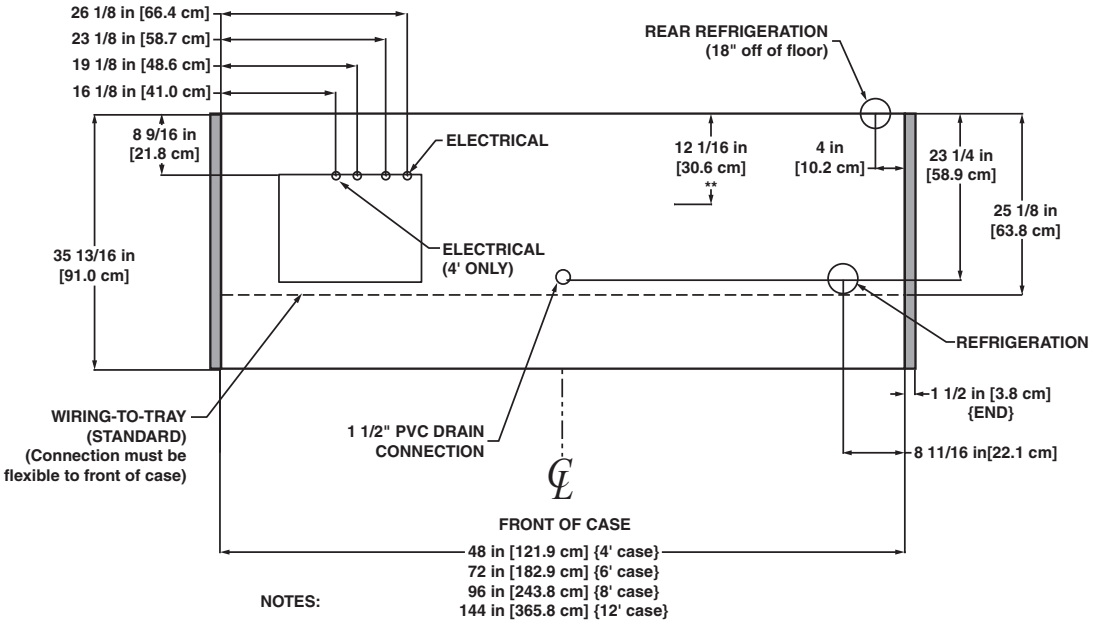

NOTES:

* STUB-UP AREA
** RECOMMENDED STUB-UP CENTERLINE FOR ELECTRICAL AND HUB DRAINS

- FRONT AND REAR SILL HEIGHTS VARY WITH BASEFRAME HEIGHT
- ENDS ADD APPROXIMATELY 1 INCH TO CASE HEIGHT
- A 2" MINIMUM AIR GAP IS REQUIRED BETWEEN THE REAR OF THE CASE AND A WALL
- SUCTION LINE (4' & 6') - 5/8", SUCTION LINE (8' & 12') - 7/8", LIQUID LINE (ALL LENGTHS) - 3/8"
- AVAILABLE SHELF SIZES: 10", 12", 14", 16" & 18"
- PRODUCT ON TOP SHELF SHOULD BE 3" BELOW DISCHARGE
- RECOMMENDED SHELF CONFIGURATION IN ROWS: 1-10", 1-12" & 1-16"

(for additional rear sill options refer to the Merchandisers Accessories Guide)

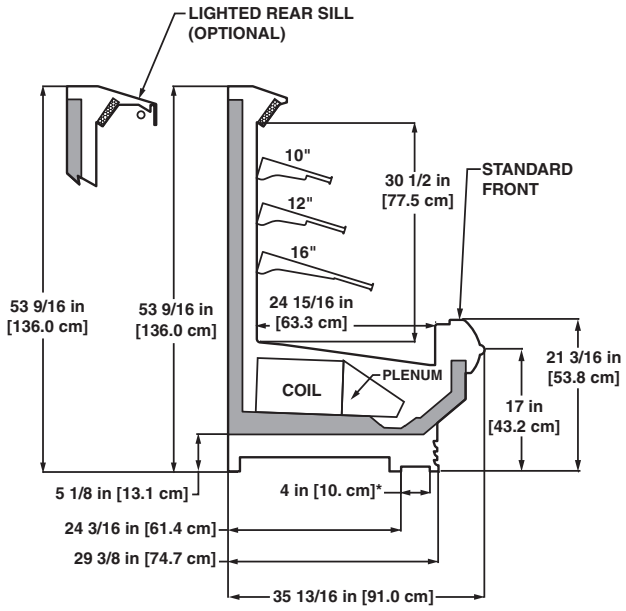

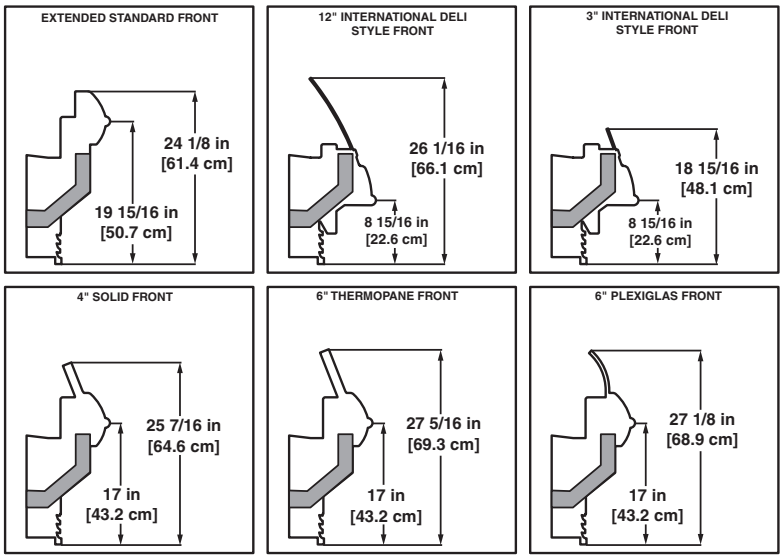

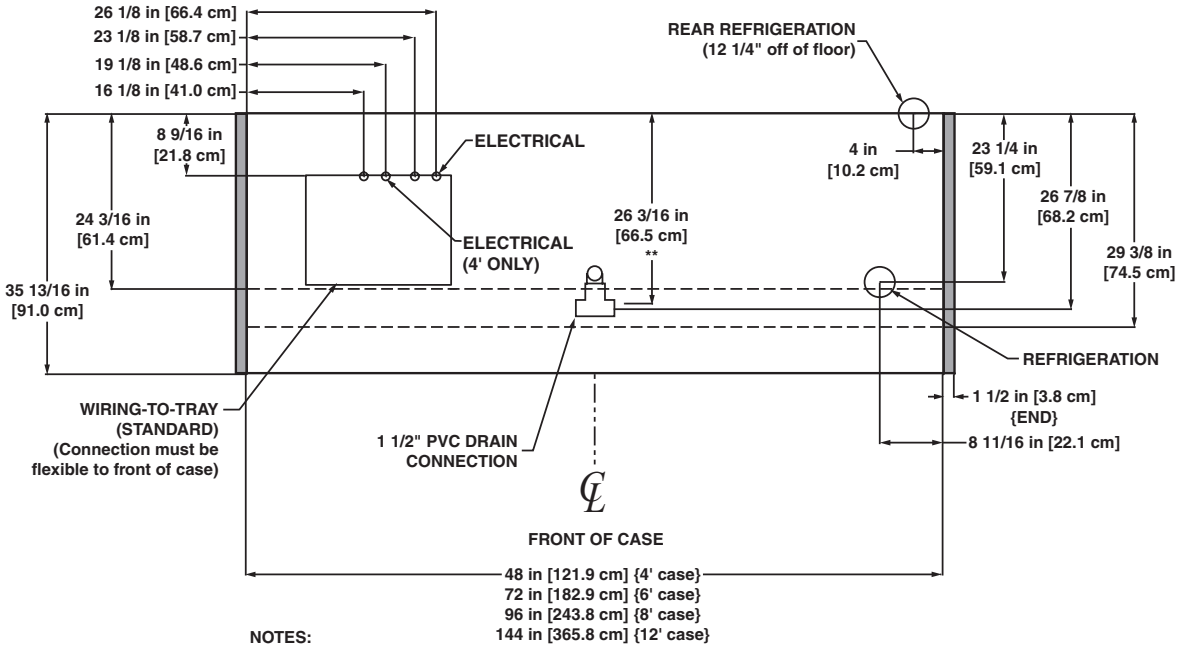

NOTES:

* STUB-UP AREA
** RECOMMENDED STUB-UP CENTERLINE FOR ELECTRICAL AND HUB DRAINS

- FRONT AND REAR SILL HEIGHTS VARY WITH BASEFRAME HEIGHT
- ENDS ADD APPROXIMATELY 1 INCH TO CASE HEIGHT
- A 2" MINIMUM AIR GAP IS REQUIRED BETWEEN THE REAR OF THE CASE AND A WALL
- SUCTION LINE (4' & 6') - 5/8", SUCTION LINE (8' & 12') - 7/8", LIQUID LINE (ALL LENGTHS) - 3/8"
- AVAILABLE SHELF SIZES: 10", 12", 14", 16" & 18"
- PRODUCT ON TOP SHELF SHOULD BE 3" BELOW DISCHARGE
- RECOMMENDED SHELF CONFIGURATION IN ROWS: 1-10", 1-12" & 1-16"

Multi-Deck Produce/Dairy/Deli/Meat/Seafood Merchandiser

O3.5UM - 4′, 6′, 8′ & 12′

Electrical Data

Model		Fans per Case	Standard Fans		High Efficiency Fans		Anti-Condensate Heaters		Defrost Heaters			
			120 Volts		120 Volts		120 Volts		208 Volts		240 Volts	
			Amps	Watts	Amps	Watts	Amps	Watts	Amps	Watts	Amps	Watts
O3.5UM	4′	2	1.00	60	0.39	23.4	0.14[1]	17	1.92	400	2.22	532
	6′	2	1.00	60	0.39	23.4	0.20[1]	24	2.88	600	3.33	798
	8′	3	1.50	90	0.59	35.1	0.25[1]	30	3.85	800	4.44	1065
	12′	4	2.00	120	0.78	46.8	0.38[1]	46	5.77	1200	6.67	1600

[1] Anti-condensate heater data for unlighted rear sill. For lighted rear sill, double the values.

Lighting Data

Model		Bulbs per Row	Bulb Length	Typical per Light Row		Maximum Lighting	
				120 Volts		120 Volts	
				Amps	Watts	Amps	Watts
O3.5UM	4′	1	4′	0.23	28	1.67	140
	6′	2	3′	0.37	44	1.83	220
	8′	2	4′	0.47	56	2.33	280
	12′	3	4′	0.70	84	3.50	420

Guidelines & Control Settings

Model[2]	BTUH/ft[3]	Coil Type	Evaporator (°F)	Superheat Set Point @ Bulb (°F)	Discharge Air (°F)	Return Air (°F)	Discharge Air Velocity[5] (FPM)
O3.5UM	1300[4]	Enh.	22	6-8	30	45	300

[2] Model O3.5UM only available for meat application with a thermopane glass front or a curved plexiglas front.

[3] BTUHs/ft listed are for parallel operation. Conventional ratings may be approximated by multiplying listed rating by 1.04.

[4] High efficiency fans reduce refrigeration load by 96 BTUHs/fan.

[5] Average discharge air velocity at peak of defrost.

Defrost Controls

Model	Defrosts Per Day	Run-Off Time (min)	Electric Defrost		Timed Off Defrost		Hot Gas Defrost		Reverse Air Defrost	
			Fail-safe (min)	Termination Temp. (°F)	Fail-safe (min)	Termination Temp. (°F)	Fail-safe (min)	Termination Temp. (°F)	Fail-safe (min)	Termination Temp. (°F)
O3.5UM	3	6 - 8	40	47	45	45	26	45	45	45

Medium Temperature Defrost Schedule

No. Per Day	Hours
1	12 midnight
2	12 am - 12 pm
3	6 am - 2 pm - 10 pm
4	12 - 6 am - 12 - 6 pm

All measurements are taken per ARI 1200 - 2002 specifications.

NSF COMPONENT

c UL us

Hill PHOENIX EXCELLENCE

A DOVER COMPANY

O3.5UM
(11" BASEFRAME)

(for additional rear sill options refer to the Merchandisers Accessories Guide)

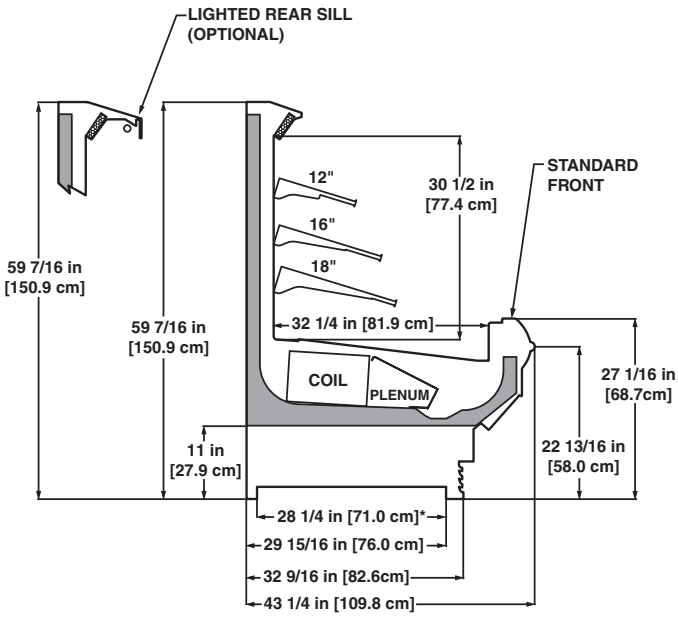

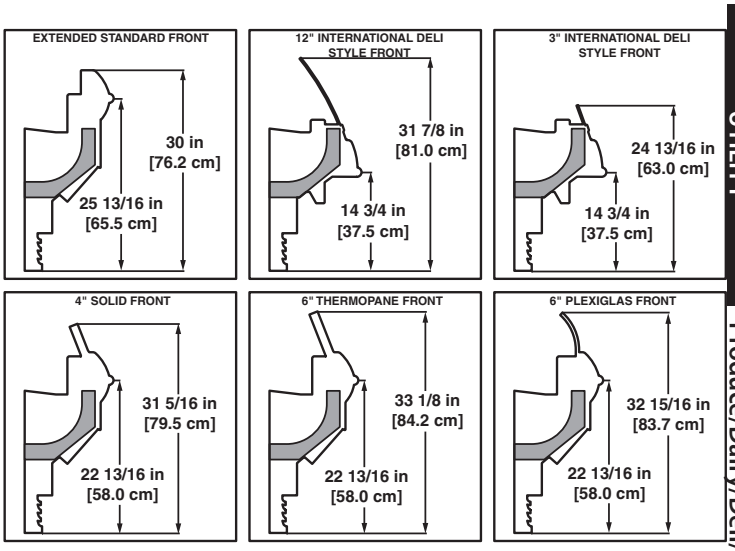

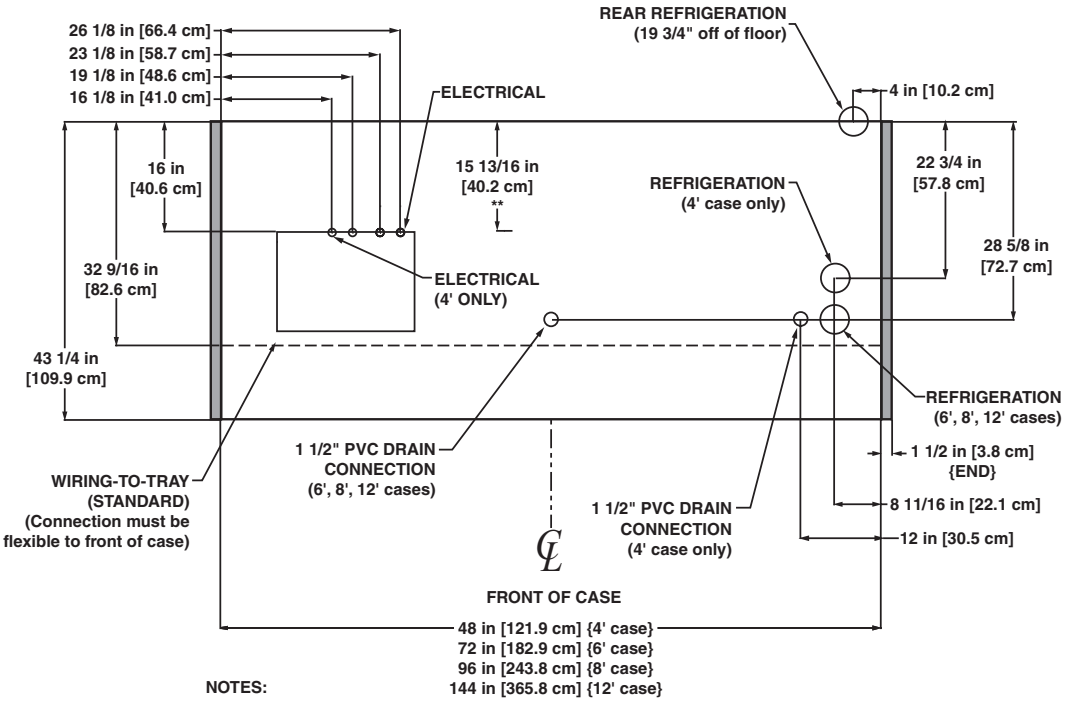

NOTES:

* STUB-UP AREA
** RECOMMENDED STUB-UP CENTERLINE FOR ELECTRICAL AND HUB DRAINS

- FRONT AND REAR SILL HEIGHTS VARY WITH BASEFRAME HEIGHT
- ENDS ADD APPROXIMATELY 1 INCH TO CASE HEIGHT
- A 2" MINIMUM AIR GAP IS REQUIRED BETWEEN THE REAR OF THE CASE AND A WALL
- SUCTION LINE (4' & 6') - 5/8", SUCTION LINE (8' & 12') - 7/8", LIQUID LINE (ALL LENGTHS) - 3/8"
- AVAILABLE SHELF SIZES: 10", 12", 14", 16" & 18"
- PRODUCT ON TOP SHELF SHOULD BE 3" BELOW DISCHARGE
- RECOMMENDED SHELF CONFIGURATION IN ROWS: 1-12", 1-16" & 1-18"

NSF COMPONENT

A DOVER COMPANY

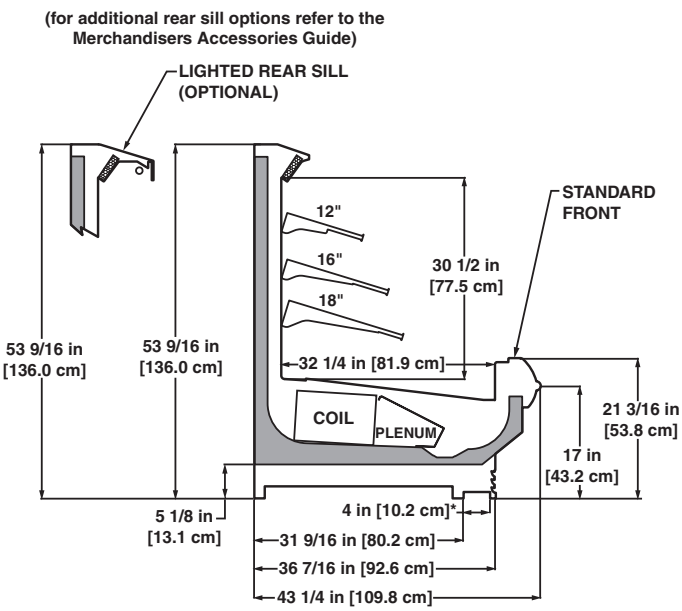

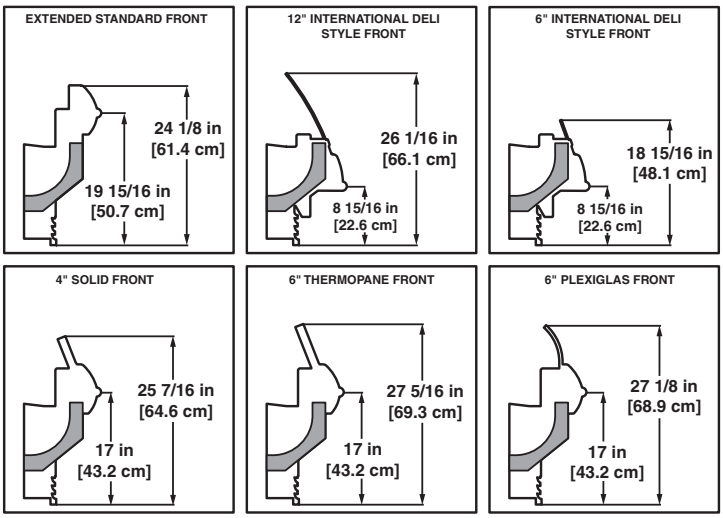

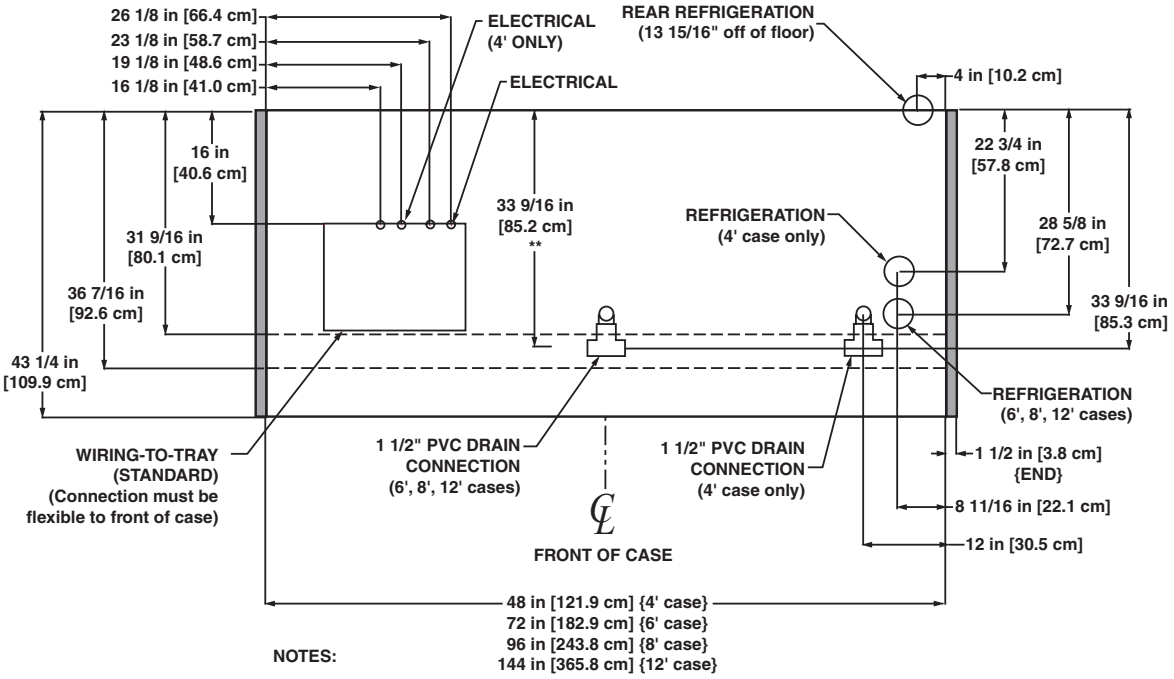

NOTES:

* STUB-UP AREA
** RECOMMENDED STUB-UP CENTERLINE FOR ELECTRICAL AND HUB DRAINS

- FRONT AND REAR SILL HEIGHTS VARY WITH BASEFRAME HEIGHT
- ENDS ADD APPROXIMATELY 1 INCH TO CASE HEIGHT
- A 2" MINIMUM AIR GAP IS REQUIRED BETWEEN THE REAR OF THE CASE AND A WALL
- SUCTION LINE (4' & 6') - 5/8", SUCTION LINE (8' & 12') - 7/8", LIQUID LINE (ALL LENGTHS) - 3/8"
- AVAILABLE SHELF SIZES: 10", 12", 14", 16" & 18"
- PRODUCT ON TOP SHELF SHOULD BE 3" BELOW DISCHARGE
- RECOMMENDED SHELF CONFIGURATION IN ROWS: 1-12", 1-16" & 1-18"

NSF COMPONENT c UL us

A DOVER COMPANY

Multi-Deck Produce/Dairy/Deli Merchandiser

O3.5UD - 4′, 6′, 8′ & 12′

Electrical Data

Model		Fans per Case	Standard Fans		High Efficiency Fans		Anti-Condensate Heaters		Defrost Heaters			
			120 Volts		120 Volts		120 Volts		208 Volts		240 Volts	
			Amps	Watts	Amps	Watts	Amps	Watts	Amps	Watts	Amps	Watts
O3.5UD	4′	2	1.00	60	0.15	9.2	0.14	17	1.92	400	2.22	532
	6′	2	1.00	60	0.15	9.2	0.20	24	2.88	600	3.33	798
	8′	3	1.50	90	0.23	13.8	0.25	30	3.85	800	4.44	1065
	12′	4	2.00	120	0.31	18.4	0.38	46	5.77	1200	6.67	1600

Lighting Data

Model		Bulbs per Row	Bulb Length	Typical per Light Row		Maximum Lighting	
				120 Volts		120 Volts	
				Amps	Watts	Amps	Watts
O3.5UD	4′	1	4′	0.23	28	0.93	112
	6′	2	3′	0.37	44	1.47	176
	8′	2	4′	0.47	56	1.87	224
	12′	3	4′	0.70	84	2.80	336

Guidelines & Control Settings

Model	Front Sill Heights	BTUH/ft[1]	Coil[2] Type	Evaporator (°F)	Superheat Set Point @ Bulb (°F)	Discharge Air (°F)	Return Air (°F)	Discharge Air Velocity[3] (FPM)
O3.5UD	Std. Dairy	1300	Enh.	22	6-8	30	45	300

[1] BTUHs/ft listed are for parallel operation. Conventional ratings may be approximated by multiplying listed rating by 1.04.

[2] High efficiency fans reduce refrigeration load by 96 BTUHs/fan.

[3] Average discharge air velocity at peak of defrost.

Defrost Controls

Model	Defrosts Per Day	Run-Off Time (min)	Electric Defrost		Timed Off Defrost		Hot Gas Defrost		Reverse Air Defrost	
			Fail-safe (min)	Termination Temp. (°F)	Fail-safe (min)	Termination Temp. (°F)	Fail-safe (min)	Termination Temp. (°F)	Fail-safe (min)	Termination Temp. (°F)
O3.5UD	3	6 - 8	40	47	45	45	26	45	45	45

Medium Temperature Defrost Schedule

No. Per Day	Hours
1	12 midnight
2	12 am - 12 pm
3	6 am - 2 pm - 10 pm
4	12 - 6 am - 12 - 6 pm

All measurements are taken per ARI 1200 - 2002 specifications.

6/07

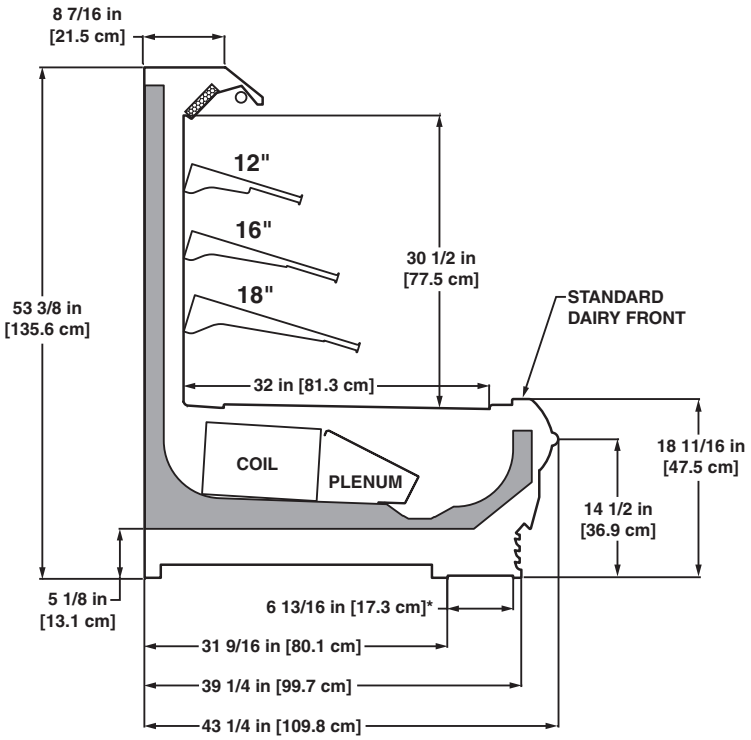

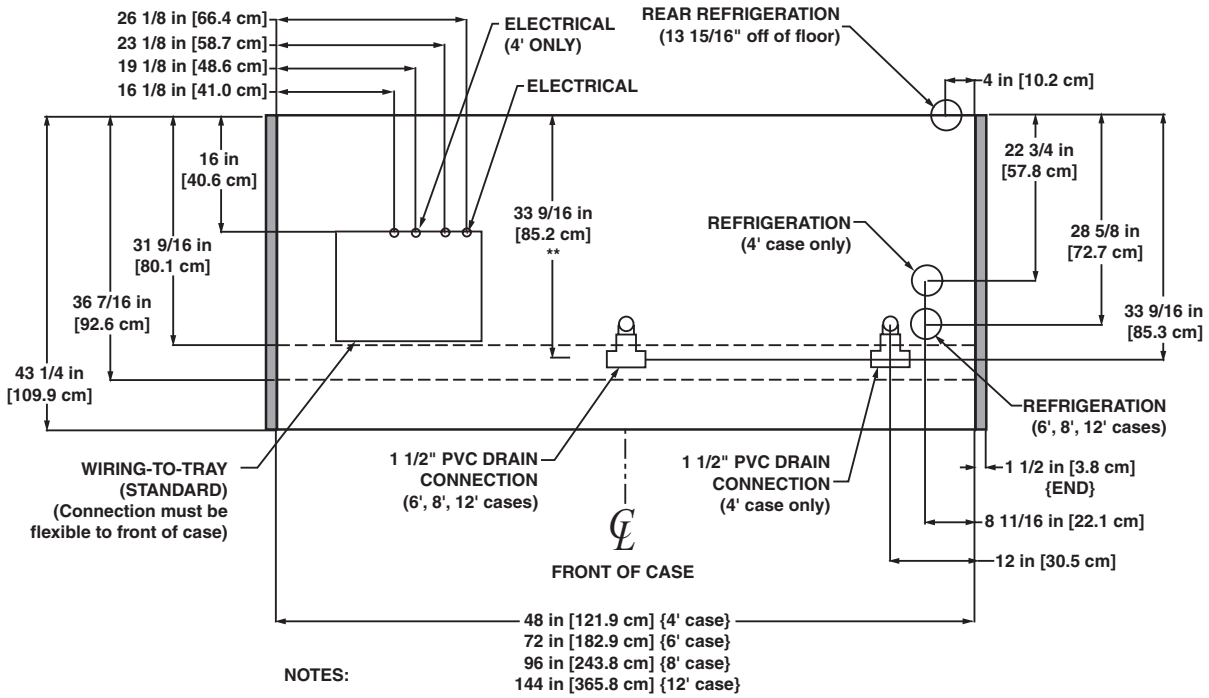

NOTES:

* STUB-UP AREA
** RECOMMENDED STUB-UP CENTERLINE FOR ELECTRICAL AND HUB DRAINS

- FRONT AND REAR SILL HEIGHTS VARY WITH BASEFRAME HEIGHT
- ENDS ADD APPROXIMATELY 1 INCH TO CASE HEIGHT
- A 2" MINIMUM AIR GAP IS REQUIRED BETWEEN THE REAR OF THE CASE AND A WALL
- SUCTION LINE (4' & 6') - 5/8", SUCTION LINE (8' & 12') - 7/8", LIQUID LINE (ALL LENGTHS) - 3/8"
- AVAILABLE SHELF SIZES: 10", 12", 14", 16" & 18"
- PRODUCT ON TOP SHELF SHOULD BE 3" BELOW DISCHARGE
- RECOMMENDED SHELF CONFIGURATION IN ROWS: 1-12", 1-16" & 1-18"

NSF COMPONENT c UL us

A DOVER COMPANY

Narrow Multi-Deck Produce/Dairy/Deli Merchandiser

ON4UM - 4′, 6′, 8′ & 12′

Electrical Data

Model		Fans per Case	Standard Fans		High Efficiency Fans		Anti-Condensate Heaters		Defrost Heaters			
			120 Volts		120 Volts		120 Volts		208 Volts		240 Volts	
			Amps	Watts	Amps	Watts	Amps	Watts	Amps	Watts	Amps	Watts
ON4UM	4′	2	1.00	60	0.15	9.2	0.14[1]	17	1.92	400	2.22	532
	6′	2	1.00	60	0.15	9.2	0.20[1]	24	2.88	600	3.33	798
	8′	3	1.50	90	0.23	13.8	0.25[1]	30	3.85	800	4.44	1065
	12′	4	2.00	120	0.31	18.4	0.38[1]	46	5.77	1200	6.67	1600

[1] Anti-condensate heater data for unlighted rear sill. For lighted rear sill, double the values.

Lighting Data

Model		Bulbs per Row	Bulb Length	Typical per Light Row		Maximum Lighting	
				120 Volts		120 Volts	
				Amps	Watts	Amps	Watts
ON4UM	4′	1	4′	0.23	28	1.67	140
	6′	2	3′	0.37	44	1.83	220
	8′	2	4′	0.47	56	2.33	280
	12′	3	4′	0.70	84	3.50	420

Guidelines & Control Settings

Model[2]	BTUH/ft[3]	Coil Type	Evaporator (°F)	Superheat Set Point @ Bulb (°F)	Discharge Air (°F)	Return Air (°F)	Discharge Air Velocity[5] (FPM)
ON4UM	1135[4]	Enh.	22	6-8	31	33	203

[2] Model ON4UM only available for deli application with a thermopane glass front or a curved plexiglas front.

[3] BTUHs/ft listed are for parallel operation. Conventional ratings may be approximated by multiplying listed rating by 1.04.

[4] High efficiency fans reduce refrigeration load by 96 BTUHs/fan.

[5] Average discharge air velocity at peak of defrost.

Defrost Controls

Model	Defrosts Per Day	Run-Off Time (min)	Electric Defrost		Timed Off Defrost		Hot Gas Defrost		Reverse Air Defrost	
			Fail-safe (min)	Termination Temp. (°F)	Fail-safe (min)	Termination Temp. (°F)	Fail-safe (min)	Termination Temp. (°F)	Fail-safe (min)	Termination Temp. (°F)
ON4UM	4	6 - 8	40	47	45	45	26	45	45	45

Medium Temperature Defrost Schedule

No. Per Day	Hours
1	12 midnight
2	12 am - 12 pm
3	6 am - 2 pm - 10 pm
4	12 - 6 am - 12 - 6 pm

All measurements are taken per ARI 1200 - 2002 specifications.

(for additional rear sill options refer to the Merchandisers Accessories Guide)

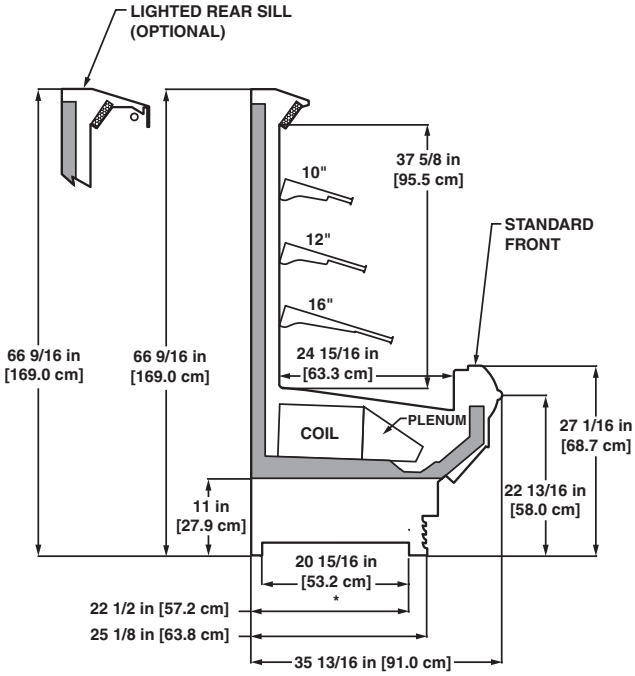

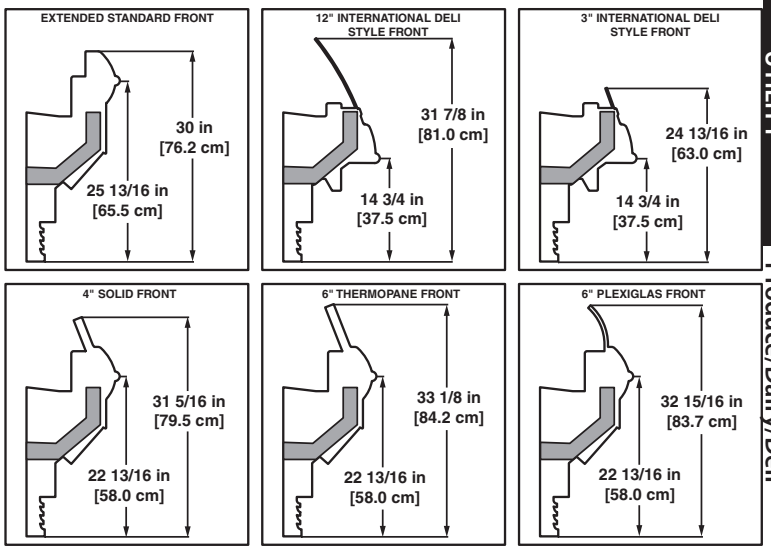

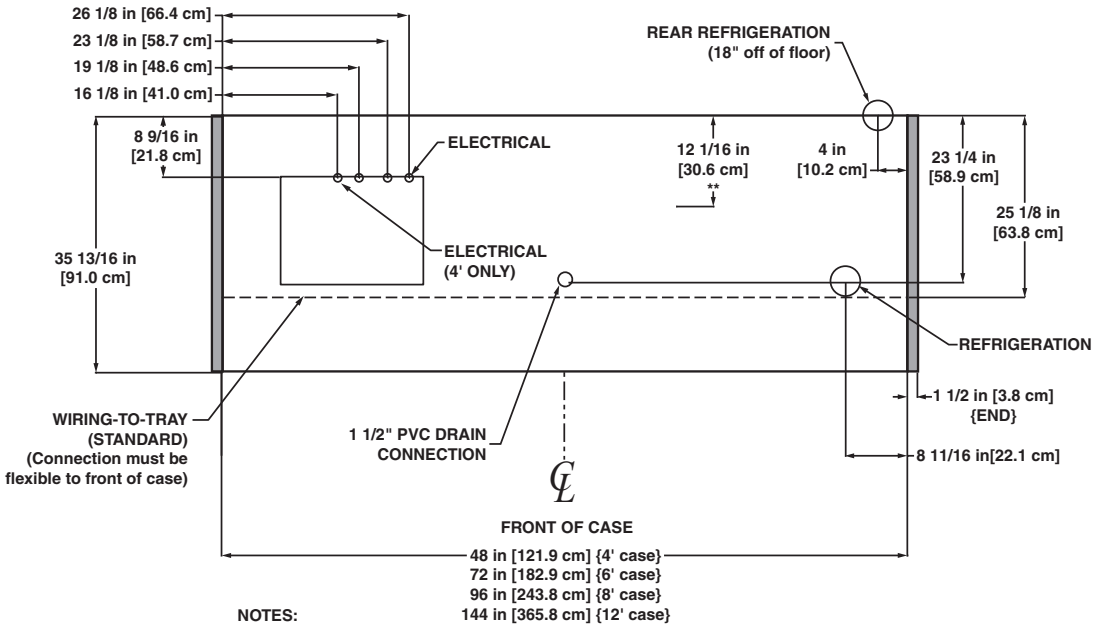

NOTES:

* STUB-UP AREA
** RECOMMENDED STUB-UP CENTERLINE FOR ELECTRICAL AND HUB DRAINS

- FRONT AND REAR SILL HEIGHTS VARY WITH BASEFRAME HEIGHT
- ENDS ADD APPROXIMATELY 1 INCH TO CASE HEIGHT
- A 2" MINIMUM AIR GAP IS REQUIRED BETWEEN THE REAR OF THE CASE AND A WALL
- SUCTION LINE (4' & 6') - 5/8", SUCTION LINE (8' & 12') - 7/8", LIQUID LINE (ALL LENGTHS) - 3/8"
- AVAILABLE SHELF SIZES: 10", 12", 14", 16" & 18"
- PRODUCT ON TOP SHELF SHOULD BE 3" BELOW DISCHARGE
- RECOMMENDED SHELF CONFIGURATION IN ROWS: 1-10", 1-12" & 1-16"

NSF COMPONENT c UL us

A DOVER COMPANY

(for additional rear sill options refer to the Merchandisers Accessories Guide)

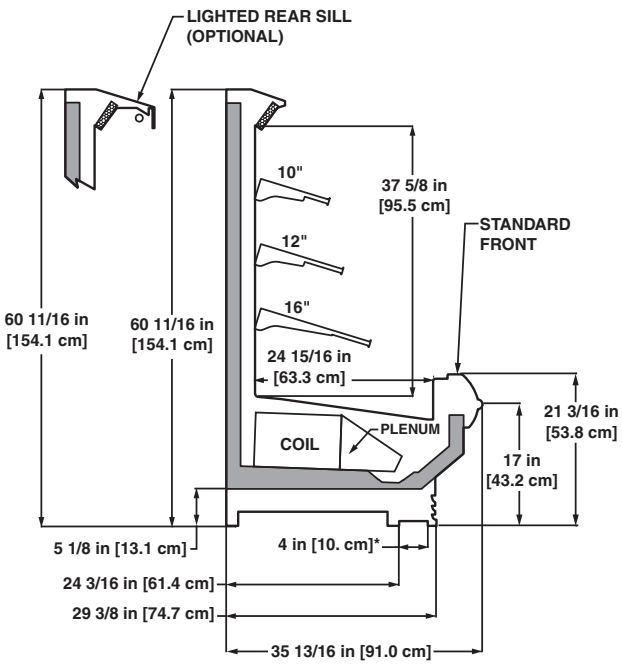

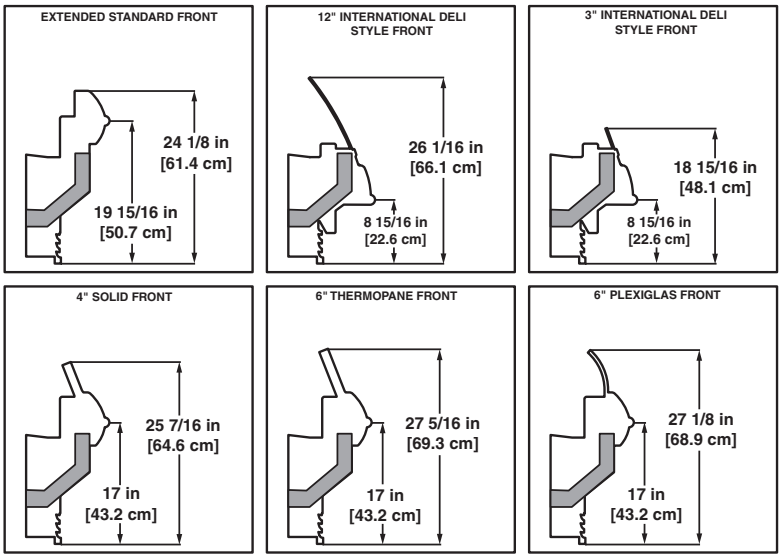

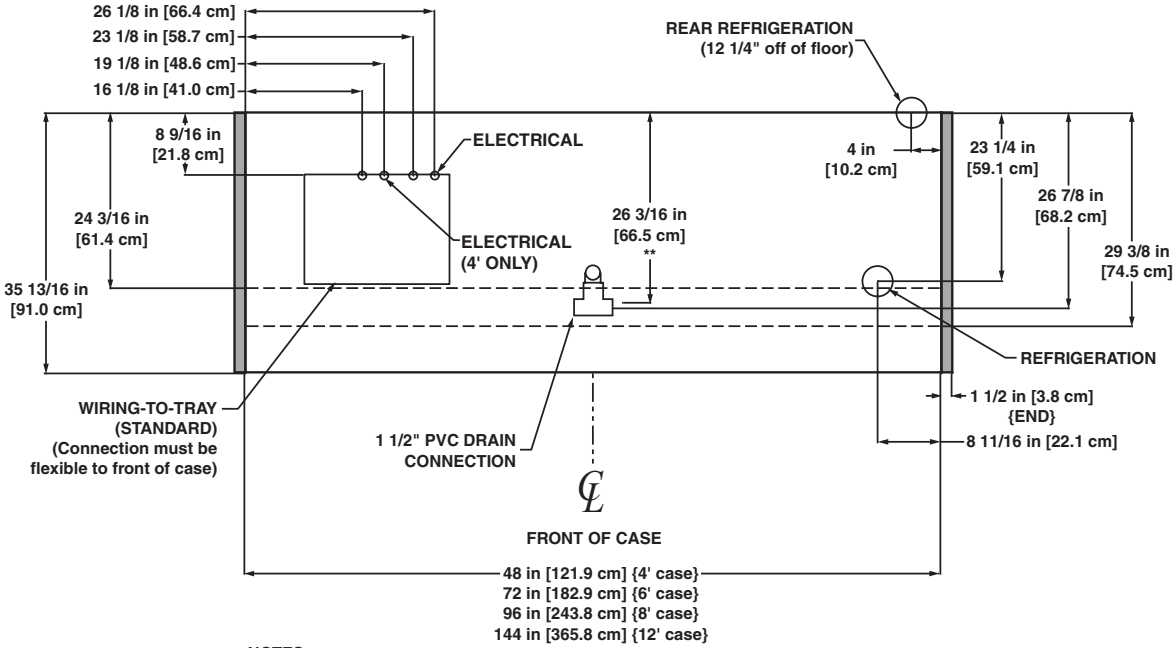

NOTES:

* STUB-UP AREA
** RECOMMENDED STUB-UP CENTERLINE FOR ELECTRICAL AND HUB DRAINS

- FRONT AND REAR SILL HEIGHTS VARY WITH BASEFRAME HEIGHT
- ENDS ADD APPROXIMATELY 1 INCH TO CASE HEIGHT
- A 2" MINIMUM AIR GAP IS REQUIRED BETWEEN THE REAR OF THE CASE AND A WALL
- SUCTION LINE (4' & 6') - 5/8", SUCTION LINE (8' & 12') - 7/8", LIQUID LINE (ALL LENGTHS) - 3/8"
- AVAILABLE SHELF SIZES: 10", 12", 14", 16" & 18"
- PRODUCT ON TOP SHELF SHOULD BE 3" BELOW DISCHARGE
- RECOMMENDED SHELF CONFIGURATION IN ROWS: 1-10", 1-12" & 1-16"

Multi-Deck Produce/Dairy/Deli Merchandiser

O4UM - 4′, 6′, 8′ & 12′

Electrical Data

Model		Fans per Case	Standard Fans 120 Volts Amps	Standard Fans 120 Volts Watts	High Efficiency Fans 120 Volts Amps	High Efficiency Fans 120 Volts Watts	Anti-Condensate Heaters 120 Volts Amps	Anti-Condensate Heaters 120 Volts Watts	Defrost Heaters 208 Volts Amps	Defrost Heaters 208 Volts Watts	Defrost Heaters 240 Volts Amps	Defrost Heaters 240 Volts Watts
O4UM	4′	2	1.00	60	0.39	23.4	0.14[1]	17	1.92	400	2.22	532
	6′	2	1.00	60	0.39	23.4	0.20[1]	24	2.88	600	3.33	798
	8′	3	1.50	90	0.59	35.1	0.25[1]	30	3.85	800	4.44	1065
	12′	4	2.00	120	0.78	46.8	0.38[1]	46	5.77	1200	6.67	1600

[1] Anti-condensate heater data for unlighted rear sill. For lighted rear sill, double the values.

Lighting Data

Model		Bulbs per Row	Bulb Length	Typical per Light Row 120 Volts Amps	Typical per Light Row 120 Volts Watts	Maximum Lighting 120 Volts Amps	Maximum Lighting 120 Volts Watts
O4UM	4′	1	4′	0.23	28	1.67	140
	6′	2	3′	0.37	44	1.83	220
	8′	2	4′	0.47	56	2.33	280
	12′	3	4′	0.70	84	3.50	420

Guidelines & Control Settings

Model[2]	BTUH/ft[3]	Coil Type	Evaporator (°F)	Superheat Set Point @ Bulb (°F)	Discharge Air (°F)	Return Air (°F)	Discharge Air Velocity[5] (FPM)
O4UM	1460[4]	Enh.	22	6-8	30	43	300

[2] Model O4UM only available for deli application with a thermopane glass front or a curved plexiglas front.

[3] BTUHs/ft listed are for parallel operation. Conventional ratings may be approximated by multiplying listed rating by 1.04.

[4] High efficiency fans reduce refrigeration load by 96 BTUHs/fan.

[5] Average discharge air velocity at peak of defrost.

Defrost Controls

Model	Defrosts Per Day	Run-Off Time (min)	Electric Defrost Fail-safe (min)	Electric Defrost Termination Temp. (°F)	Timed Off Defrost Fail-safe (min)	Timed Off Defrost Termination Temp. (°F)	Hot Gas Defrost Fail-safe (min)	Hot Gas Defrost Termination Temp. (°F)	Reverse Air Defrost Fail-safe (min)	Reverse Air Defrost Termination Temp. (°F)
O4UM	4	6 - 8	40	47	45	45	26	45	45	45

Medium Temperature Defrost Schedule

No. Per Day	Hours
1	12 midnight
2	12 am - 12 pm
3	6 am - 2 pm - 10 pm
4	12 - 6 am - 12 - 6 pm

All measurements are taken per ARI 1200 - 2002 specifications.

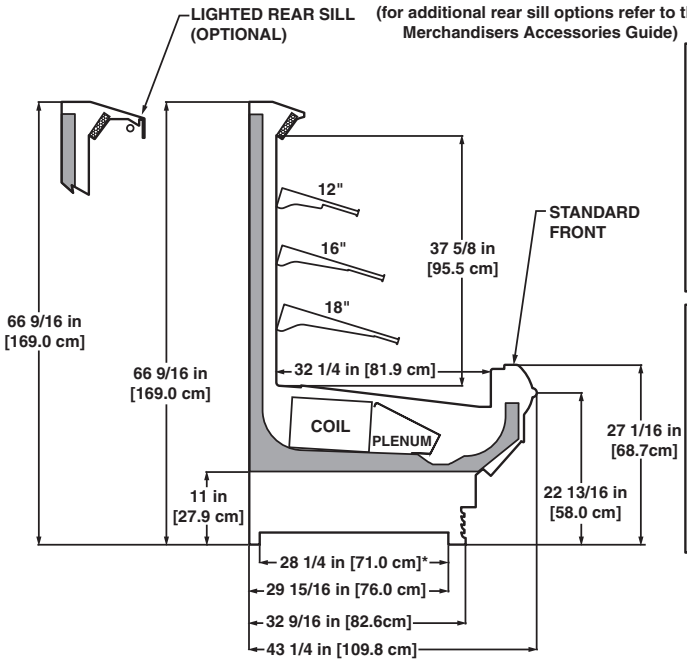

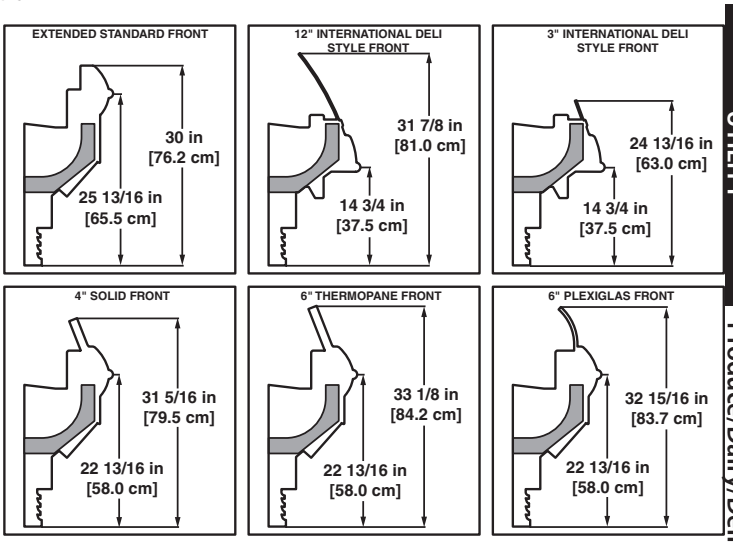

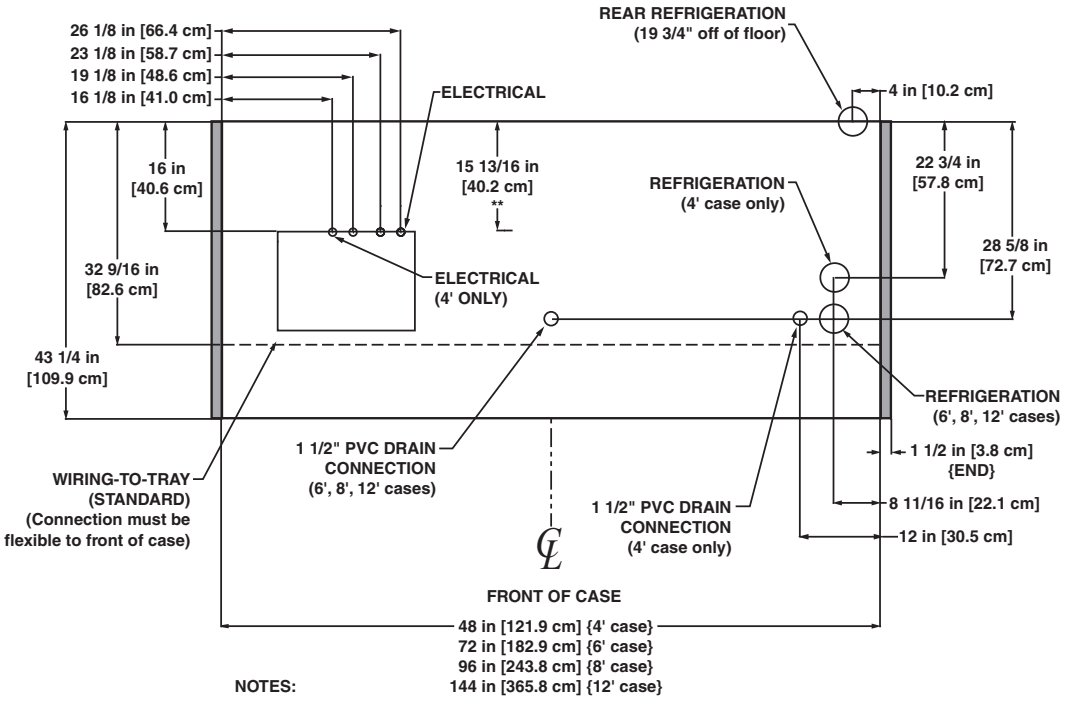

NOTES:

* STUB-UP AREA
** RECOMMENDED STUB-UP CENTERLINE FOR ELECTRICAL AND HUB DRAINS

- FRONT AND REAR SILL HEIGHTS VARY WITH BASEFRAME HEIGHT
- ENDS ADD APPROXIMATELY 1 INCH TO CASE HEIGHT
- A 2" MINIMUM AIR GAP IS REQUIRED BETWEEN THE REAR OF THE CASE AND A WALL
- SUCTION LINE (4' & 6') - 5/8", SUCTION LINE (8' & 12') - 7/8", LIQUID LINE (ALL LENGTHS) - 3/8"
- AVAILABLE SHELF SIZES: 10", 12", 14", 16" & 18"
- PRODUCT ON TOP SHELF SHOULD BE 3" BELOW DISCHARGE
- RECOMMENDED SHELF CONFIGURATION IN ROWS: 1-12", 1-16" & 1-18"

(for additional rear sill options refer to the Merchandisers Accessories Guide)

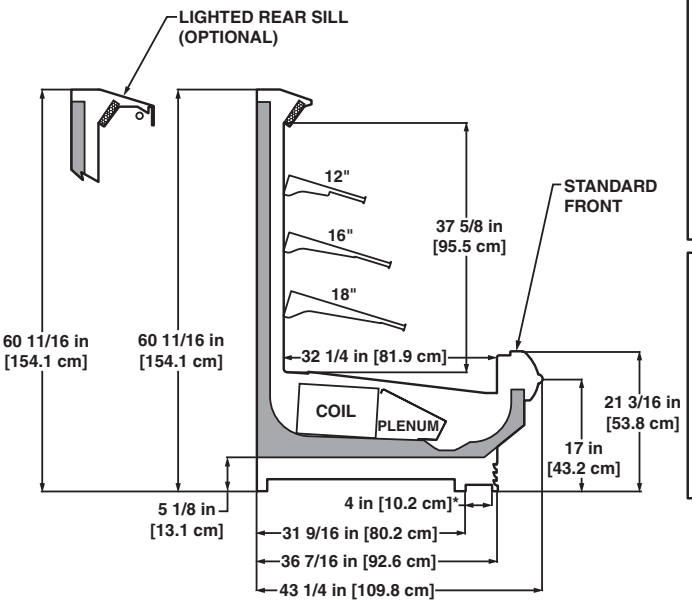

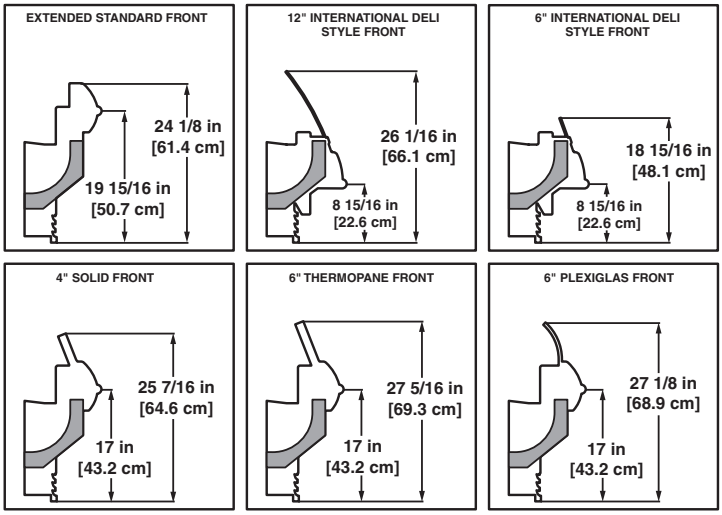

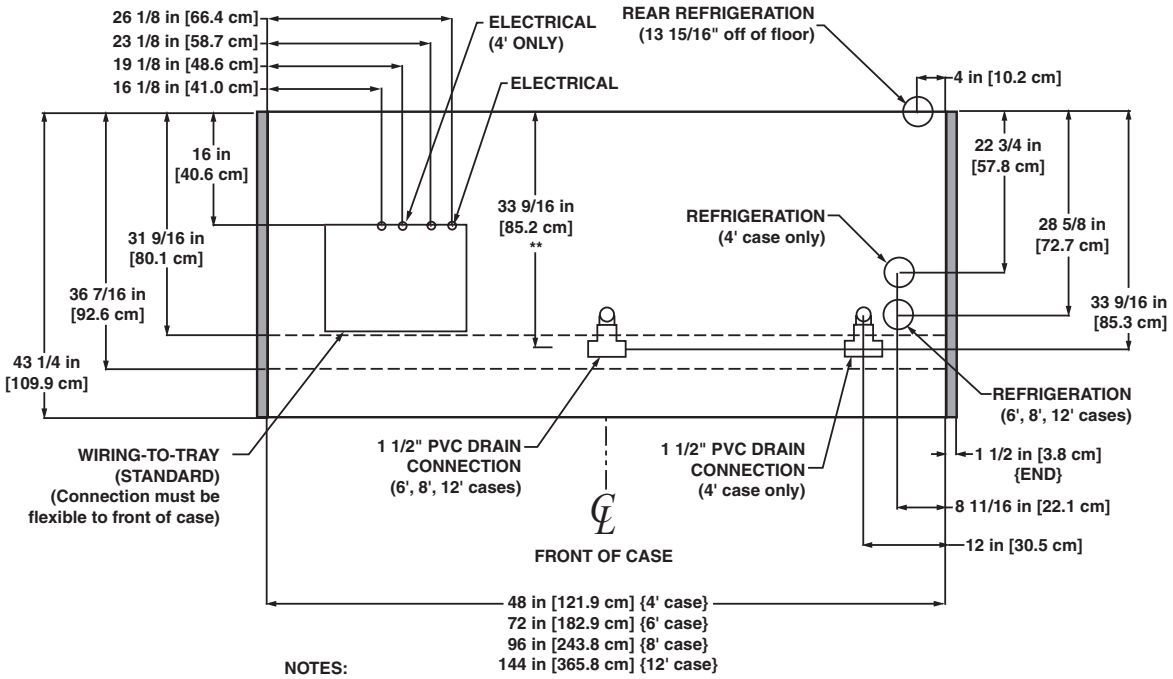

NOTES:

* STUB-UP AREA
** RECOMMENDED STUB-UP CENTERLINE FOR ELECTRICAL AND HUB DRAINS

- FRONT AND REAR SILL HEIGHTS VARY WITH BASEFRAME HEIGHT
- ENDS ADD APPROXIMATELY 1 INCH TO CASE HEIGHT
- A 2" MINIMUM AIR GAP IS REQUIRED BETWEEN THE REAR OF THE CASE AND A WALL
- SUCTION LINE (4' & 6') - 5/8", SUCTION LINE (8' & 12') - 7/8", LIQUID LINE (ALL LENGTHS) - 3/8"
- AVAILABLE SHELF SIZES: 10", 12", 14", 16" & 18"
- PRODUCT ON TOP SHELF SHOULD BE 3" BELOW DISCHARGE
- RECOMMENDED SHELF CONFIGURATION IN ROWS: 1-12", 1-16" & 1-18"

Narrow Multi-Deck Produce/Dairy/Deli Merchandiser

ON5UM - 4′, 6′, 8′ & 12′

Electrical Data

Model		Fans per Case	Standard Fans 120 Volts Amps	Standard Fans 120 Volts Watts	High Efficiency Fans 120 Volts Amps	High Efficiency Fans 120 Volts Watts	Anti-Condensate Heaters 120 Volts Amps	Anti-Condensate Heaters 120 Volts Watts	Defrost Heaters 208 Volts Amps	Defrost Heaters 208 Volts Watts	Defrost Heaters 240 Volts Amps	Defrost Heaters 240 Volts Watts
ON5UM	4′	2	1.00	60	0.39	23.4	0.14[1]	17	1.92	400	2.22	532
	6′	2	1.00	60	0.39	23.4	0.20[1]	24	2.88	600	3.33	798
	8′	3	1.50	90	0.59	35.1	0.25[1]	30	3.85	800	4.44	1065
	12′	4	2.00	120	0.78	46.8	0.38[1]	46	5.77	1200	6.67	1600

[1] Anti-condensate heater data for unlighted rear sill. For lighted rear sill, double the values.

Lighting Data

Model		Bulbs per Row	Bulb Length	Typical per Light Row 120 Volts Amps	Typical per Light Row 120 Volts Watts	Maximum Lighting 120 Volts Amps	Maximum Lighting 120 Volts Watts
ON5UM	4′	1	4′	0.23	28	1.38	166
	6′	2	3′	0.37	44	2.20	264
	8′	2	4′	0.47	56	2.80	336
	12′	3	4′	0.70	84	4.20	504

Guidelines & Control Settings

Model[2]	BTUH/ft[3]	Coil Type	Evaporator (°F)	Superheat Set Point @ Bulb (°F)	Discharge Air (°F)	Return Air (°F)	Discharge Air Velocity[5] (FPM)
ON5UM	1205[4]	Enh.	22	6-8	31	43	240

[2] Model ON5UM only available for deli application with a thermopane glass front or a curved plexiglas front.

[3] BTUHs/ft listed are for parallel operation. Conventional ratings may be approximated by multiplying listed rating by 1.04.

[4] High efficiency fans reduce refrigeration load by 96 BTUHs/fan.

[5] Average discharge air velocity at peak of defrost.

Defrost Controls

Model	Defrosts Per Day	Run-Off Time (min)	Electric Defrost Fail-safe (min)	Electric Defrost Termination Temp. (°F)	Timed Off Defrost Fail-safe (min)	Timed Off Defrost Termination Temp. (°F)	Hot Gas Defrost Fail-safe (min)	Hot Gas Defrost Termination Temp. (°F)	Reverse Air Defrost Fail-safe (min)	Reverse Air Defrost Termination Temp. (°F)
ON5UM	4	6 - 8	40	47	45	47	26	45	45	45

Defrost Schedule

No. Per Day	Hours
1	12 midnight
2	12 am - 12 pm
3	6 am - 2 pm - 10 pm
4	12 - 6 am - 12 - 6 pm

All measurements are taken per ARI 1200 - 2002 specifications.

NSF COMPONENT

c UL us

Hill PHOENIX EXCELLENCE

A DOVER COMPANY

ON5UM
(11" BASEFRAME)

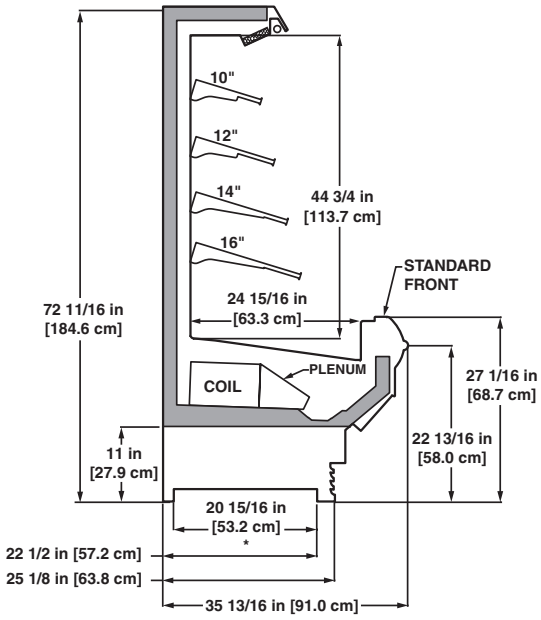

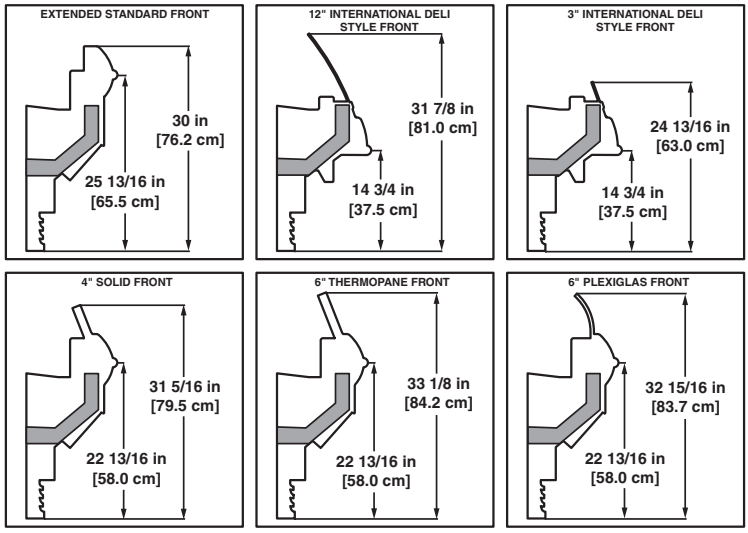

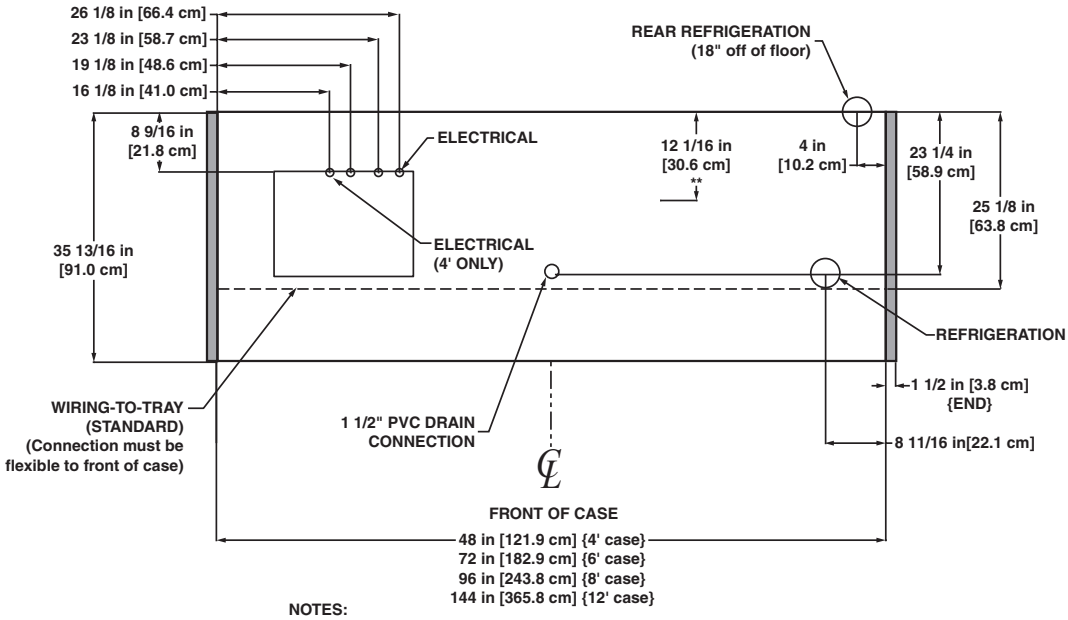

NOTES:

* STUB-UP AREA
** RECOMMENDED STUB-UP CENTERLINE FOR ELECTRICAL AND HUB DRAINS

- FRONT AND REAR SILL HEIGHTS VARY WITH BASEFRAME HEIGHT
- ENDS ADD APPROXIMATELY 1 INCH TO CASE HEIGHT
- A 2" MINIMUM AIR GAP IS REQUIRED BETWEEN THE REAR OF THE CASE AND A WALL
- SUCTION LINE - 5/8", LIQUID LINE - 3/8"
- AVAILABLE SHELF SIZES: 10", 12", 14" & 16"
- PRODUCT ON TOP SHELF SHOULD BE 3" BELOW DISCHARGE
- RECOMMENDED SHELF CONFIGURATION IN ROWS: 1-10", 1-12", 1-14" & 1-16"

ON5UM
(5" BASEFRAME)

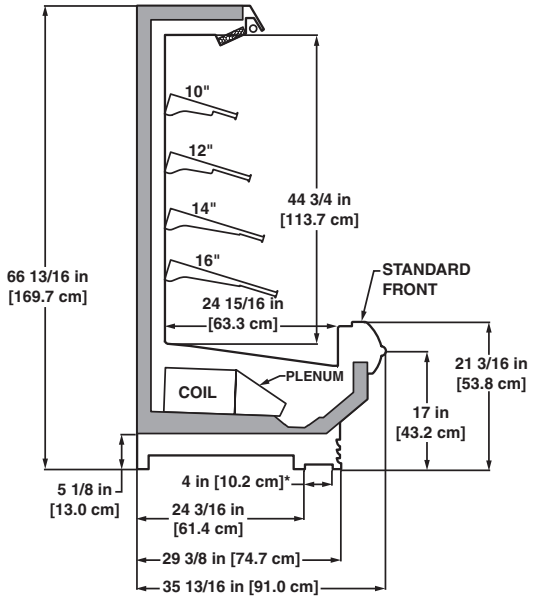

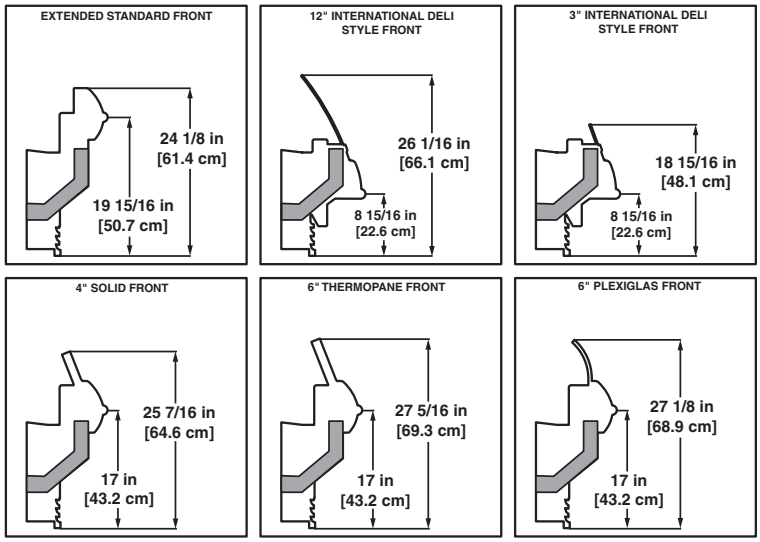

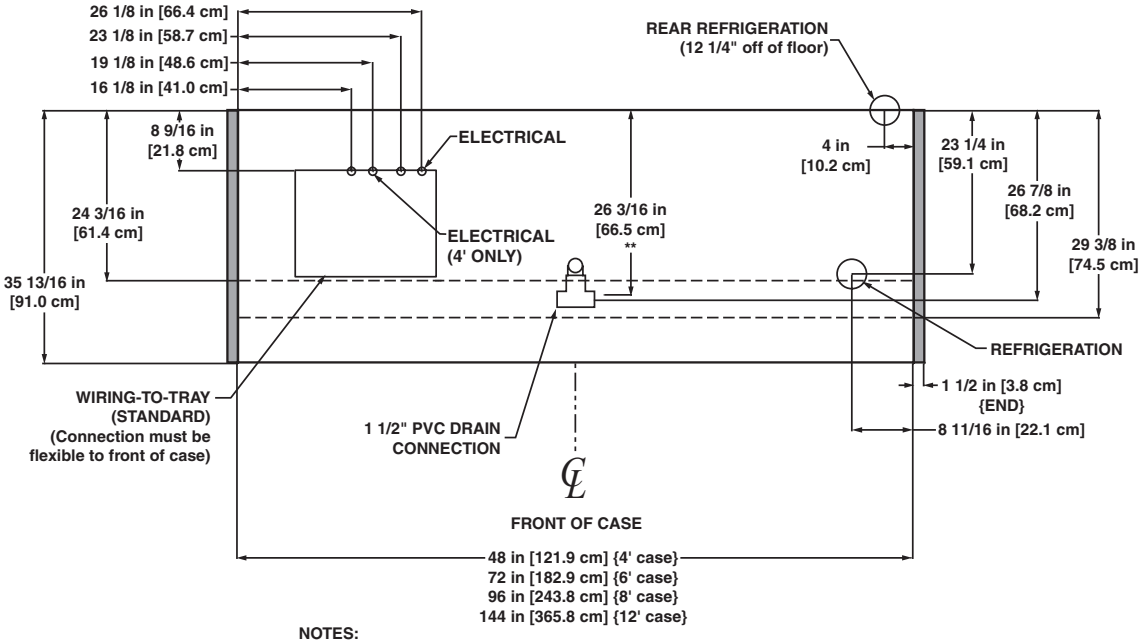

NOTES:

* STUB-UP AREA
** RECOMMENDED STUB-UP CENTERLINE FOR ELECTRICAL AND HUB DRAINS

- FRONT AND REAR SILL HEIGHTS VARY WITH BASEFRAME HEIGHT
- ENDS ADD APPROXIMATELY 1 INCH TO CASE HEIGHT
- A 2" MINIMUM AIR GAP IS REQUIRED BETWEEN THE REAR OF THE CASE AND A WALL
- SUCTION LINE - 5/8", LIQUID LINE - 3/8"
- AVAILABLE SHELF SIZES: 10", 12", 14" & 16"
- PRODUCT ON TOP SHELF SHOULD BE 3" BELOW DISCHARGE
- RECOMMENDED SHELF CONFIGURATION IN ROWS: 1-10", 1-12", 1-14" & 1-16"

NSF COMPONENT

A DOVER COMPANY

Multi-Deck Produce/Dairy/Deli Merchandiser

O5UM - 4′, 6′, 8′ & 12′

Electrical Data

Model		Fans per Case	Standard Fans 120 Volts Amps	Standard Fans 120 Volts Watts	High Efficiency Fans 120 Volts Amps	High Efficiency Fans 120 Volts Watts	Anti-Condensate Heaters 120 Volts Amps	Anti-Condensate Heaters 120 Volts Watts	Defrost Heaters 208 Volts Amps	Defrost Heaters 208 Volts Watts	Defrost Heaters 240 Volts Amps	Defrost Heaters 240 Volts Watts
O5UM	4′	2	1.00	60	0.39	23.4	0.14[1]	17	1.92	400	2.22	532
	6′	2	1.00	60	0.39	23.4	0.20[1]	24	2.88	600	3.33	798
	8′	3	1.50	90	0.59	35.1	0.25[1]	30	3.85	800	4.44	1065
	12′	4	2.00	120	0.78	46.8	0.38[1]	46	5.77	1200	6.67	1600

[1] Anti-condensate heater data for unlighted rear sill. For lighted rear sill, double the values.

Lighting Data

Model		Bulbs per Row	Bulb Length	Typical per Light Row 120 Volts Amps	Typical per Light Row 120 Volts Watts	Maximum Lighting 120 Volts Amps	Maximum Lighting 120 Volts Watts
O5UM	4′	1	4′	0.23	28	1.38	166
	6′	2	3′	0.37	44	2.20	264
	8′	2	4′	0.47	56	2.80	336
	12′	3	4′	0.70	84	4.20	504

Guidelines & Control Settings

Model[2]	BTUH/ft[3]	Coil Type	Evaporator (°F)	Superheat Set Point @ Bulb (°F)	Discharge Air (°F)	Return Air (°F)	Discharge Air Velocity[5] (FPM)
O5UM	1490[4]	Enh.	22	6-8	30	42	300

[2] Model O5UM only available for deli application with a thermopane glass front or a curved plexiglas front.

[3] BTUHs/ft listed are for parallel operation. Conventional ratings may be approximated by multiplying listed rating by 1.04.

[4] High efficiency fans reduce refrigeration load by 96 BTUHs/fan.

[5] Average discharge air velocity at peak of defrost.

Defrost Controls

Model	Defrosts Per Day	Run-Off Time (min)	Electric Defrost Fail-safe (min)	Electric Defrost Termination Temp. (°F)	Timed Off Defrost Fail-safe (min)	Timed Off Defrost Termination Temp. (°F)	Hot Gas Defrost Fail-safe (min)	Hot Gas Defrost Termination Temp. (°F)	Reverse Air Defrost Fail-safe (min)	Reverse Air Defrost Termination Temp. (°F)
O5UM	4	6 - 8	40	47	- - - [6]	- - -	26	45	45	45

[6] NOTE: - - - not an option on this case model.

Medium Temperature Defrost Schedule

No. Per Day	Hours
1	12 midnight
2	12 am - 12 pm
3	6 am - 2 pm - 10 pm
4	12 - 6 am - 12 - 6 pm

All measurements are taken per ARI 1200 - 2002 specifications.

NSF COMPONENT

c UL us

Hill PHOENIX EXCELLENCE

A DOVER COMPANY

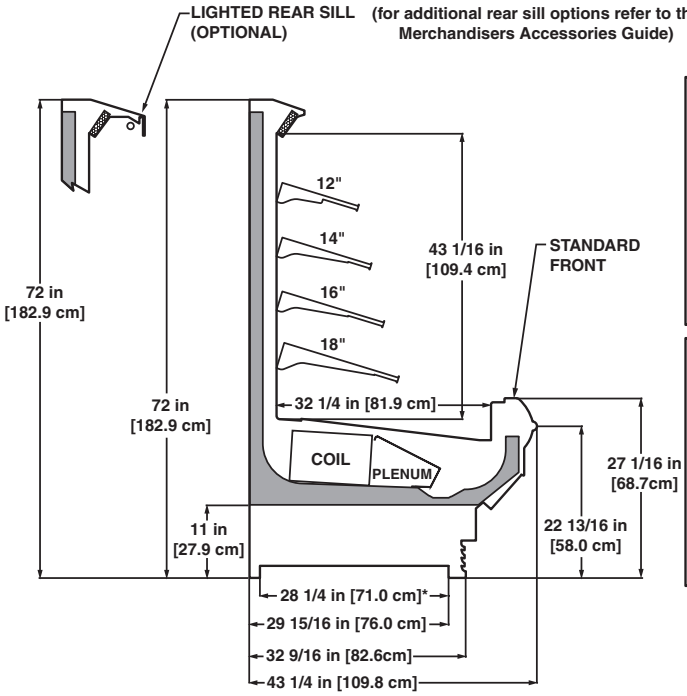

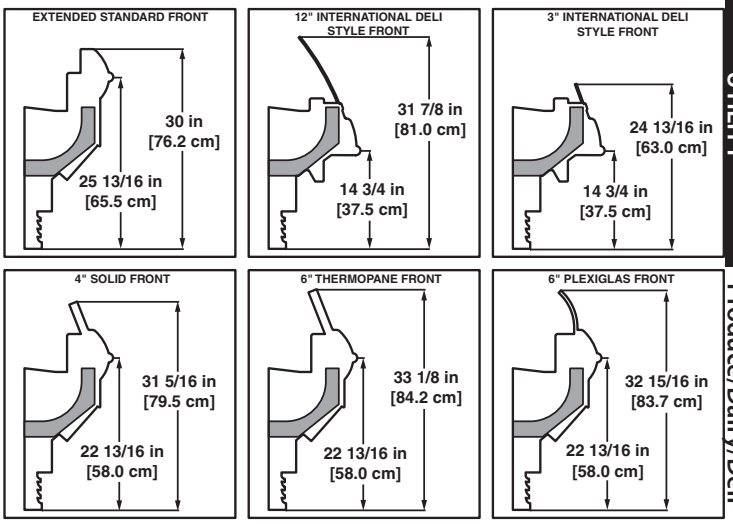

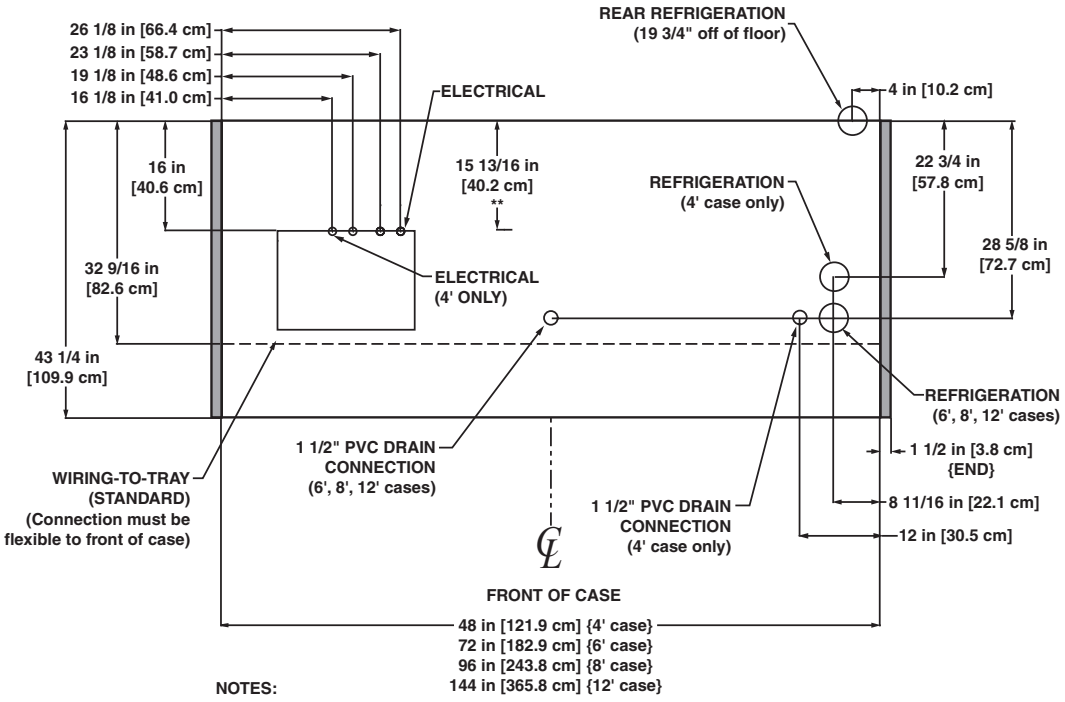

NOTES:

* STUB-UP AREA
** RECOMMENDED STUB-UP CENTERLINE FOR ELECTRICAL AND HUB DRAINS

- FRONT AND REAR SILL HEIGHTS VARY WITH BASEFRAME HEIGHT
- ENDS ADD APPROXIMATELY 1 INCH TO CASE HEIGHT
- A 2" MINIMUM AIR GAP IS REQUIRED BETWEEN THE REAR OF THE CASE AND A WALL
- SUCTION LINE (4' & 6') - 5/8", SUCTION LINE (8' & 12') - 7/8", LIQUID LINE (ALL LENGTHS) - 3/8"
- AVAILABLE SHELF SIZES: 10", 12", 14", 16" & 18"
- PRODUCT ON TOP SHELF SHOULD BE 3" BELOW DISCHARGE
- RECOMMENDED SHELF CONFIGURATION IN ROWS: 1-12", 1-14", 1-16" & 1-18"

NSF COMPONENT c UL us

A DOVER COMPANY

(for additional rear sill options refer to the Merchandisers Accessories Guide)

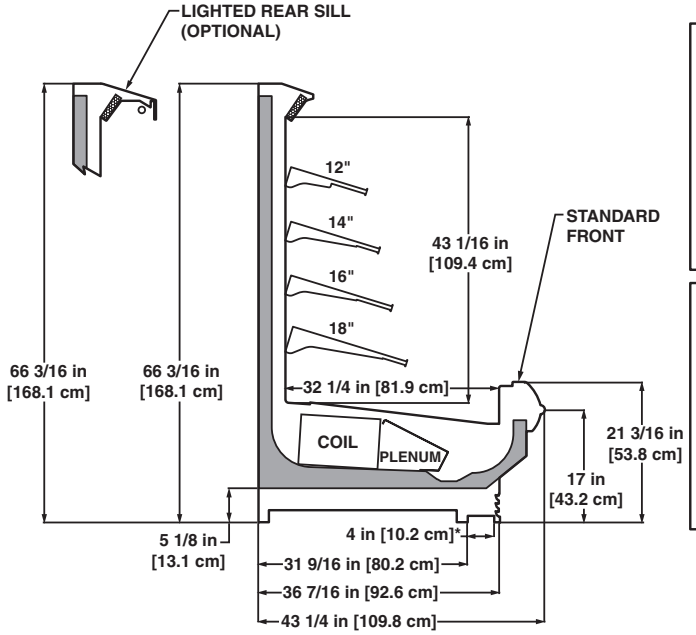

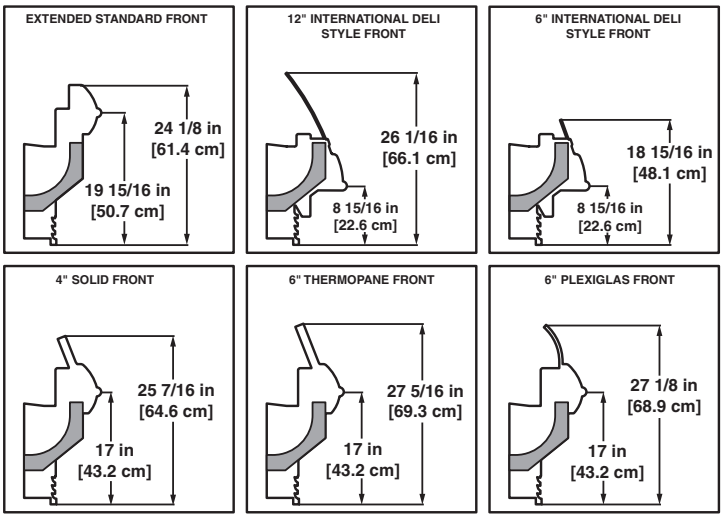

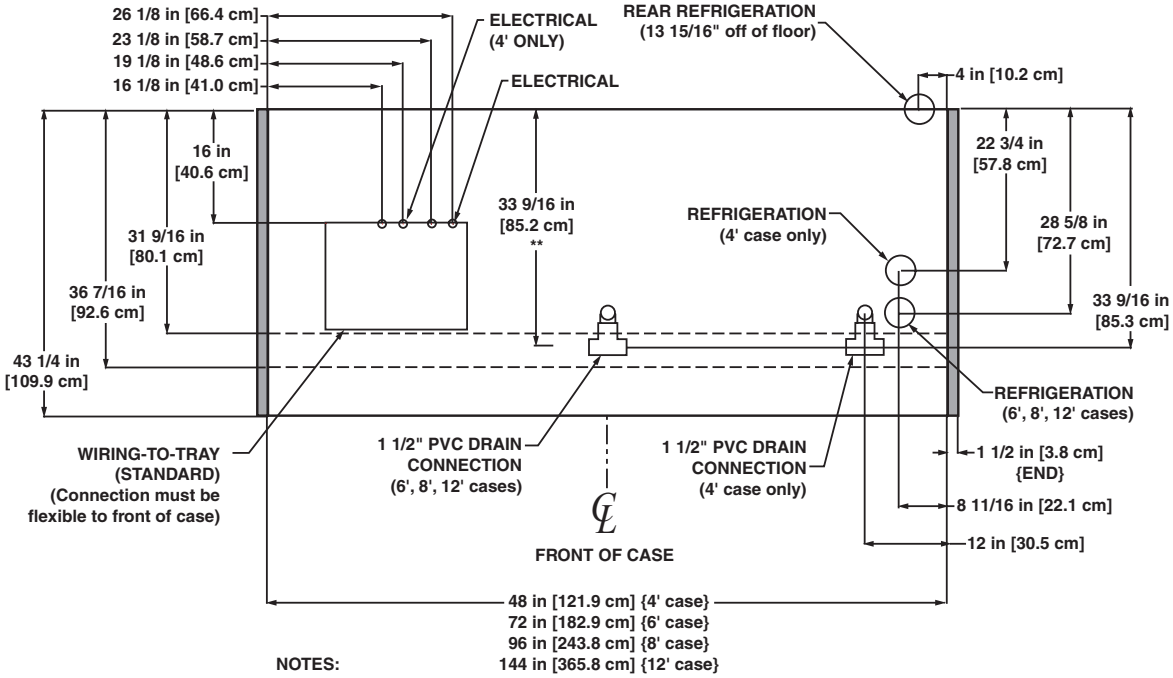

NOTES:

* STUB-UP AREA
** RECOMMENDED STUB-UP CENTERLINE FOR ELECTRICAL AND HUB DRAINS

- FRONT AND REAR SILL HEIGHTS VARY WITH BASEFRAME HEIGHT
- ENDS ADD APPROXIMATELY 1 INCH TO CASE HEIGHT
- A 2" MINIMUM AIR GAP IS REQUIRED BETWEEN THE REAR OF THE CASE AND A WALL
- SUCTION LINE (4' & 6') - 5/8", SUCTION LINE (8' & 12') - 7/8", LIQUID LINE (ALL LENGTHS) - 3/8"
- AVAILABLE SHELF SIZES: 10", 12", 14", 16" & 18"
- PRODUCT ON TOP SHELF SHOULD BE 3" BELOW DISCHARGE
- RECOMMENDED SHELF CONFIGURATION IN ROWS: 1-12", 1-14", 1-16" & 1-18"

NSF COMPONENT c UL us

A DOVER COMPANY

Narrow Multi-Deck Produce/Dairy/Deli Merchandiser

ON6UM - 8′ & 12′

Electrical Data

Model		Fans per Case	Standard Fans 120 Volts Amps	Standard Fans 120 Volts Watts	High Efficiency Fans 120 Volts Amps	High Efficiency Fans 120 Volts Watts	Anti-Condensate Heaters 120 Volts Amps	Anti-Condensate Heaters 120 Volts Watts	Defrost Heaters 208 Volts Amps	Defrost Heaters 208 Volts Watts	Defrost Heaters 240 Volts Amps	Defrost Heaters 240 Volts Watts
ON6UM	8′	3	1.50	90	0.70	42	0.25[1]	30	3.85	800	4.44	1065
	12′	4	2.00	120	0.93	56	0.38[1]	46	5.77	1200	6.67	1600

[1] Anti-condensate heater data for unlighted rear sill. For lighted rear sill, double the values.

Lighting Data

Model		Bulbs per Row	Bulb Length	Typical per Light Row 120 Volts Amps	Typical per Light Row 120 Volts Watts	Maximum Lighting 120 Volts Amps	Maximum Lighting 120 Volts Watts
ON6UM	8′	2	4′	0.47	56	3.27	392
	12′	3	4′	0.70	84	4.90	588

Guidelines & Control Settings

Model[2]	BTUH/ft[3]	Coil Type	Evaporator (°F)	Superheat Set Point @ Bulb (°F)	Discharge Air (°F)	Return Air (°F)	Discharge Air Velocity[5] (FPM)
ON6UM	1092[4]	Enh.	22	6-8	28	40	300

[2] Model ON6UM only available for deli application with a thermopane glass front or a curved plexiglas front.

[3] BTUHs/ft listed are for parallel operation. Conventional ratings may be approximated by multiplying listed rating by 1.04.

[4] High efficiency fans reduce refrigeration load by 96 BTUHs/fan.

[5] Average discharge air velocity at peak of defrost.

Defrost Controls

Model	Defrosts Per Day	Run-Off Time (min)	Electric Defrost Fail-safe (min)	Electric Defrost Termination Temp. (°F)	Timed Off Defrost Fail-safe (min)	Timed Off Defrost Termination Temp. (°F)	Hot Gas Defrost Fail-safe (min)	Hot Gas Defrost Termination Temp. (°F)	Reverse Air Defrost Fail-safe (min)	Reverse Air Defrost Termination Temp. (°F)
ON6UM	4	6 - 8	35	48	- - -[6]	- - -	26	45	- - -	- - -

[6] NOTE: - - - not an option on this case model.

Medium Temperature Defrost Schedule

No. Per Day	Hours
1	12 midnight
2	12 am - 12 pm
3	6 am - 2 pm - 10 pm
4	12 - 6 am - 12 - 6 pm

All measurements are taken per ARI 1200 - 2002 specifications.

NSF COMPONENT

c UL us

HILL PHOENIX EXCELLENCE

A DOVER COMPANY

ON6UM
(11" BASEFRAME)

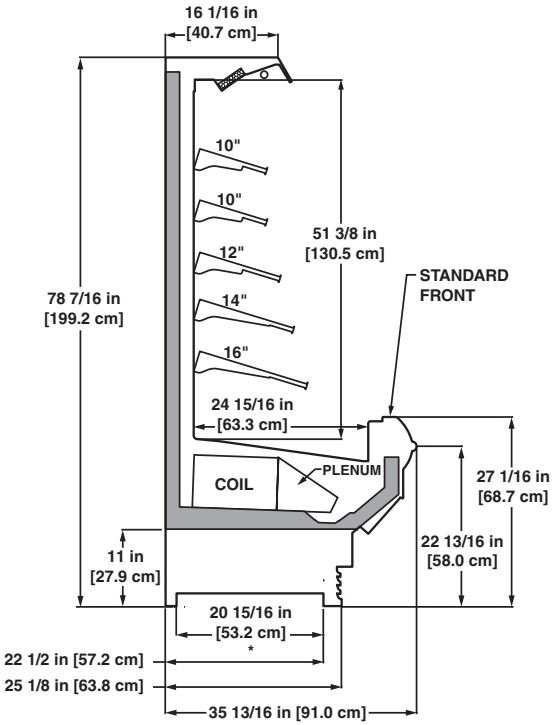

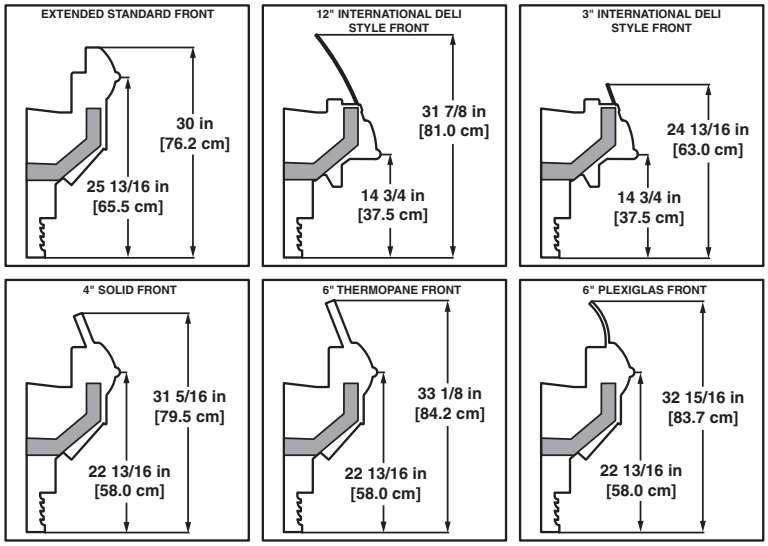

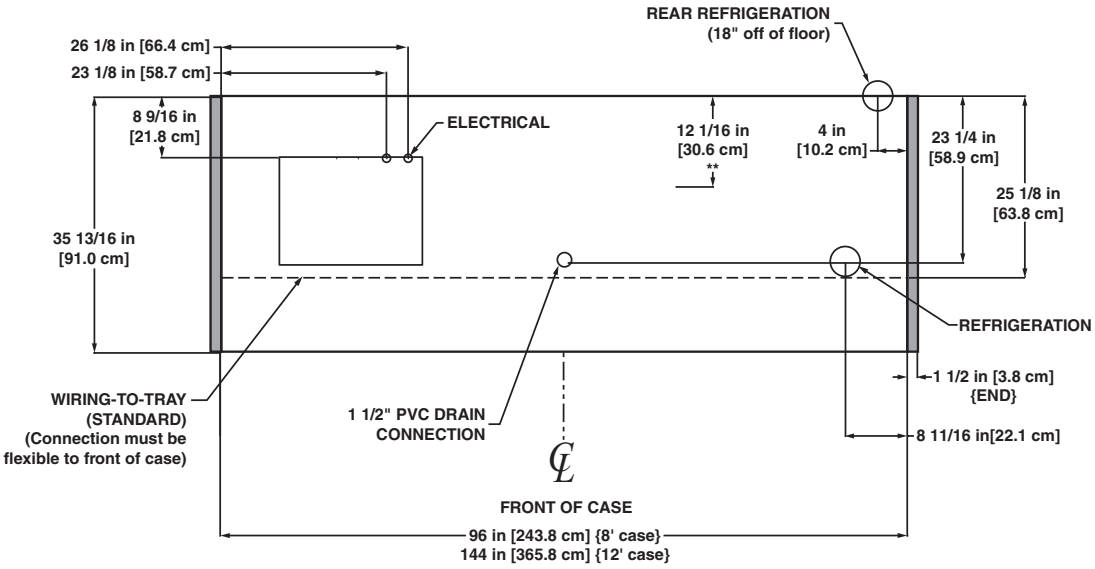

NOTES:

* STUB-UP AREA
** RECOMMENDED STUB-UP CENTERLINE FOR ELECTRICAL AND HUB DRAINS

- FRONT AND REAR SILL HEIGHTS VARY WITH BASEFRAME HEIGHT
- ENDS ADD APPROXIMATELY 1 INCH TO CASE HEIGHT
- A 2" MINIMUM AIR GAP IS REQUIRED BETWEEN THE REAR OF THE CASE AND A WALL
- SUCTION LINE - 7/8", LIQUID LINE - 3/8"
- AVAILABLE SHELF SIZES: 10", 12", 14" & 16"
- PRODUCT ON TOP SHELF SHOULD BE 3" BELOW DISCHARGE
- RECOMMENDED SHELF CONFIGURATION IN ROWS: 2-10", 1-12", 1-14" & 1-16"

ON6UM
(5" BASEFRAME)

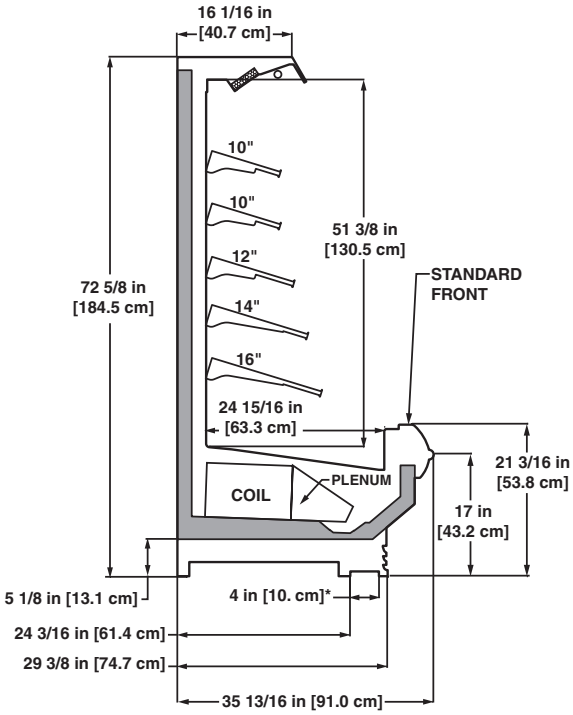

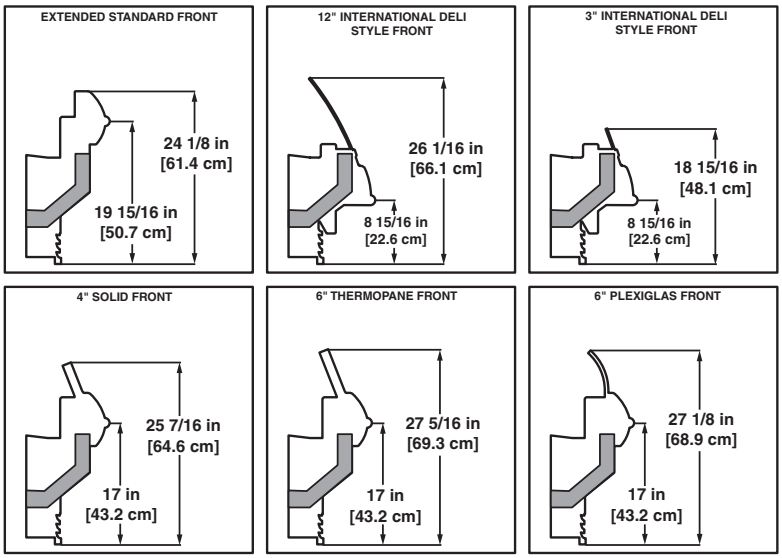

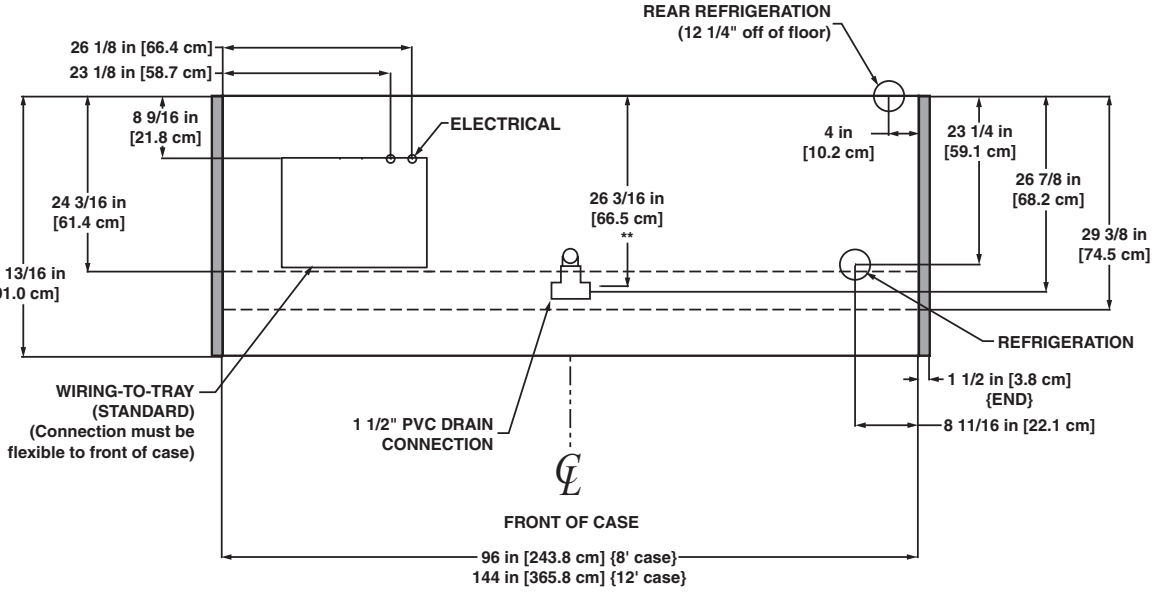

NOTES:

* STUB-UP AREA
** RECOMMENDED STUB-UP CENTERLINE FOR ELECTRICAL AND HUB DRAINS

- FRONT AND REAR SILL HEIGHTS VARY WITH BASEFRAME HEIGHT
- ENDS ADD APPROXIMATELY 1 INCH TO CASE HEIGHT
- A 2" MINIMUM AIR GAP IS REQUIRED BETWEEN THE REAR OF THE CASE AND A WALL
- SUCTION LINE - 7/8", LIQUID LINE - 1/2"
- AVAILABLE SHELF SIZES: 10", 12", 14" & 16"

NSF COMPONENT

A DOVER COMPANY

Multi-Deck Produce/Dairy/Deli Merchandiser

O6UM - 6′, 8′ & 12′

Electrical Data

Model		Fans per Case	Standard Fans 120 Volts Amps	Standard Fans 120 Volts Watts	High Efficiency Fans 120 Volts Amps	High Efficiency Fans 120 Volts Watts	Anti-Condensate Heaters 120 Volts Amps	Anti-Condensate Heaters 120 Volts Watts	Defrost Heaters 208 Volts Amps	Defrost Heaters 208 Volts Watts	Defrost Heaters 240 Volts Amps	Defrost Heaters 240 Volts Watts
O6UM	6′	2	1.00	60	0.31	18.4	0.20[1]	24	2.88	600	3.33	798
	8′	3	1.50	90	0.46	27.6	0.25[1]	30	3.85	800	4.44	1065
	12′	4	2.00	120	0.61	36.8	0.38[1]	46	5.77	1200	6.67	1600

[1] Anti-condensate heater data for unlighted rear sill. For lighted rear sill, double the values.

Lighting Data

Model		Bulbs per Row	Bulb Length	Typical per Light Row 120 Volts Amps	Typical per Light Row 120 Volts Watts	Maximum Lighting 120 Volts Amps	Maximum Lighting 120 Volts Watts
O6UM	6′	2	3′	0.37	44	2.57	308
	8′	2	4′	0.47	56	3.27	392
	12′	3	4′	0.70	84	4.90	588

Guidelines & Control Settings

Model[2]	BTUH/ft[3]	Coil Type	Evaporator (°F)	Superheat Set Point @ Bulb (°F)	Discharge Air (°F)	Return Air (°F)	Discharge Air Velocity[5] (FPM)
O6UM	1405[4]	Enh.	22	6-8	29	41	300

[2] Model O6UM only available for deli application with a thermopane glass front or a curved plexiglas front.

[3] BTUHs/ft listed are for parallel operation. Conventional ratings may be approximated by multiplying listed rating by 1.04.

[4] High efficiency fans reduce refrigeration load by 96 BTUHs/fan.

[5] Average discharge air velocity at peak of defrost.

Defrost Controls

Model	Defrosts Per Day	Run-Off Time (min)	Electric Defrost Fail-safe (min)	Electric Defrost Termination Temp. (°F)	Timed Off Defrost Fail-safe (min)	Timed Off Defrost Termination Temp. (°F)	Hot Gas Defrost Fail-safe (min)	Hot Gas Defrost Termination Temp. (°F)	Reverse Air Defrost Fail-safe (min)	Reverse Air Defrost Termination Temp. (°F)
O6UM	4	6 - 8	35	48	- - -[6]	- - -	26	45	- - -	- - -

[6] NOTE: - - - not an option on this case model.

Medium Temperature Defrost Schedule

No. Per Day	Hours
1	12 midnight
2	12 am - 12 pm
3	6 am - 2 pm - 10 pm
4	12 - 6 am - 12 - 6 pm

All measurements are taken per ARI 1200 - 2002 specifications.

NSF COMPONENT

c UL us

Hill PHOENIX EXCELLENCE

A DOVER COMPANY

O6UM
(11" BASEFRAME)

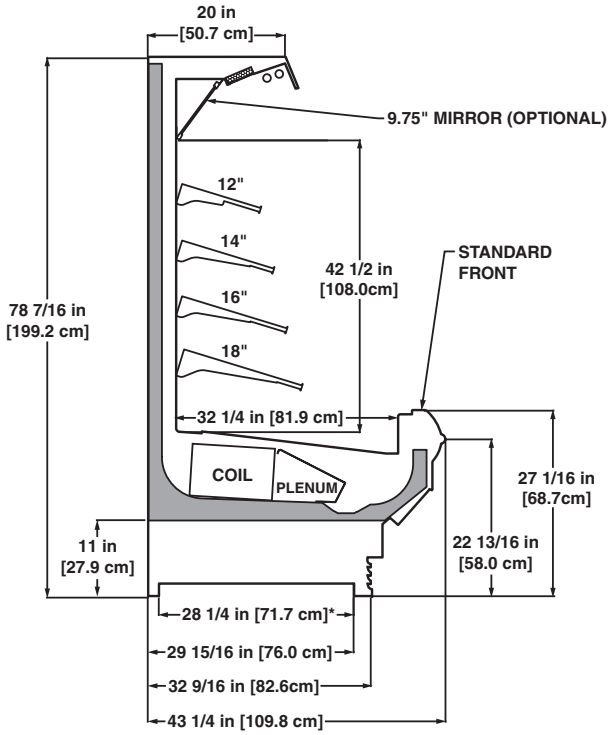

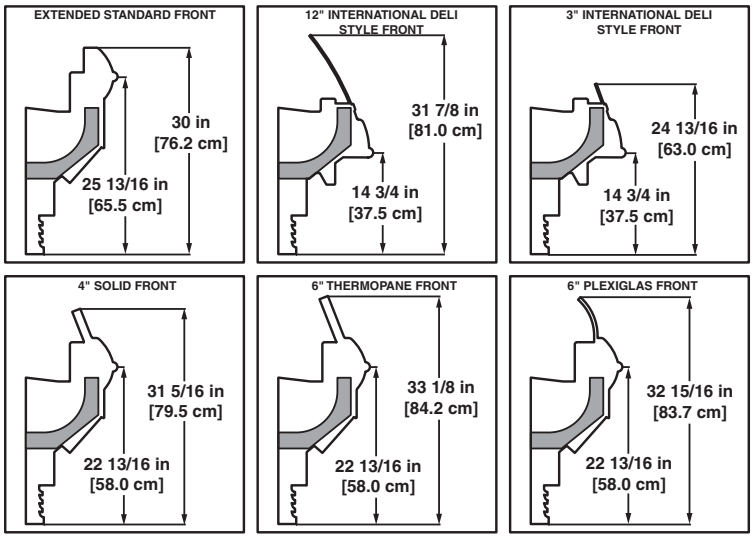

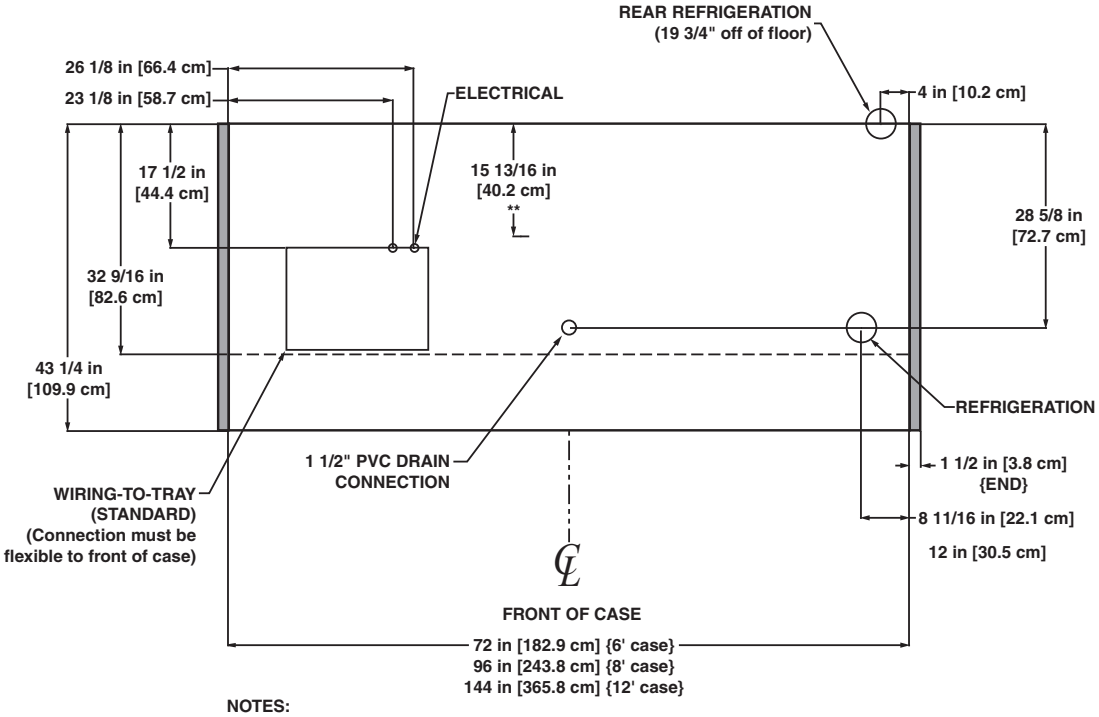

NOTES:

* STUB-UP AREA
** RECOMMENDED STUB-UP CENTERLINE FOR ELECTRICAL AND HUB DRAINS

- FRONT AND REAR SILL HEIGHTS VARY WITH BASEFRAME HEIGHT
- ENDS ADD APPROXIMATELY 1 INCH TO CASE HEIGHT
- A 2" MINIMUM AIR GAP IS REQUIRED BETWEEN THE REAR OF THE CASE AND A WALL
- SUCTION LINE (6') - 5/8", SUCTION LINE (8' & 12') - 7/8", LIQUID LINE (ALL LENGTHS) - 3/8"
- AVAILABLE SHELF SIZES: 10", 12", 14", 16" & 18"
- PRODUCT ON TOP SHELF SHOULD BE 3" BELOW DISCHARGE
- RECOMMENDED SHELF CONFIGURATION IN ROWS: 1-12", 1-14", 1-16" & 1-18"

NSF COMPONENT c UL us

A DOVER COMPANY

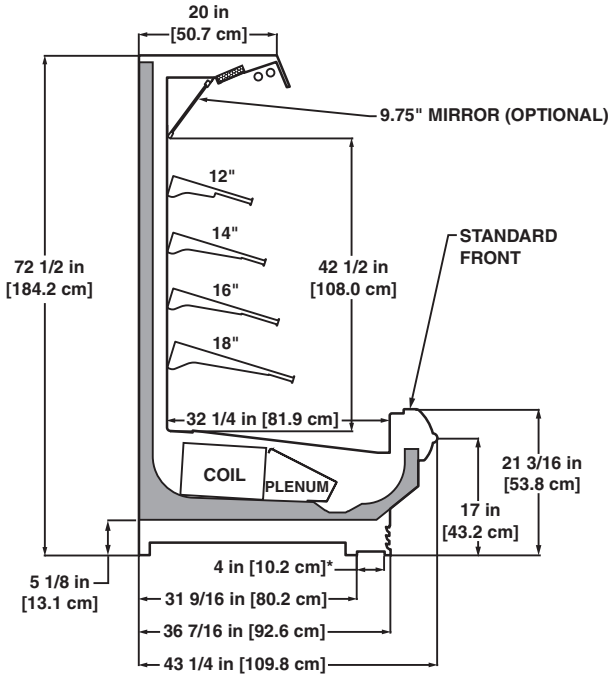

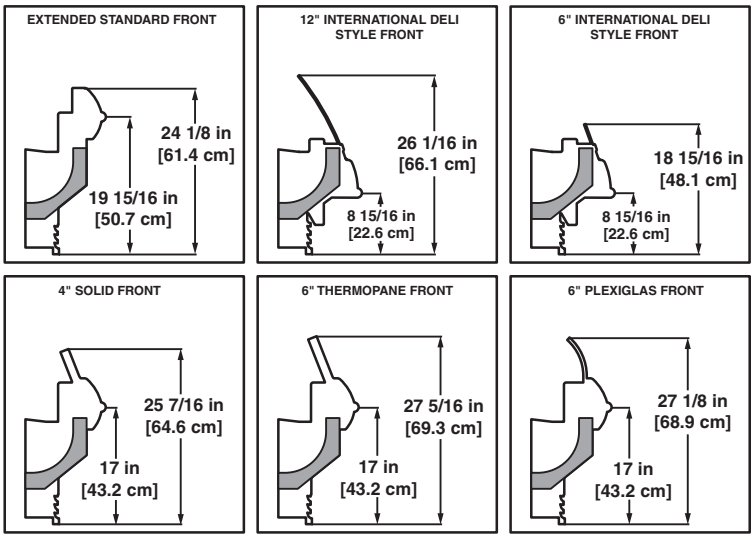

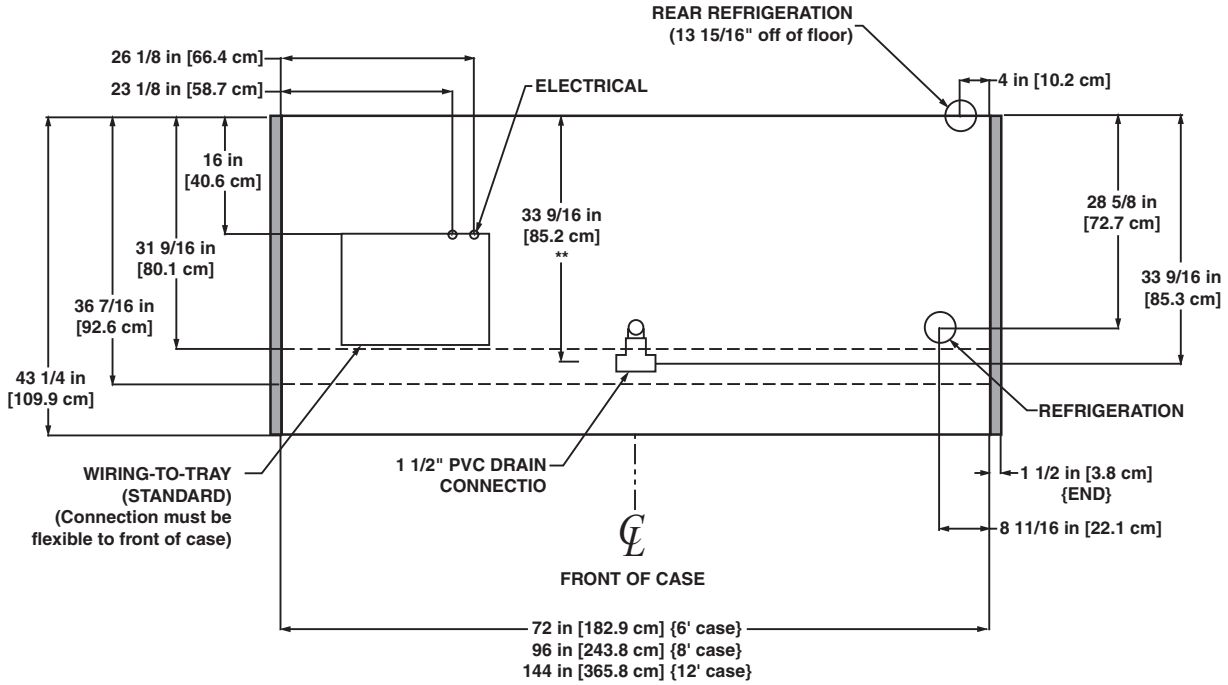

NOTES:

* STUB-UP AREA
** RECOMMENDED STUB-UP CENTERLINE FOR ELECTRICAL AND HUB DRAINS

- FRONT AND REAR SILL HEIGHTS VARY WITH BASEFRAME HEIGHT
- ENDS ADD APPROXIMATELY 1 INCH TO CASE HEIGHT
- A 2" MINIMUM AIR GAP IS REQUIRED BETWEEN THE REAR OF THE CASE AND A WALL
- SUCTION LINE (6') - 5/8", SUCTION LINE (8' & 12') - 7/8", LIQUID LINE (ALL LENGTHS) - 3/8"
- AVAILABLE SHELF SIZES: 10", 12", 14", 16" & 18"
- PRODUCT ON TOP SHELF SHOULD BE 3" BELOW DISCHARGE
- RECOMMENDED SHELF CONFIGURATION IN ROWS: 1-12", 1-14", 1-16" & 1-18"

MULTI-DECK

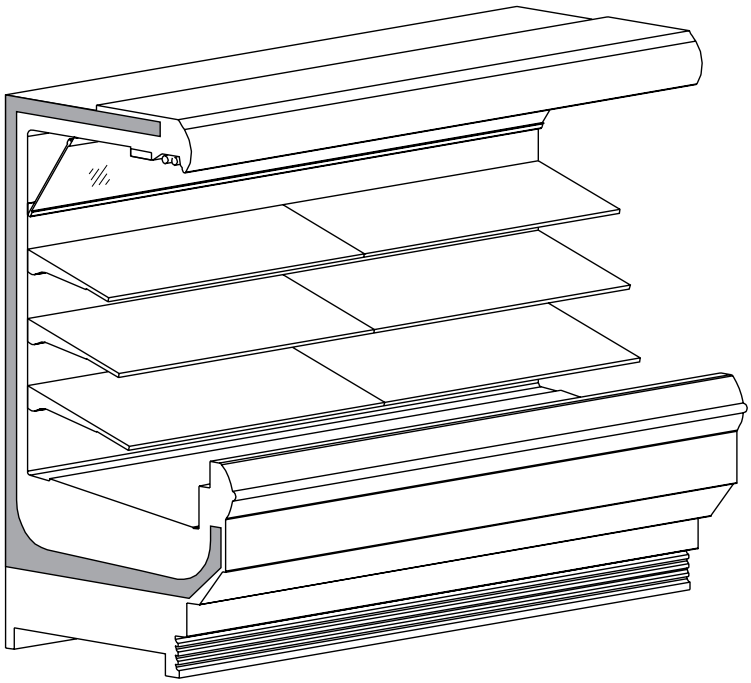

Notes:

- **Cases comply with ANSI / NSF* Standard 7. Units marked as components require remote refrigeration.**
- **Allow for an extra 1/8" per joint when lining up merchandisers.**
- **Front sill height does not affect case performance unless specifically shown.**
- **Front and rear sill heights vary with baseframe height.**

* ANSI - American National Standard Institute
NSF - National Sanitation Foundation

Multi-Deck Deli Back Bar Merchandiser

BB- 6′ & 8′

Electrical Data

Model		Fans per Case	Standard Fans 120 Volts Amps	Standard Fans 120 Volts Watts	High Efficiency Fans 120 Volts Amps	High Efficiency Fans 120 Volts Watts	Auxiliary Fans (Optional) 120 Volts Amps	Auxiliary Fans (Optional) 120 Volts Watts	Anti-Condensate Heaters 120 Volts Amps	Anti-Condensate Heaters 120 Volts Watts	Defrost Heaters 208 Volts Amps	Defrost Heaters 208 Volts Watts	Defrost Heaters 240 Volts Amps	Defrost Heaters 240 Volts Watts
BB	6′	4	1.36	68	0.60	44	1.60	92	- - -[1]	- - -	2.88	600	3.33	798
	8′	5	1.70	85	0.75	55	1.60	92	- - -	- - -	3.85	800	4.44	1065

[1] NOTE: - - - not an option on this case model.

Lighting Data

Model		Bulbs per Row	Bulb Length	Typical per Light Row 120 Volts Amps	Typical per Light Row 120 Volts Watts	Maximum Lighting 120 Volts Amps	Maximum Lighting 120 Volts Watts
BB	6′	2	3′	0.37	44	2.20	264
	8′	2	4′	0.47	56	2.80	336

Guidelines & Control Settings

Model	BTUH/ft[2]	Evaporator (°F)	Superheat Set Point @ Bulb (°F)	Discharge Air (°F)	Return Air (°F)	Discharge Air Velocity[3] (FPM)
BB	1290	17	6-8	32	45	325

[2] BTUHs/ft listed are for parallel operation. Conventional ratings may be approximated by multiplying listed rating by 1.04.

[3] Average discharge air velocity at peak of defrost.

Defrost Controls

Model	Defrosts Per Day	Run-Off Time (min)	Electric Defrost Fail-safe (min)	Electric Defrost Termination Temp. (°F)	Timed Off Defrost Fail-safe (min)	Timed Off Defrost Termination Temp. (°F)	Hot Gas Defrost Fail-safe (min)	Hot Gas Defrost Termination Temp. (°F)	Reverse Air Defrost Fail-safe (min)	Reverse Air Defrost Termination Temp. (°F)
BB	4	6 - 8	30	47[4]	45	47[4]	- - -	- - -	45	45

[4] Termination Temperature measured at the honeycomb.

Medium Temperature Defrost Schedule

No. Per Day	Hours
1	12 midnight
2	12 am - 12 pm
3	6 am - 2 pm - 10 pm
4	12 - 6 am - 12 - 6 pm

All measurements are taken per ARI 1200 - 2002 specifications.

Hill PHOENIX EXCELLENCE
A DOVER COMPANY
NSF COMPONENT
c UL us

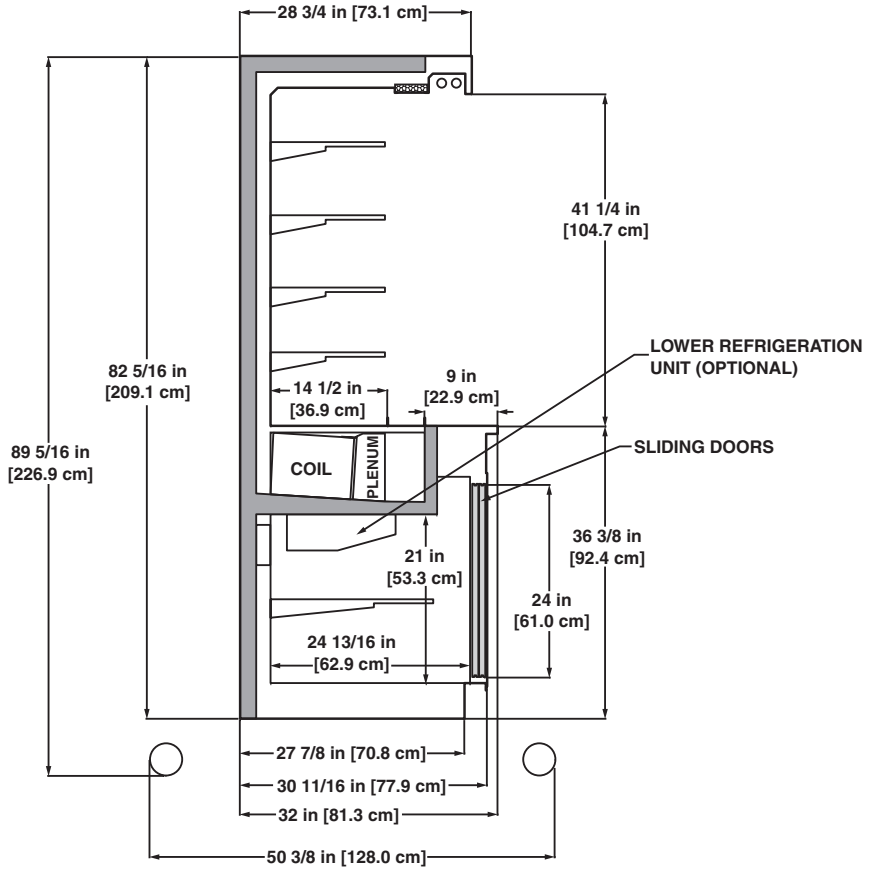

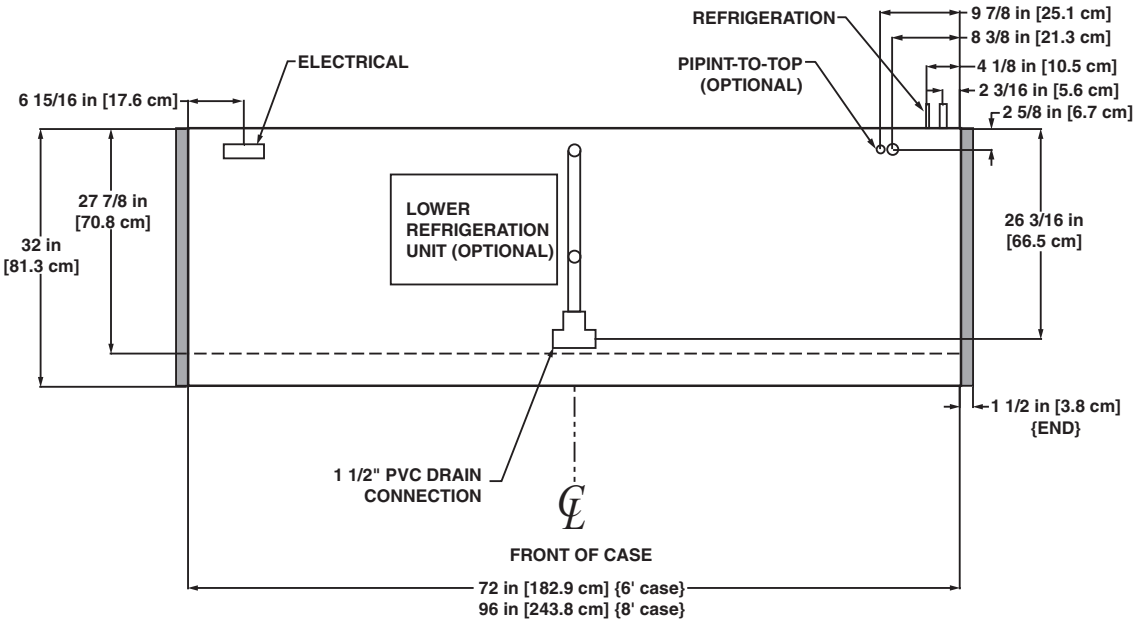

NOTES:

- ENDS ADD APPROXIMATELY 1 INCH TO CASE HEIGHT
- A 2" MINIMUM AIR GAP IS REQUIRED BETWEEN THE REAR OF THE CASE AND A WALL
- SUCTION LINE - 7/8", LIQUID LINE - 3/8"
- AVAILABLE SHELF SIZES: (UPPER SECTION) 12" & 14"
  (LOWER SECTION) 22"

NSF COMPONENT c UL us

A DOVER COMPANY

Narrow Multi-Deck Deli Merchandiser

ONN35U - 4′, 6′, 8′ & 12′

Electrical Data

Model		Fans per Case	Standard Fans 120 Volts Amps	Standard Fans 120 Volts Watts	High Efficiency Fans 120 Volts Amps	High Efficiency Fans 120 Volts Watts	Anti-Condensate Heaters 120 Volts Amps	Anti-Condensate Heaters 120 Volts Watts	Defrost Heaters 208 Volts Amps	Defrost Heaters 208 Volts Watts	Defrost Heaters 240 Volts Amps	Defrost Heaters 240 Volts Watts
ONN35U	4′	3	1.02	51	0.45	33	- - -[1]	- - -	1.92	400	2.22	532
	6′	4	1.36	68	0.60	44	- - -	- - -	2.88	600	3.33	798
	8′	4	1.36	68	0.60	44	- - -	- - -	3.85	800	4.44	1065
	12′	6	2.04	102	0.90	66	- - -	- - -	5.77	1200	6.67	1600

[1] NOTE: - - - not an option on this case model.

Lighting Data

Model		Bulbs per Row	Bulb Length	Typical per Light Row 120 Volts Amps	Typical per Light Row 120 Volts Watts	Maximum Lighting 120 Volts Amps	Maximum Lighting 120 Volts Watts
ONN35U	4′	1	4′	0.23	28	0.93	112
	6′	2	3′	0.37	44	1.47	176
	8′	2	4′	0.47	56	1.87	224
	12′	3	4′	0.70	84	2.80	336

Guidelines & Control Settings

Model	BTUH/ft[2]	Evaporator (°F)	Superheat Set Point @ Bulb (°F)	Discharge Air (°F)	Return Air (°F)	Discharge Air Velocity[3] (FPM)
ONN35U	700	22	6-8	35	45	275

[2] BTUHs/ft listed are for parallel operation. Conventional ratings may be approximated by multiplying listed rating by 1.04.

[3] Average discharge air velocity at peak of defrost.

Defrost Controls

Model	Defrosts Per Day	Run-Off Time (min)	Electric Defrost Fail-safe (min)	Electric Defrost Termination Temp. (°F)	Timed Off Defrost Fail-safe (min)	Timed Off Defrost Termination Temp. (°F)	Hot Gas Defrost Fail-safe (min)	Hot Gas Defrost Termination Temp. (°F)	Reverse Air Defrost Fail-safe (min)	Reverse Air Defrost Termination Temp. (°F)
ONN35U	4	6 - 8	35	47	45	47	26	45	- - -	- - -

Medium Temperature Defrost Schedule

No. Per Day	Hours
1	12 midnight
2	12 am - 12 pm
3	6 am - 2 pm - 10 pm
4	12 - 6 am - 12 - 6 pm

All measurements are taken per ARI 1200 - 2002 specifications.

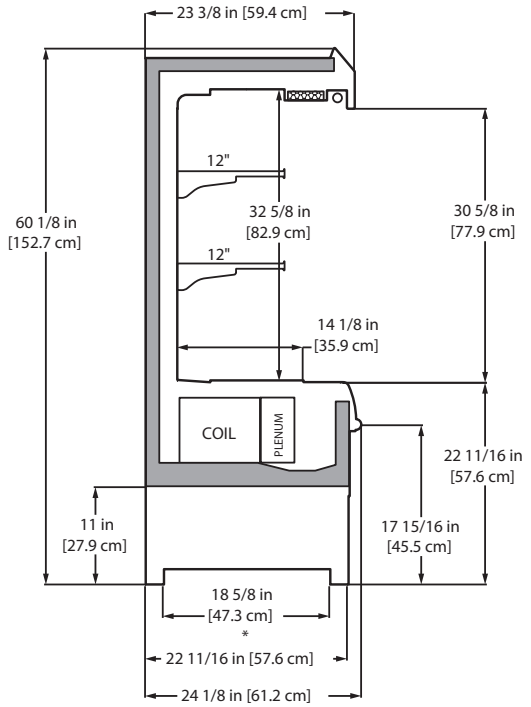

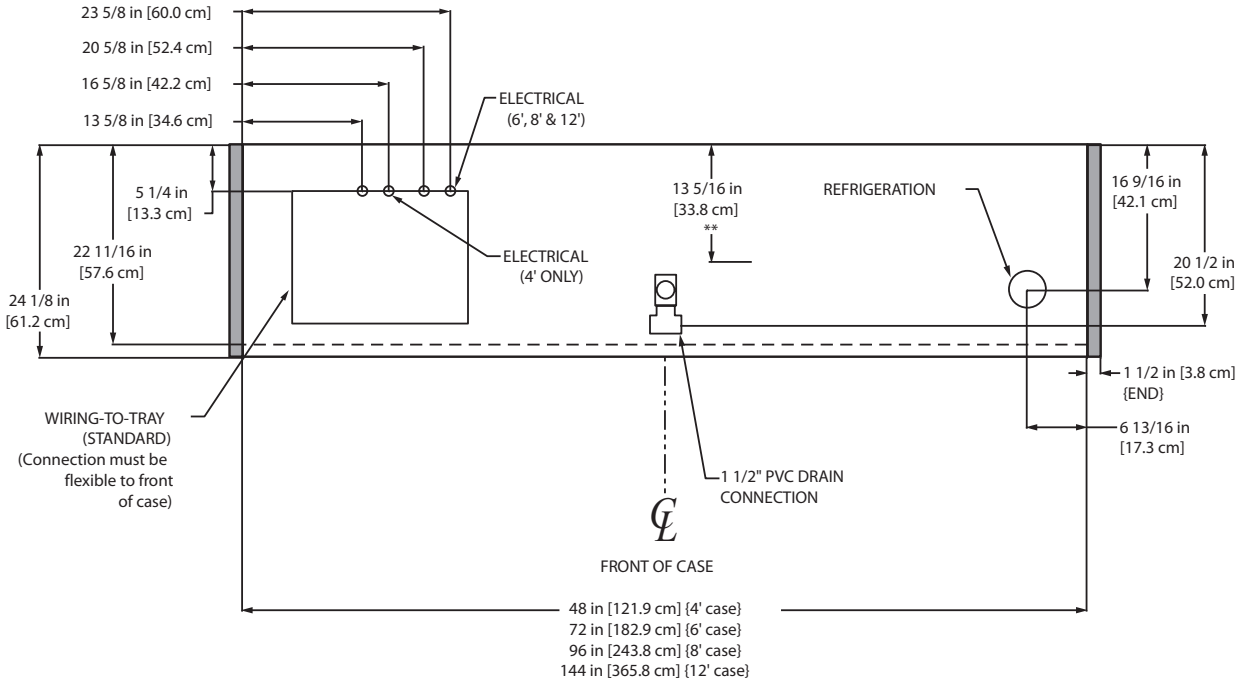

NOTES:

* STUB-UP AREA
** RECOMMENDED STUB-UP CENTERLINE FOR ELECTRICAL AND HUB DRAINS

- ENDS ADD APPROXIMATELY 1 INCH TO CASE HEIGHT
- SUCTION LINE - 7/8", LIQUID LINE - 3/8"
- AVAILABLE SHELF SIZES: 10" & 12"

Narrow Multi-Deck Self-Contained Deli Merchandiser

ONN35UA - 4′

System Requirements

Model		Volts	Phase	Hz	Wire	Minimum Circuit Ampacity	Maximum Overcurrent Protection
ONN35UA	4′	120	1	60	2 wire + ground	23.63	45

Electrical Data

Model		Fans per Case	Standard Fans		Condenser Fan		Drain Pump		Evap. Pan Heater		Maximum Lights	
			120 Volts		120 Volts		120 Volts		120 Volts		120 Volts	
			Amps	Watts	Amps	Watts	Amps	Watts	Amps	Watts	Amps	Watts
ONN35UA	4′	3	1.02	51	0.85	88	0.9	54	8.34	1000	0.57	68

Guidelines & Control Settings

Model	24 hr Energy Usage (kWh)	Suction Pressure @ Case Outlet (psig)	Superheat Set Point @ Bulb (°F)	Discharge Air (°F)	Return Air (°F)	Discharge Air Velocity[1] (FPM)
ONN35UA		19.9	6-8	35	45	275

[1] Average discharge air velocity at peak of defrost.

Condensing Unit Data

Model	Volts	Phase	Frequency (Hz)	HP	RLA[2] (amps)	LRA[3] (amps)	Refrig.	lbs of Refrig.
ONN35UA	120	1	60	1/2	12.9	66.3	R134A	2

[2] RLA - Running Load Amps.

[3] LRA - Locked Rotor Amps.

Defrost Controls

Model		Electric Defrost		Timed Off Defrost		Hot Gas Defrost		Reverse Air Defrost	
	Defrosts Per Day	Fail-safe (min)	Termination Temp. (°F)	Fail-safe (min)	Termination Temp. (°F)	Fail-safe (min)	Termination Temp. (°F)	Fail-safe (min)	Termination Temp. (°F)
ONN35UA	3	40	47	- - -[4]	- - -	- - -	- - -	- - -	- - -

[4] NOTE: - - - not an option on this case model.

Medium Temperature Defrost Schedule

No. Per Day	Hours
1	12 midnight
2	12 am - 12 pm
3	6 am - 2 pm - 10 pm
4	12 - 6 am - 12 - 6 pm

Hill PHOENIX EXCELLENCE

A DOVER™ COMPANY

All measurements are taken per ARI 1200 - 2002 specifications.

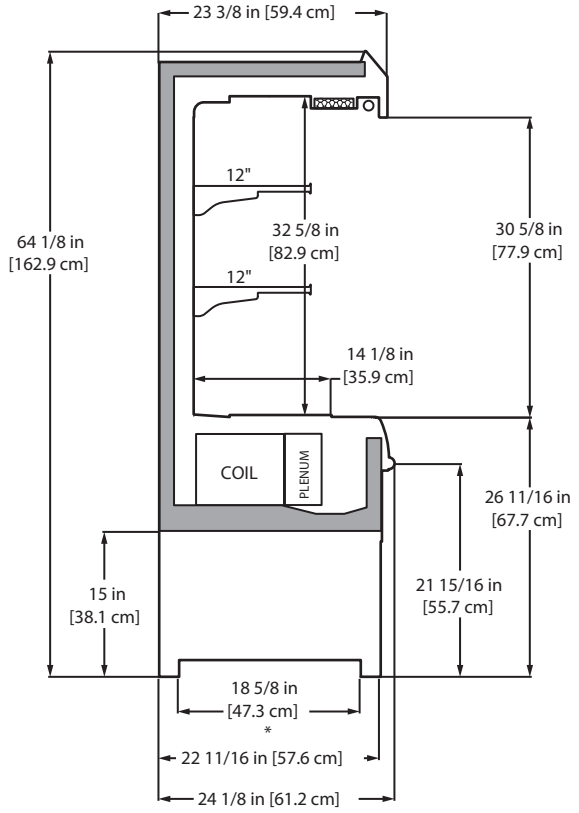
23 3/8 in [59.4 cm]
12"
64 1/8 in
[162.9 cm]
32 5/8 in
[82.9 cm]
30 5/8 in
[77.9 cm]
12"
14 1/8 in
[35.9 cm]
COIL
PLENUM
26 11/16 in
[67.7 cm]
15 in
[38.1 cm]
21 15/16 in
[55.7 cm]
18 5/8 in
[47.3 cm]
*
22 11/16 in [57.6 cm]
24 1/8 in [61.2 cm]

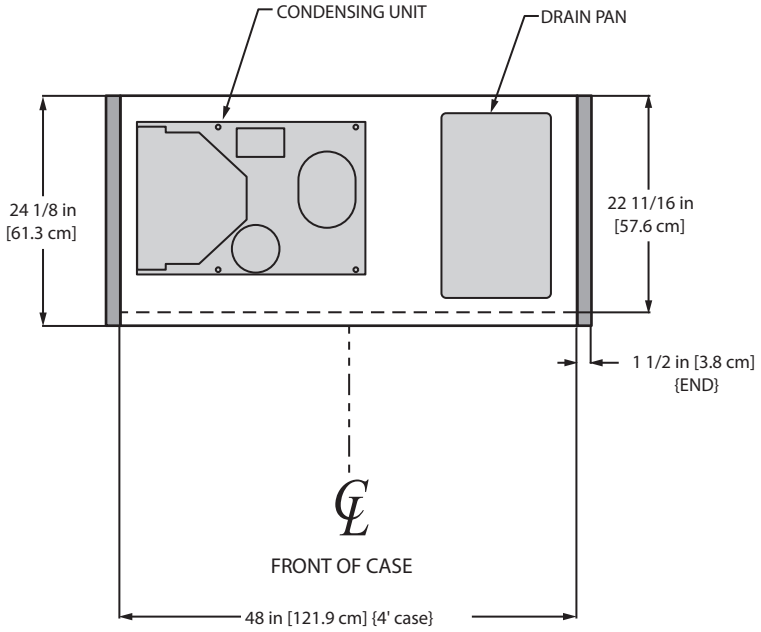
CONDENSING UNIT
DRAIN PAN
24 1/8 in
[61.3 cm]
22 11/16 in
[57.6 cm]
1 1/2 in [3.8 cm]
{END}
FRONT OF CASE
48 in [121.9 cm] {4' case}

Multi-Deck Utility Deli Merchandiser

ONN5U - 4′, 6′, 8′ & 12′

Electrical Data

Model		Fans per Case	Standard Fans 120 Volts Amps	Standard Fans 120 Volts Watts	High Efficiency Fans 120 Volts Amps	High Efficiency Fans 120 Volts Watts	Anti-Condensate Heaters 120 Volts Amps	Anti-Condensate Heaters 120 Volts Watts	Defrost Heaters 208 Volts Amps	Defrost Heaters 208 Volts Watts	Defrost Heaters 240 Volts Amps	Defrost Heaters 240 Volts Watts
ONN5U	4′	2	1.00	60	0.39	23.4	- - -[1]	- - -	1.92	400	2.22	532
	6′	2	1.00	60	0.39	23.4	- - -	- - -	2.88	600	3.33	798
	8′	3	1.50	90	0.59	35.1	- - -	- - -	3.85	800	4.44	1065
	12′	4	2.00	120	0.78	46.8	- - -	- - -	5.77	1200	6.67	1600

[1] NOTE: - - - not an option on this case model.

Lighting Data

Model		Bulbs per Row	Bulb Length	Typical per Light Row 120 Volts Amps	Typical per Light Row 120 Volts Watts	Maximum Lighting 120 Volts Amps	Maximum Lighting 120 Volts Watts
ONN5U	4′	1	4′	0.23	28	1.40	168
	6′	2	3′	0.37	44	2.20	264
	8′	2	4′	0.47	56	2.80	336
	12′	3	4′	0.70	84	4.20	504

Guidelines & Control Settings

Model	BTUH/ft[2]	Evaporator (°F)	Superheat Set Point @ Bulb (°F)	Discharge Air (°F)	Return Air (°F)	Discharge Air Velocity[3] (FPM)
ONN5U	990	20	6-8	33	44	245

[2] BTUHs/ft listed are for parallel operation. Conventional ratings may be approximated by multiplying listed rating by 1.04.

[3] Average discharge air velocity at peak of defrost.

Defrost Controls

Model	Defrosts Per Day	Run-Off Time (min)	Electric Defrost Fail-safe (min)	Electric Defrost Termination Temp. (°F)	Timed Off Defrost Fail-safe (min)	Timed Off Defrost Termination Temp. (°F)	Hot Gas Defrost Fail-safe (min)	Hot Gas Defrost Termination Temp. (°F)	Reverse Air Defrost Fail-safe (min)	Reverse Air Defrost Termination Temp. (°F)
ONN5U	4	6 - 8	35	47	45	47	- - -	- - -	- - -	- - -

Medium Temperature Defrost Schedule

No. Per Day	Hours
1	12 midnight
2	12 am - 12 pm
3	6 am - 2 pm - 10 pm
4	12 - 6 am - 12 - 6 pm

All measurements are taken per ARI 1200 - 2002 specifications.

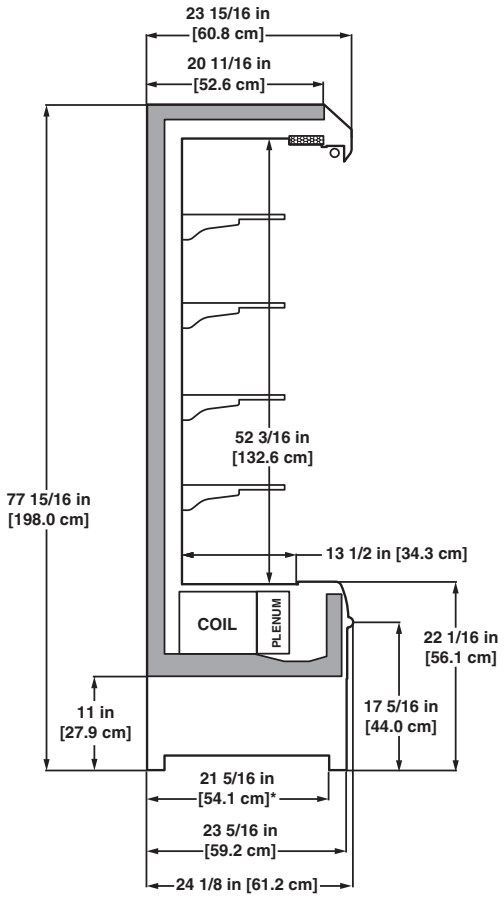

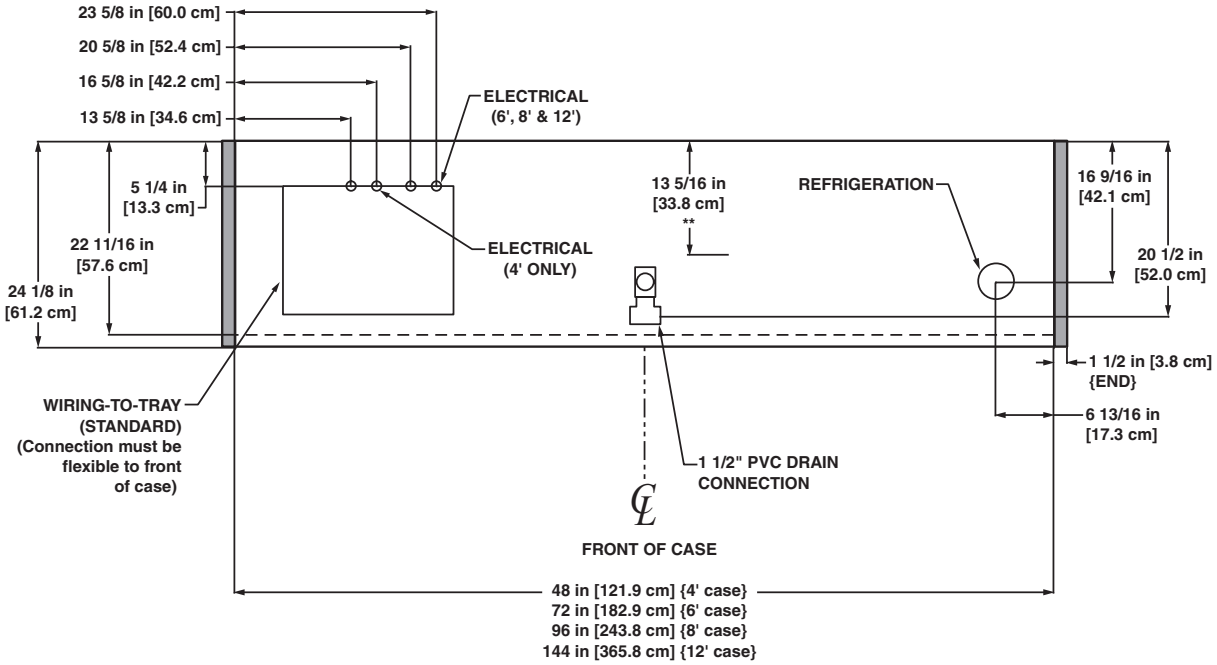

NOTES:

* STUB-UP AREA
** RECOMMENDED STUB-UP CENTERLINE FOR ELECTRICAL AND HUB DRAINS

- ENDS ADD APPROXIMATELY 1 INCH TO CASE HEIGHT
- SUCTION LINE - 7/8", LIQUID LINE - 3/8"
- AVAILABLE SHELF SIZES: 10" & 12"

NSF COMPONENT c UL us

A DOVER COMPANY

Narrow Multi-Deck Produce/Dairy/Deli Merchandiser

ON5DM - 4, 6′, 8′ & 12′

Electrical Data

Model		Fans per Case	Standard Fans 120 Volts Amps	Standard Fans 120 Volts Watts	High Efficiency Fans 120 Volts Amps	High Efficiency Fans 120 Volts Watts	Anti-Condensate Heaters 120 Volts Amps	Anti-Condensate Heaters 120 Volts Watts	Defrost Heaters 208 Volts Amps	Defrost Heaters 208 Volts Watts	Defrost Heaters 240 Volts Amps	Defrost Heaters 240 Volts Watts
ON5DM	4′	2	1.00	60	0.47	28	- - -[1]	- - -	1.92	400	2.22	532
	6′	3	1.50	90	0.70	42	- - -	- - -	2.88	600	3.33	798
	8′	4	2.00	120	0.93	56	- - -	- - -	3.85	800	4.44	1065
	12′	5	2.50	150	1.17	70	- - -	- - -	5.77	1200	6.67	1600

[1] NOTE: --- not an option on this case model.

Lighting Data

Model		Bulbs per Row	Bulb Length	Typical per Light Row 120 Volts Amps	Typical per Light Row 120 Volts Watts	Maximum Lighting 120 Volts Amps	Maximum Lighting 120 Volts Watts
ON5DM	4′	1	4′	0.23	28	2.10	252
	6′	2	3′	0.37	44	3.30	396
	8′	2	4′	0.47	56	4.20	504
	12′	3	4′	0.70	84	6.30	756

Guidelines & Control Settings

Model	Front Sill Heights	BTUH/ft[2]	Coil Type	Evaporator (°F)	Superheat Set Point @ Bulb (°F)	Discharge Air (°F)	Return Air (°F)	Discharge Air Velocity[4] (FPM)
ON5DM Deli Dairy Cut Produce	Std. Dairy	1811[3]	Enh.	22	6-8	32	47	215
	2.5″ Ext.	1766[3]	Enh.	22	6-8	31	44	215
	5″ Ext.	1739[3]	Enh.	22	6-8	31	40	215
	7.5″ Ext.	1681[3]	Enh.	22	6-8	31	40	215
ON5DM Beverage Bulk Produce	Std. Dairy	1670[3]	Enh.	29	6-8	37	53	215
	2.5″ Ext.	1628[3]	Enh.	29	6-8	36	52	215
	5″ Ext.	1576[3]	Enh.	29	6-8	36	52	215
	7.5″ Ext.	1550[3]	Enh.	29	6-8	36	52	215

[2] BTUHs/ft listed are for parallel operation. Conventional ratings may be approximated by multiplying listed rating by 1.04.

[3] High efficiency fans reduce refrigeration load by 96 BTUHs/fan.

[4] Average discharge air velocity at peak of defrost.

Defrost Controls

Model	Defrosts Per Day	Run-Off Time (min)	Electric Defrost Fail-safe (min)	Electric Defrost Termination Temp. (°F)	Timed Off Defrost Fail-safe (min)	Timed Off Defrost Termination Temp. (°F)	Hot Gas Defrost Fail-safe (min)	Hot Gas Defrost Termination Temp. (°F)	Reverse Air Defrost Fail-safe (min)	Reverse Air Defrost Termination Temp. (°F)
ON5DM	4	6 - 8	32	47	42	47	26	45	42	45

Medium Temperature Defrost Schedule

No. Per Day	Hours
1	12 midnight
2	12 am - 12 pm
3	6 am - 2 pm - 10 pm
4	12 - 6 am - 12 - 6 pm

All measurements are taken per ARI 1200 - 2002 specifications.

NSF COMPONENT

c UL us

Hill PHOENIX EXCELLENCE

A DOVER COMPANY

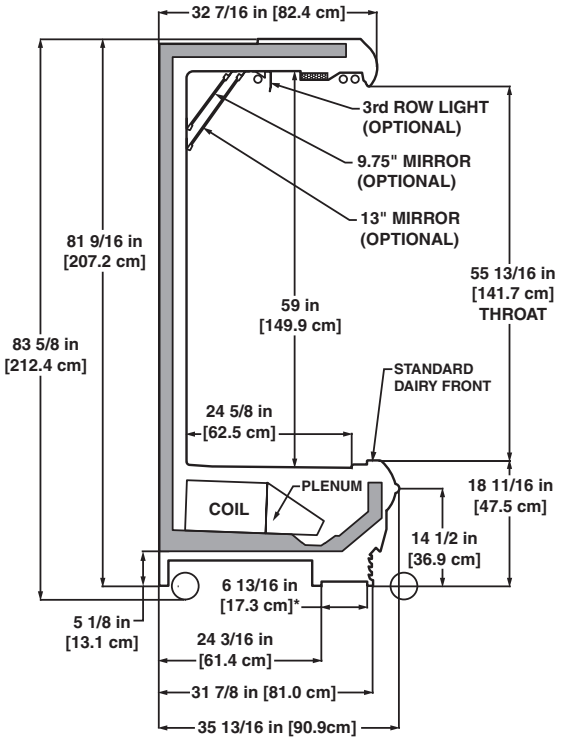

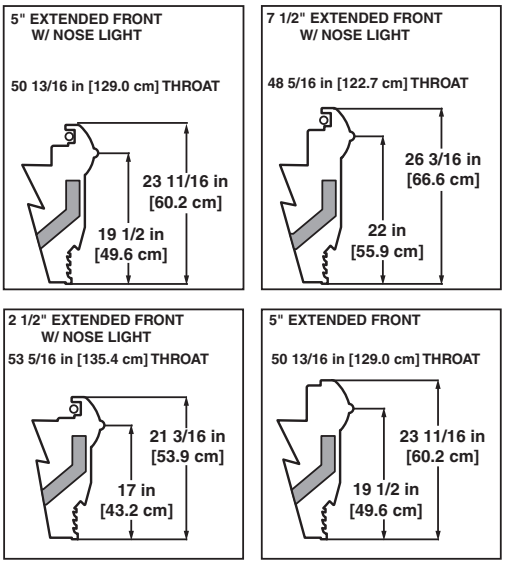

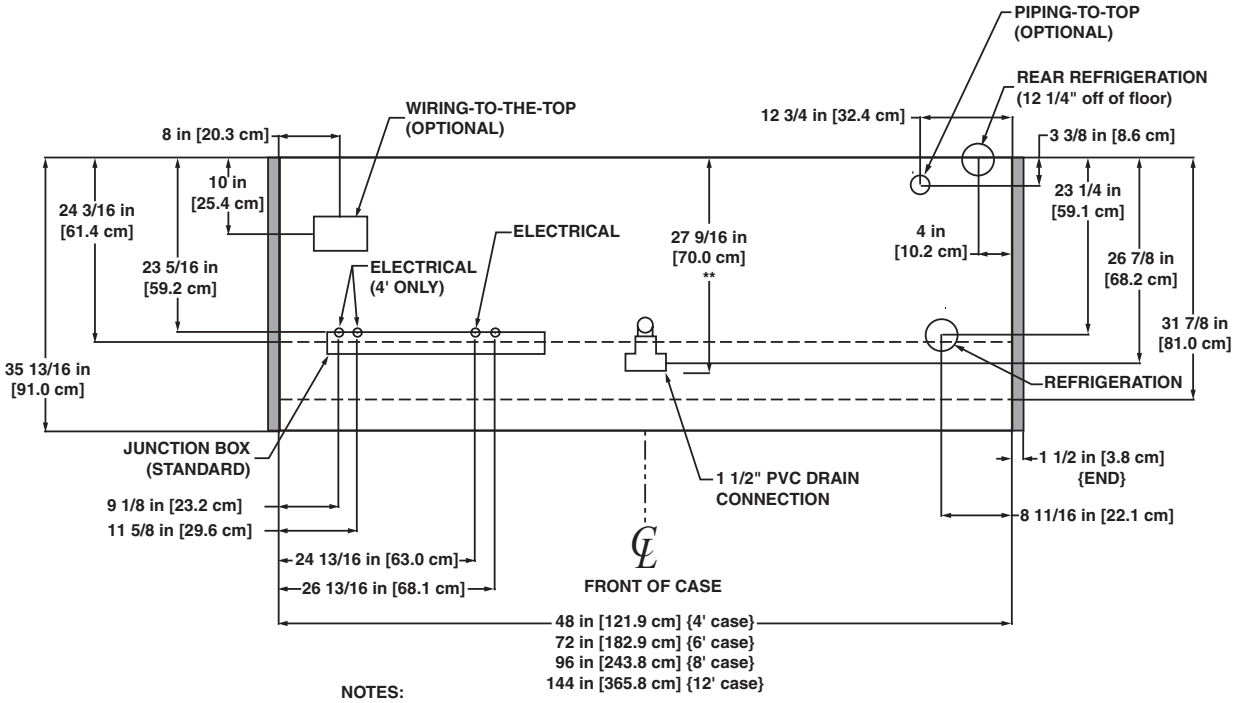

NOTES:

* STUB-UP AREA
** RECOMMENDED STUB-UP CENTERLINE FOR ELECTRICAL AND HUB DRAINS

- FRONT SILL HEIGHT AND OVERALL CASE HEIGHT VARYS WITH BASEFRAME HEIGHT
- ENDS ADD APPROXIMATELY 1 INCH TO CASE HEIGHT
- WIRING-TO-THE-TOP ADDS APPROXIMATELY 1 INCH TO CASE HEIGHT
- A 2" MINIMUM AIR GAP IS REQUIRED BETWEEN THE REAR OF THE CASE AND A WALL
- SUCTION LINE (4' & 6') - 5/8", SUCTION LINE (8' & 12') - 7/8", LIQUID LINE (ALL LENGTHS) - 3/8"
- AVAILABLE SHELF SIZES: 10", 12", 14", 16" & 18"

(TOP SHELF MUST BE 16" OR SHORTER. RECOMMENDED CONFIGURATION IS 16" SHELF AND 3 OR 4 18" SHELVES BELOW TOP SHELF)

NSF COMPONENT c UL us

A DOVER COMPANY

Narrow Multi-Deck Self-Contained Produce/Dairy Merchandiser

ON5DMA - 6′ & 8′

System Requirements

Model		Volts	Phase	Hz	Wire	Minimum Circuit Ampacity	Maximum Overcurrent Protection
ON5DMA	6′	208	1	60	3 wire + ground	25.412	45
	8′	208	1	60	3 wire + ground	25.534	45

Electrical Data

Model		Fans per Case	Standard Fans		Condenser Fan		Drain Pump		Evap. Pan Heater		Maximum Lights	
			120 Volts		208 Volts		120 Volts		208 Volts		120 Volts	
			Amps	Watts	Amps	Watts	Amps	Watts	Amps	Watts	Amps	Watts
ON5DMA	6′	3	1.50	90	1.10	114	1.10	66	7.21	1500	4.70	564
	8′	4	2.00	120	1.10	114	1.10	66	7.21	1500	4.70	564

Guidelines & Control Settings

Model	24 hr Energy Usage (kWh)	Suction Pressure @ Case Outlet (psig)	Superheat Set Point @ Bulb (°F)	Discharge Air (°F)	Return Air (°F)	Discharge Air Velocity[1] (FPM)
ON5DMA-6′		52	6-8	31	44	215
ON5DMA-8′		52	6-8	31	44	215

[1] Average discharge air velocity at peak of defrost.

Condensing Unit Data

Model	Volts	Phase	Frequency (Hz)	HP	RLA[2] (amps)	LRA[3] (amps)	Refrig.	lbs of Refrig.
ON5DMA-6′	208	1	60	1 3/4	10.9	56	R404A	
ON5DMA-8′	208	1	60	2 1/4	12.4	61	R404A	

[2] RLA - Running Load Amps.
[3] LRA - Locked Rotor Amps.

Defrost Controls

Model	Defrosts Per Day	Run-Off Time (min)	Electric Defrost		Timed Off Defrost		Hot Gas Defrost		Reverse Air Defrost	
			Fail-safe (min)	Termination Temp. (°F)	Fail-safe (min)	Termination Temp. (°F)	Fail-safe (min)	Termination Temp. (°F)	Fail-safe (min)	Termination Temp. (°F)
ON5DMA	4	6 - 8	- - -[4]	- - -	42	47	- - -	- - -	- - -	- - -

[4] NOTE: - - - not an option on this case model.

Medium Temperature Defrost Schedule

No. Per Day	Hours
1	12 midnight
2	12 am - 12 pm
3	6 am - 2 pm - 10 pm
4	12 - 6 am - 12 - 6 pm

All measurements are taken per ARI 1200 - 2002 specifications.

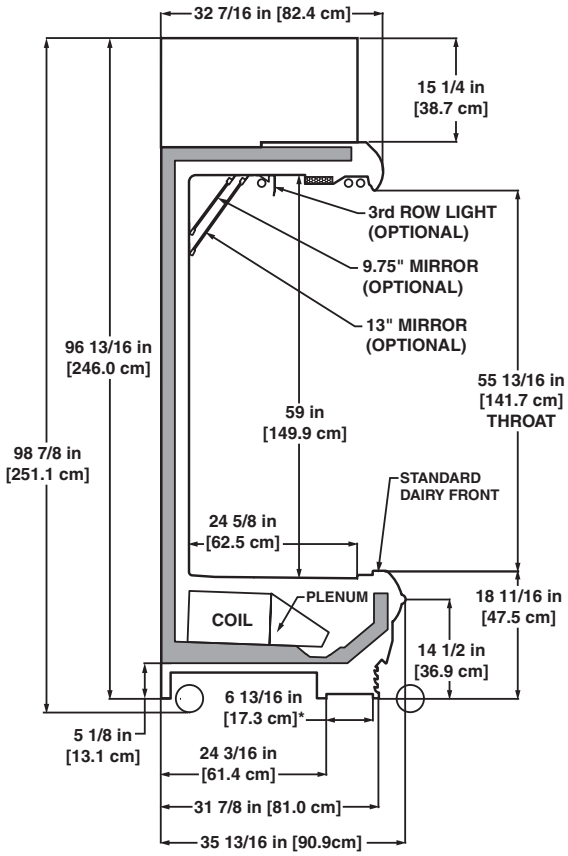

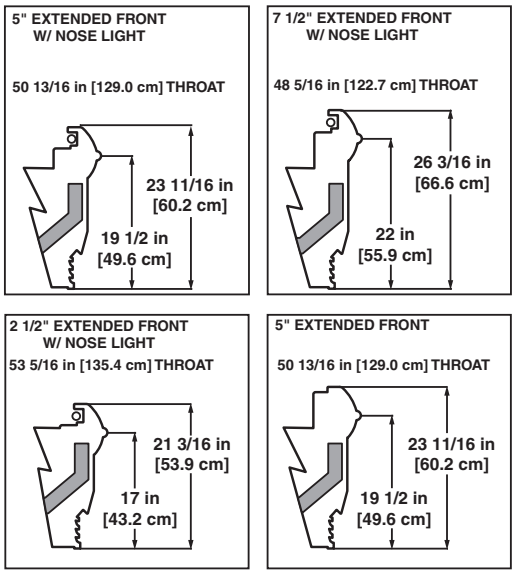

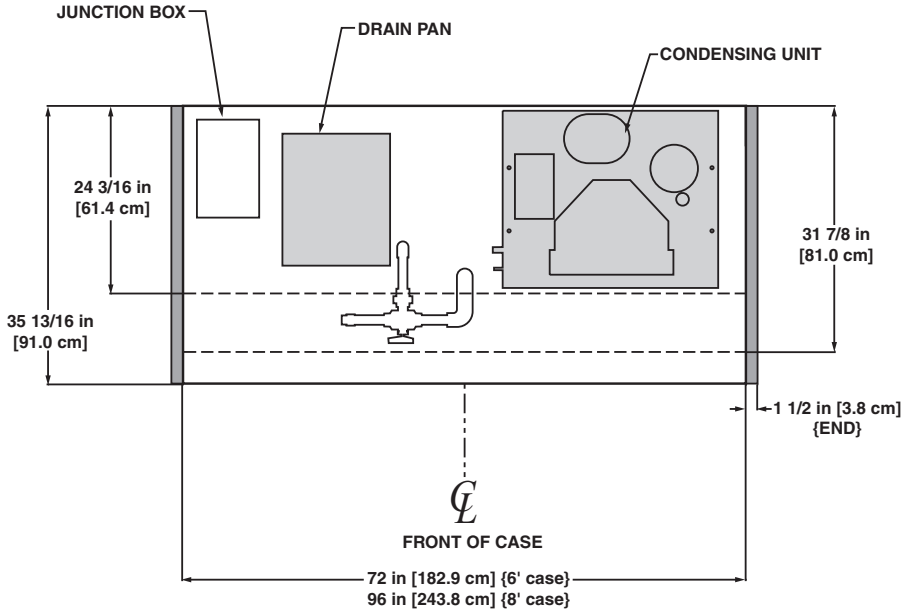

NOTES:

- FRONT SILL HEIGHT AND OVERALL CASE HEIGHT VARYS WITH BASEFRAME HEIGHT
- A 2" MINIMUM AIR GAP IS REQUIRED BETWEEN THE REAR OF THE CASE AND A WALL
- AVAILABLE SHELF SIZES: 10", 12", 14", 16" & 18"

(TOP SHELF MUST BE 16" OR SHORTER. RECOMMENDED CONFIGURATION IS 16" SHELF AND 3 OR 4 18" SHELVES BELOW TOP SHELF)

High Narrow Multi-Deck Produce/Dairy Merchandiser

ON5DMH - 4′, 6′, 8′ & 12′

Electrical Data

Model		Fans per Case	Standard Fans 120 Volts Amps	Standard Fans 120 Volts Watts	High Efficiency Fans 120 Volts Amps	High Efficiency Fans 120 Volts Watts	Anti-Condensate Heaters 120 Volts Amps	Anti-Condensate Heaters 120 Volts Watts	Defrost Heaters 208 Volts Amps	Defrost Heaters 208 Volts Watts	Defrost Heaters 240 Volts Amps	Defrost Heaters 240 Volts Watts
ON5DMH	4′	2	1.00	60	0.47	28	- - -[1]	- - -	1.92	400	2.22	532
	6′	3	1.50	90	0.70	42	- - -	- - -	2.88	600	3.33	798
	8′	4	2.00	120	0.93	56	- - -	- - -	3.85	800	4.44	1065
	12′	5	2.50	150	1.17	70	- - -	- - -	5.77	1200	6.67	1600

[1] NOTE: --- not an option on this case model.

Lighting Data

Model		Bulbs per Row	Bulb Length	Typical per Light Row 120 Volts Amps	Typical per Light Row 120 Volts Watts	Maximum Lighting 120 Volts Amps	Maximum Lighting 120 Volts Watts
ON5DMH	4′	1	4′	0.23	28	2.10	252
	6′	2	3′	0.37	44	3.30	396
	8′	2	4′	0.47	56	4.20	504
	12′	3	4′	0.70	84	6.30	756

Guidelines & Control Settings

Model	Front Sill Heights	BTUH/ft[2]	Coil Type	Evaporator (°F)	Superheat Set Point @ Bulb (°F)	Discharge Air (°F)	Return Air (°F)	Discharge Air Velocity[4] (FPM)
ON5DMH Dairy Cut Produce	Std. Dairy	1840[3]	Enh.	22	6-8	33	48	215
	2.5″ Ext.	1795[3]	Enh.	22	6-8	33	45	215
	5″ Ext.	1779[3]	Enh.	22	6-8	32	41	215
	7.5″ Ext.	1700[3]	Enh.	22	6-8	32	41	215
ON5DMH Beverage Bulk Produce	Std. Dairy	1700[3]	Enh.	29	6-8	37	54	215
	2.5″ Ext.	1640[3]	Enh.	29	6-8	37	53	215
	5″ Ext.	1608[3]	Enh.	29	6-8	36	52	215
	7.5″ Ext.	1595[3]	Enh.	29	6-8	36	52	215

[2] BTUHs/ft listed are for parallel operation. Conventional ratings may be approximated by multiplying listed rating by 1.04.

[3] High efficiency fans reduce refrigeration load by 96 BTUHs/fan.

[4] Average discharge air velocity at peak of defrost.

Defrost Controls

Model	Defrosts Per Day	Run-Off Time (min)	Electric Defrost Fail-safe (min)	Electric Defrost Termination Temp. (°F)	Timed Off Defrost Fail-safe (min)	Timed Off Defrost Termination Temp. (°F)	Hot Gas Defrost Fail-safe (min)	Hot Gas Defrost Termination Temp. (°F)	Reverse Air Defrost Fail-safe (min)	Reverse Air Defrost Termination Temp. (°F)
ON5DMH	4	6 - 8	32	47	42	47	26	45	42	45

Medium Temperature Defrost Schedule

No. Per Day	Hours
1	12 midnight
2	12 am - 12 pm
3	6 am - 2 pm - 10 pm
4	12 - 6 am - 12 - 6 pm

All measurements are taken per ARI 1200 - 2002 specifications.

NSF COMPONENT

c UL us

Hill PHOENIX EXCELLENCE

A DOVER COMPANY

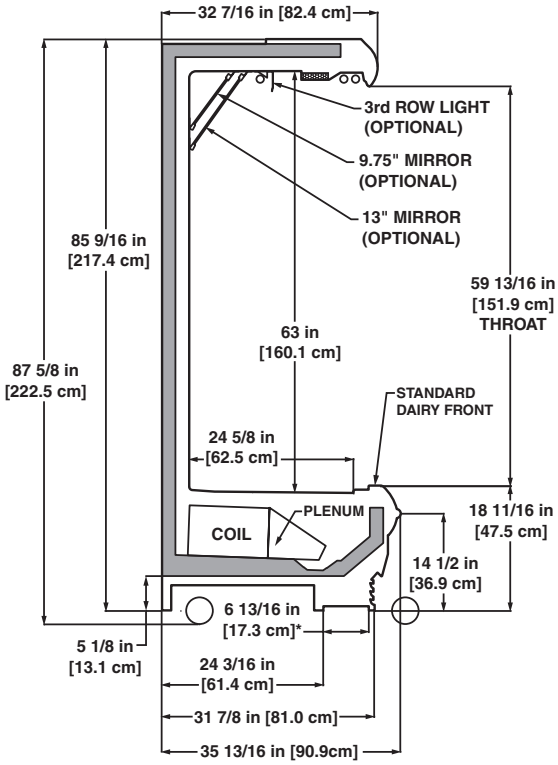

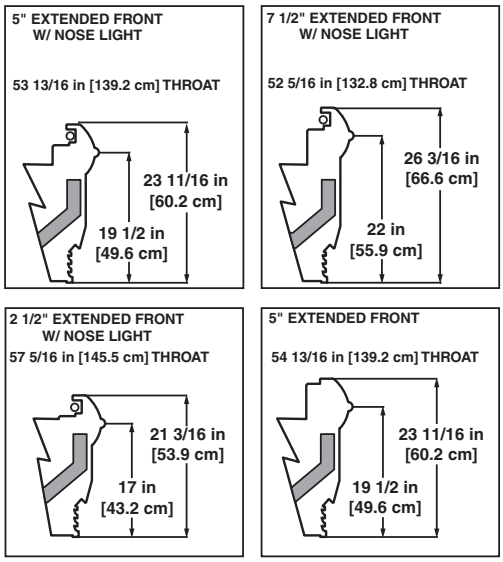

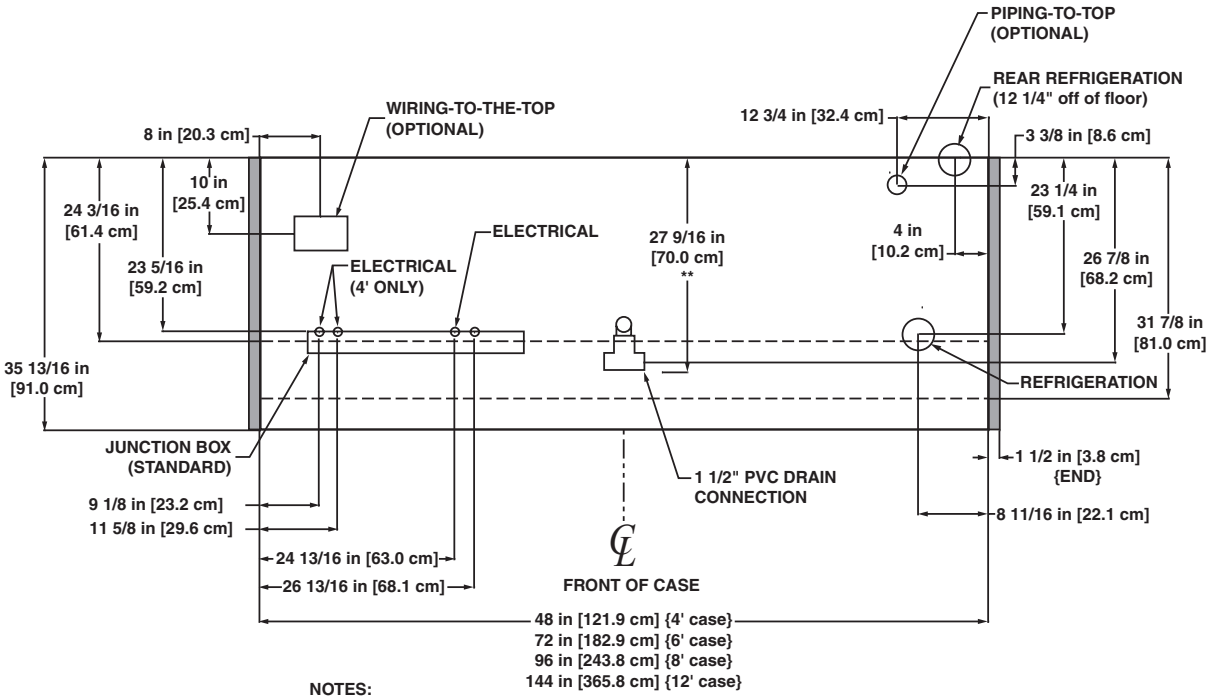

NOTES:

* STUB-UP AREA
** RECOMMENDED STUB-UP CENTERLINE FOR ELECTRICAL AND HUB DRAINS

- FRONT SILL HEIGHT AND OVERALL CASE HEIGHT VARYS WITH BASEFRAME HEIGHT
- ENDS ADD APPROXIMATELY 1 INCH TO CASE HEIGHT
- WIRING-TO-THE-TOP ADDS APPROXIMATELY 1 INCH TO CASE HEIGHT
- A 2" MINIMUM AIR GAP IS REQUIRED BETWEEN THE REAR OF THE CASE AND A WALL
- SUCTION LINE (4' & 6') - 5/8", SUCTION LINE (8' & 12') - 7/8", LIQUID LINE (ALL LENGTHS) - 3/8"
- AVAILABLE SHELF SIZES: 10", 12", 14", 16" & 18"

(TOP SHELF MUST BE 16" OR SHORTER. RECOMMENDED CONFIGURATION IS 16" SHELF AND 3 OR 4 18" SHELVES BELOW TOP SHELF)

Multi-Deck Produce/Dairy/Deli Merchandiser

O5DM - 4′, 6′, 8′ & 12′

Electrical Data

Model		Fans per Case	Standard Fan 120 Volts Amps	Standard Fan 120 Volts Watts	High Efficiency Fans 120 Volts Amps	High Efficiency Fans 120 Volts Watts	Anti-Condensate Heaters 120 Volts Amps	Anti-Condensate Heaters 120 Volts Watts	Defrost Heaters 208 Volts Amps	Defrost Heaters 208 Volts Watts	Defrost Heaters 240 Volts Amps	Defrost Heaters 240 Volts Watts
O5DM	4′	2	1.00	60	0.47	28	- - -[1]	- - -	1.92	400	2.22	532
	6′	2	1.00	60	0.47	28	- - -	- - -	2.88	600	3.33	798
	8′	3	1.50	90	0.70	42	- - -	- - -	3.85	800	4.44	1065
	12′	4	2.00	120	0.93	56	- - -	- - -	5.77	1200	6.67	1600

[1] NOTE: - - - not an option on this case model.

Lighting Data

Model		Bulbs per Row	Bulb Length	Typical per Light Row 120 Volts Amps	Typical per Light Row 120 Volts Watts	Maximum Lighting 120 Volts Amps	Maximum Lighting 120 Volts Watts
O5DM	4′	1	4′	0.23	28	2.10	252
	6′	2	3′	0.37	44	3.30	396
	8′	2	4′	0.47	56	4.20	504
	12′	3	4′	0.70	84	6.30	756

Guidelines & Control Settings

Model	Front Sill Heights	BTUH/ft[2]	Coil Type	Evaporator (°F)	Superheat Set Point @ Bulb (°F)	Discharge Air (°F)	Return Air (°F)	Discharge Air Velocity[4] (FPM)
O5DM Deli w/ Shelf Lights	2.5″ Ext.	1570[3]	Enh.	22	6-8	30	44	270
	5″ Ext.	1530[3]	Enh.	22	6-8	30	44	270
	7.5″ Ext.	1500[3]	Enh.	22	6-8	30	44	270
O5DM Dairy Cut Produce w/ Shelf Lights	Std. Dairy	1470[3]	Enh.	26	6-8	34	47	270
	2.5″ Ext.	1431[3]	Enh.	26	6-8	34	47	270
	5″ Ext.	1401[3]	Enh.	26	6-8	34	47	270
	7.5″ Ext.	1370[3]	Enh.	26	6-8	34	47	270
O5DM Beverage Bulk Produce w/o Shelf Lights	Std. Dairy	1490[3]	Enh.	29	6-8	36	52	270
	2.5″ Ext.	1450[3]	Enh.	29	6-8	36	52	270
	5″ Ext.	1420[3]	Enh.	29	6-8	36	52	270
	7.5″ Ext.	1390[3]	Enh.	29	6-8	36	52	270

[2] BTUHs/ft listed are for parallel operation. Conventional ratings may be approximated by multiplying listed rating by 1.04.

[3] High efficiency fans reduce refrigeration load by 96 BTUHs/fan.

[4] Average discharge air velocity at peak of defrost.

Defrost Controls

Model	Defrosts Per Day	Run-Off Time (min)	Electric Defrost Fail-safe (min)	Electric Defrost Termination Temp. (°F)	Timed Off Defrost Fail-safe (min)	Timed Off Defrost Termination Temp. (°F)	Hot Gas Defrost Fail-safe (min)	Hot Gas Defrost Termination Temp. (°F)	Reverse Air Defrost Fail-safe (min)	Reverse Air Defrost Termination Temp. (°F)
O5DM	4	6 - 8	32	47	42	47	26	45	42	45

Medium Temperature Defrost Schedule

No. Per Day	Hours
1	12 midnight
2	12 am - 12 pm
3	6 am - 2 pm - 10 pm
4	12 - 6 am - 12 - 6 pm

All measurements are taken per ARI 1200 - 2002 specifications.

NSF COMPONENT

c UL us

Hill PHOENIX EXCELLENCE

A DOVER COMPANY

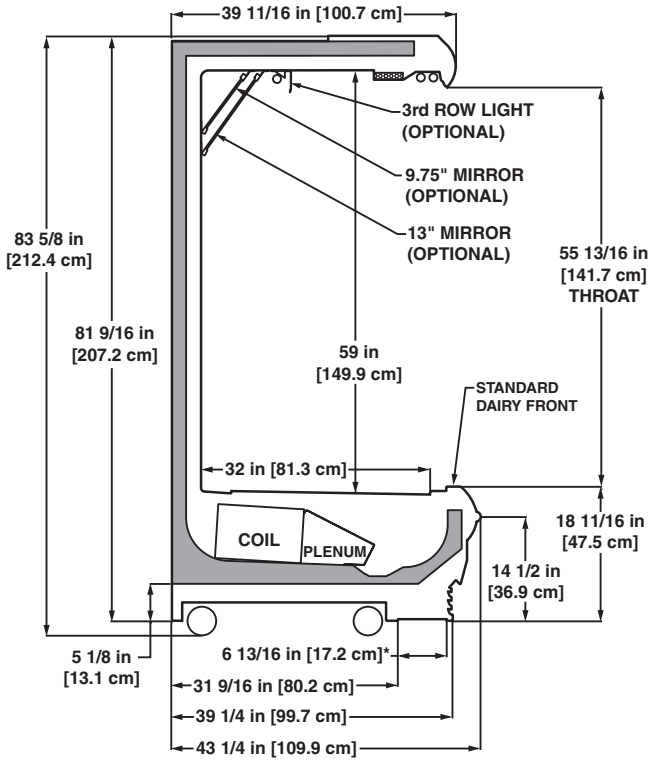

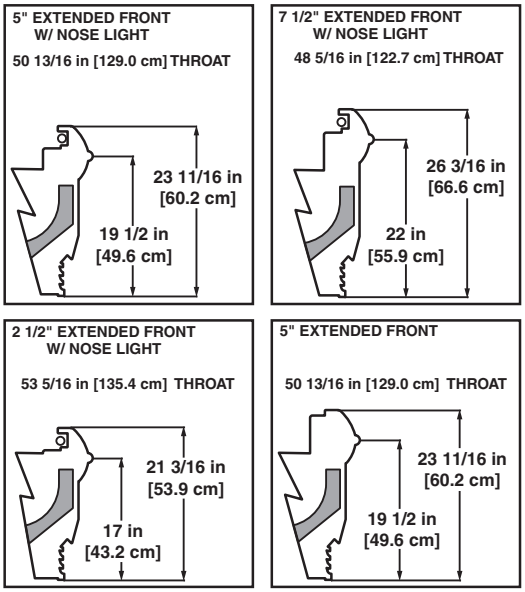

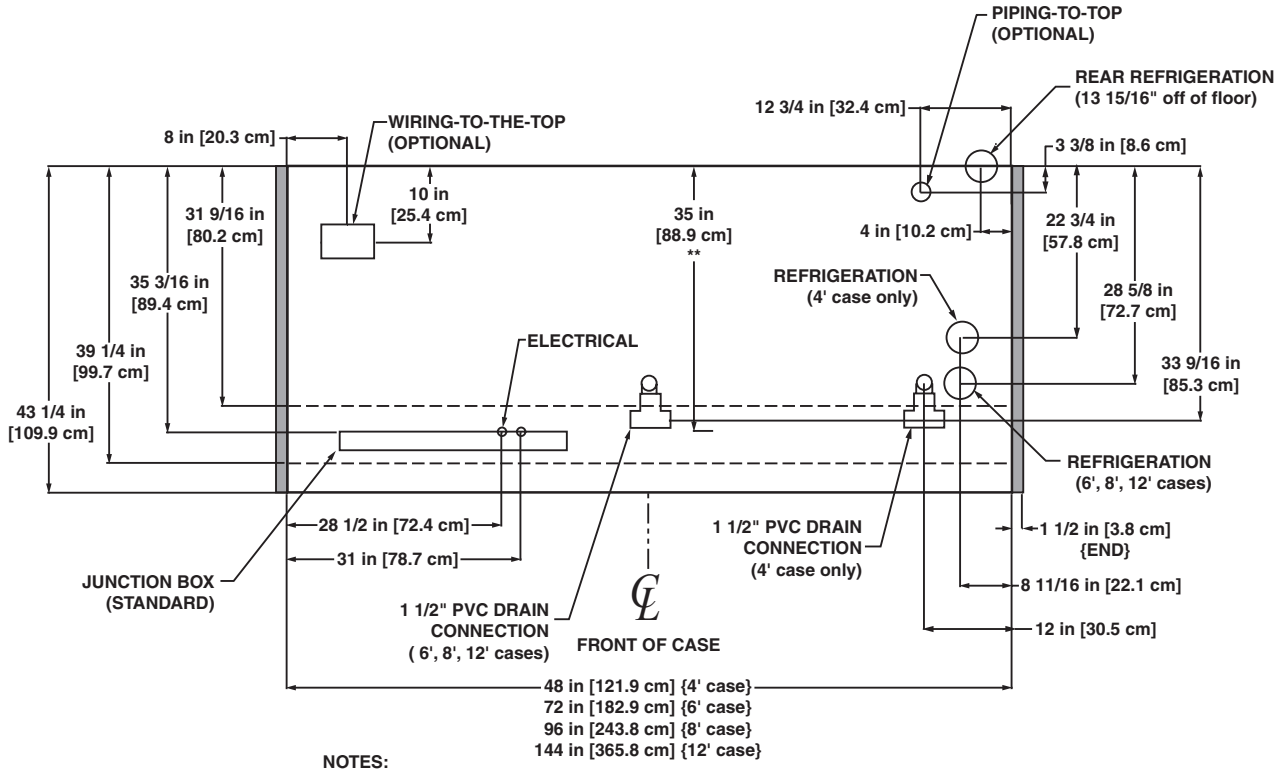

NOTES:

* STUB-UP AREA
** RECOMMENDED STUB-UP CENTERLINE FOR ELECTRICAL AND HUB DRAINS

- FRONT SILL HEIGHT AND OVERALL CASE HEIGHT VARYS WITH BASEFRAME HEIGHT
- ENDS ADD APPROXIMATELY 1 INCH TO CASE HEIGHT
- WIRING-TO-THE-TOP ADDS APPROXIMATELY 1 INCH TO CASE HEIGHT
- A 2" MINIMUM AIR GAP IS REQUIRED BETWEEN THE REAR OF THE CASE AND A WALL
- SUCTION LINE (4' & 6') - 5/8", SUCTION LINE (8' & 12') - 7/8", LIQUID LINE (ALL LENGTHS) - 3/8"
- AVAILABLE SHELF SIZES: 10", 12", 14", 16", 18", 20", 22" & 24"

Multi-Deck Self-Contained Produce/Dairy/Deli Merchandiser

O5DMA - 4′, 6′ & 8′

System Requirements

Model		Volts	Phase	Hz	Wire	Minimum Circuit Ampacity	Maximum Overcurrent Protection
O5DMA	4′	208	1	60	3 wire + ground	22.096	35
	6′	208	1	60	3 wire + ground	23.034	40
	8′	208	1	60	3 wire + ground	23.934	45

Electrical Data

Model		Fans per Case	Standard Fans		Condenser Fan		Drain Pump		Evap. Pan Heater		Maximum Lights	
			120 Volts		208 Volts		120 Volts		208 Volts		120 Volts	
			Amps	Watts	Amps	Watts	Amps	Watts	Amps	Watts	Amps	Watts
O5DMA	4′	2	1.00	60	0.85	88	1.10	66	7.21	1500	3.18	382
	6′	2	1.00	60	1.10	114	1.10	66	7.21	1500	4.59	551
	8′	3	1.50	90	2.60	270	1.10	66	7.21	1500	4.59	551

Guidelines & Control Settings

Model	24 hr Energy Usage (kWh)	Suction Pressure @ Case Outlet (psig)	Superheat Set Point @ Bulb (°F)	Discharge Air (°F)	Return Air (°F)	Discharge Air Velocity[1] (FPM)
O5DMA-4′		52	6-8	30	44	250
O5DMA-6′		52	6-8	30	44	250
O5DMA-8′		52	6-8	30	44	250

[1] Average discharge air velocity at peak of defrost.

Condensing Unit Data

Model	Volts	Phase	Frequency (Hz)	HP	RLA[2] (amps)	LRA[3] (amps)	Refrig.	lbs of Refrig.
O5DMA-4′	208	1	60	1	9.6	51	R404A	4.5
O5DMA-6′	208	1	60	1 3/4	10.9	56	R404A	
O5DMA-8′	208	1	60	2 1/4	12.4	61	R404A	9.7

[2] RLA - Running Load Amps.
[3] LRA - Locked Rotor Amps.

Defrost Controls

Model	Defrosts Per Day	Electric Defrost		Timed Off Defrost		Hot Gas Defrost		Reverse Air Defrost	
		Fail-safe (min)	Termination Temp. (°F)	Fail-safe (min)	Termination Temp. (°F)	Fail-safe (min)	Termination Temp. (°F)	Fail-safe (min)	Termination Temp. (°F)
O5DMA	4	- - - [4]	- - -	42	47	- - -	- - -	- - -	- - -

[4] NOTE: - - - not an option on this case model.

Medium Temperature Defrost Schedule

No. Per Day	Hours
1	12 midnight
2	12 am - 12 pm
3	6 am - 2 pm - 10 pm
4	12 - 6 am - 12 - 6 pm

All measurements are taken per ARI 1200 - 2002 specifications.

Hill PHOENIX EXCELLENCE

A DOVER COMPANY

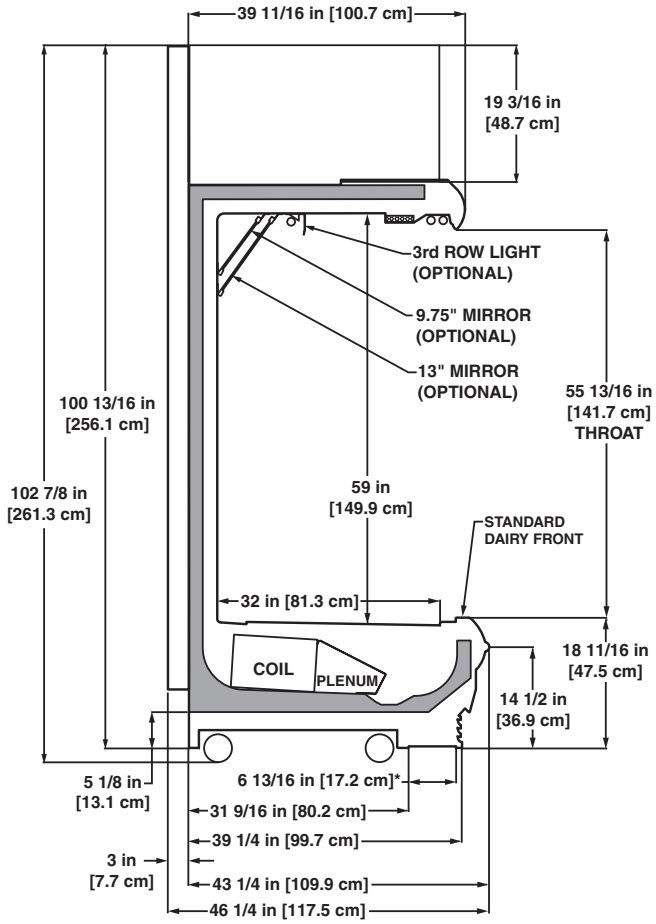

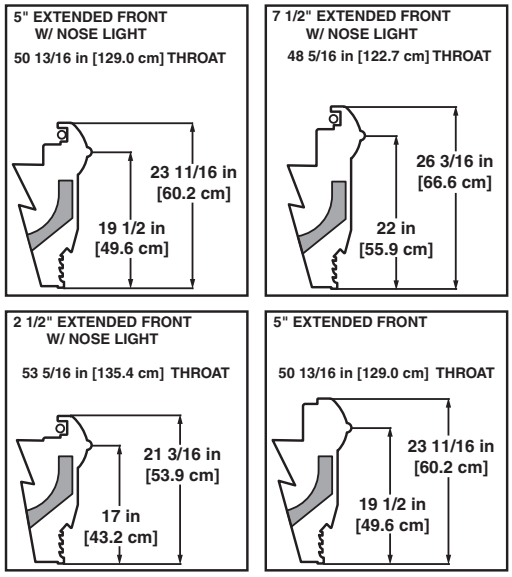

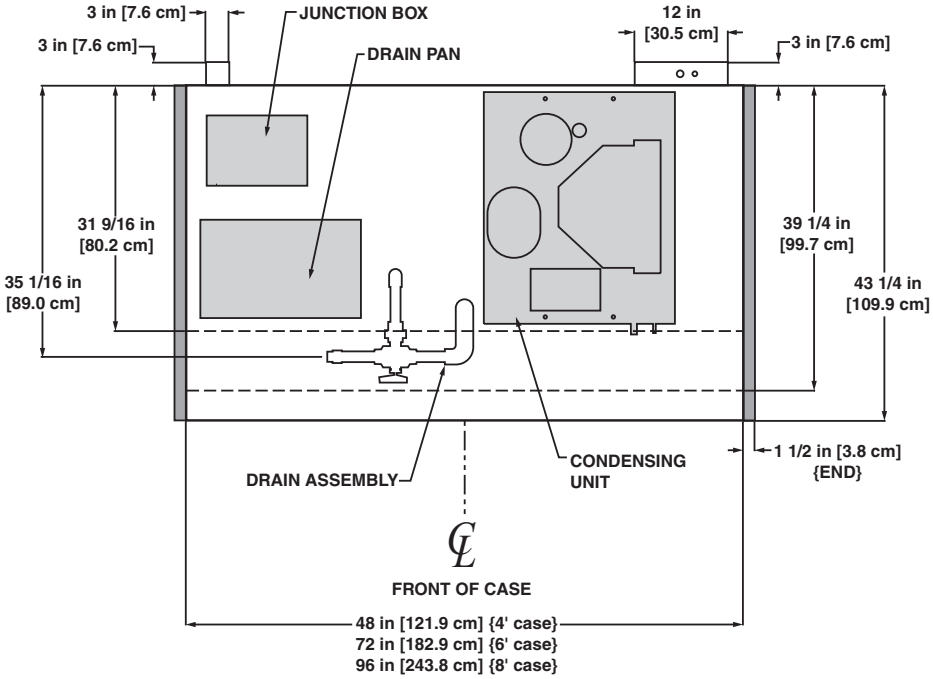

NOTES:

- FRONT SILL HEIGHT AND OVERALL CASE HEIGHT VARYS WITH BASEFRAME HEIGHT
- A 2" MINIMUM AIR GAP IS REQUIRED BETWEEN THE REAR OF THE CASE AND A WAI
- AVAILABLE SHELF SIZES: 10", 12", 14", 16", 18", 20", 22" & 24"

High Multi-Deck Produce/Dairy/Deli Merchandiser

O5DMH - 4′, 6′, 8′ & 12′

Electrical Data

Model		Fans per Case	Standard Fan 120 Volts Amps	Standard Fan 120 Volts Watts	High Efficiency Fans 120 Volts Amps	High Efficiency Fans 120 Volts Watts	Anti-Condensate Heaters 120 Volts Amps	Anti-Condensate Heaters 120 Volts Watts	Defrost Heaters 208 Volts Amps	Defrost Heaters 208 Volts Watts	Defrost Heaters 240 Volts Amps	Defrost Heaters 240 Volts Watts
O5DMH	4′	2	1.00	60	0.47	28	- - -[1]	- - -	1.92	400	2.22	532
	6′	3	1.50	90	0.70	42	- - -	- - -	2.88	600	3.33	798
	8′	4	2.00	120	0.93	56	- - -	- - -	3.85	800	4.44	1065
	12′	5	2.50	150	1.17	70	- - -	- - -	5.77	1200	6.67	1600

[1] NOTE: - - - not an option on this case model.

Lighting Data

Model		Bulbs per Row	Bulb Length	Typical per Light Row 120 Volts Amps	Typical per Light Row 120 Volts Watts	Maximum Lighting 120 Volts Amps	Maximum Lighting 120 Volts Watts
O5DMH	4′	1	4′	0.23	28	2.10	252
	6′	2	3′	0.37	44	3.30	396
	8′	2	4′	0.47	56	4.20	504
	12′	3	4′	0.70	84	6.30	756

Guidelines & Control Settings

Model	Front Sill Heights	BTUH/ft[2]	Coil Type	Evaporator (°F)	Superheat Set Point @ Bulb (°F)	Discharge Air (°F)	Return Air (°F)	Discharge Air Velocity[4] (FPM)
O5DMH Deli w/ Shelf Lights	2.5″ Ext.	1620[3]	Enh.	22	6-8	31	43	250
	5″ Ext.	1570[3]	Enh.	22	6-8	31	43	250
	7.5″ Ext.	1540[3]	Enh.	22	6-8	31	43	250
O5DMH Dairy Cut Produce w/ Shelf Lights	Std. Dairy	1555[3]	Enh.	26	6-8	35	47	265
	2.5″ Ext.	1500[3]	Enh.	26	6-8	35	47	265
	5″ Ext.	1470[3]	Enh.	26	6-8	35	47	265
	7.5″ Ext.	1440[3]	Enh.	26	6-8	35	47	265
O5DMH Beverage Bulk Produce w/o Shelf Lights	Std. Dairy	1495[3]	Enh.	29	6-8	37	52	270
	2.5″ Ext.	1455[3]	Enh.	29	6-8	36	53	270
	5″ Ext.	1426[3]	Enh.	29	6-8	36	52	270
	7.5″ Ext.	1397[3]	Enh.	29	6-8	36	52	270

[2] BTUHs/ft listed are for parallel operation. Conventional ratings may be approximated by multiplying listed rating by 1.04.

[3] High efficiency fans reduce refrigeration load by 96 BTUHs/fan.

[4] Average discharge air velocity at peak of defrost.

Defrost Controls

Model	Defrosts Per Day	Run-Off Time (min)	Electric Defrost Fail-safe (min)	Electric Defrost Termination Temp. (°F)	Timed Off Defrost Fail-safe (min)	Timed Off Defrost Termination Temp. (°F)	Hot Gas Defrost Fail-safe (min)	Hot Gas Defrost Termination Temp. (°F)	Reverse Air Defrost Fail-safe (min)	Reverse Air Defrost Termination Temp. (°F)
O5DMH	4	6 - 8	32	47	42	47	26	45	42	45

Medium Temperature Defrost Schedule

No. Per Day	Hours
1	12 midnight
2	12 am - 12 pm
3	6 am - 2 pm - 10 pm
4	12 - 6 am - 12 - 6 pm

All measurements are taken per ARI 1200 - 2002 specifications.

NSF COMPONENT

c UL us

Hill PHOENIX EXCELLENCE

A DOVER COMPANY

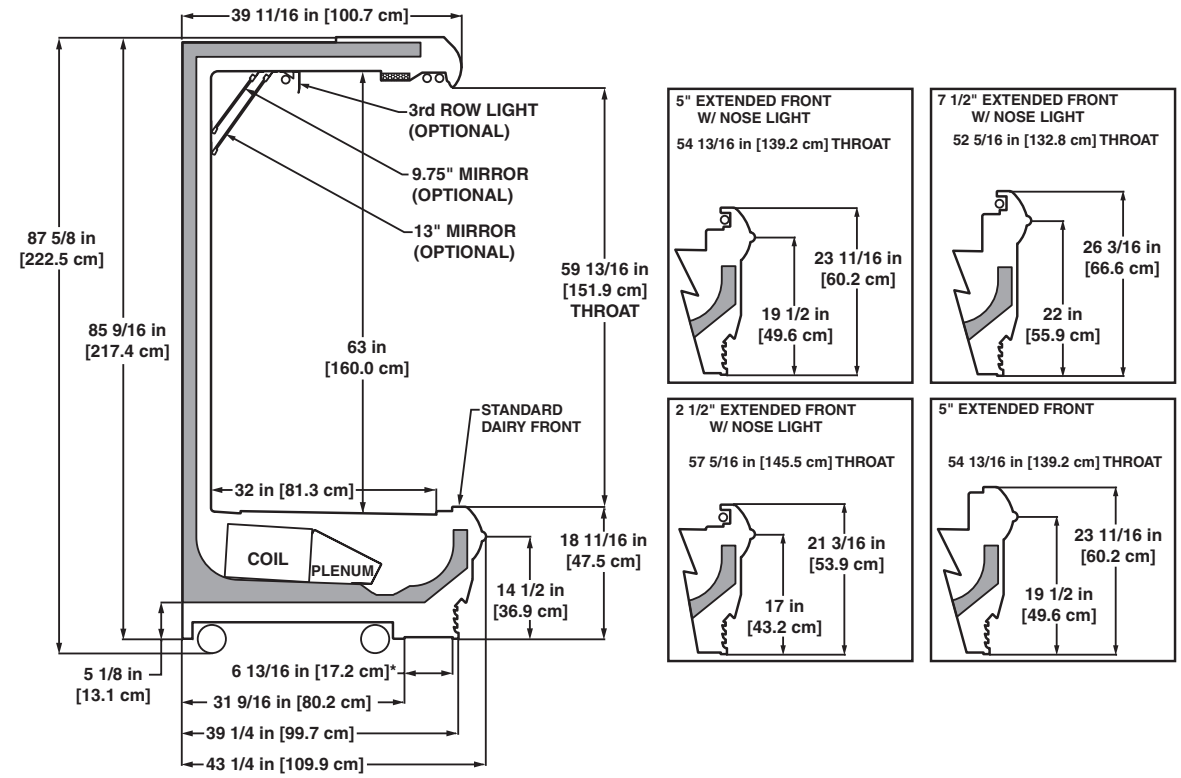

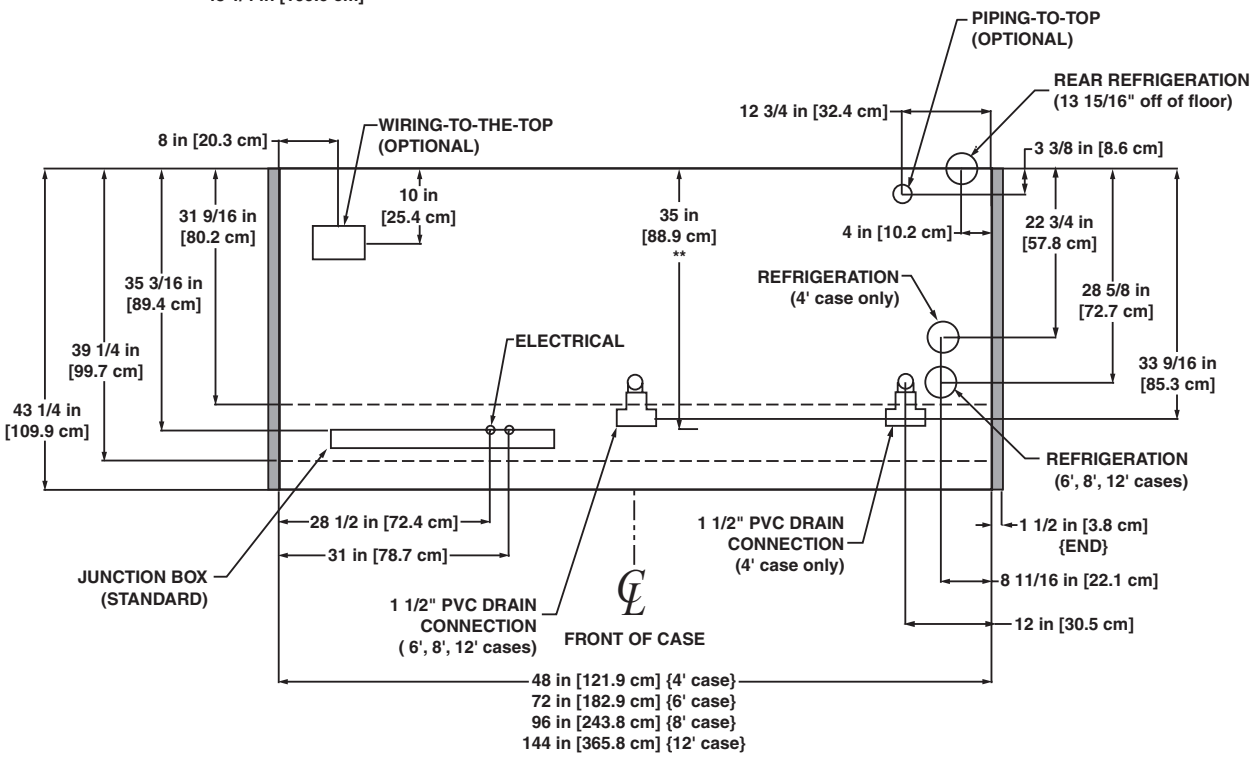

NOTES:

* STUB-UP AREA
** RECOMMENDED STUB-UP CENTERLINE FOR ELECTRICAL AND HUB DRAINS

- FRONT SILL HEIGHT AND OVERALL CASE HEIGHT VARYS WITH BASEFRAME HEIGHT
- ENDS ADD APPROXIMATELY 1 INCH TO CASE HEIGHT
- WIRING-TO-THE-TOP ADDS APPROXIMATELY 1 INCH TO CASE HEIGHT
- A 2" MINIMUM AIR GAP IS REQUIRED BETWEEN THE REAR OF THE CASE AND A WALL
- SUCTION LINE (4' & 6') - 5/8", SUCTION LINE (8' & 12') - 7/8", LIQUID LINE (ALL LENGTHS) - 3/8"
- AVAILABLE SHELF SIZES: 10", 12", 14", 16", 18", 20", 22" & 24"

Multi-Deck Rear Load Dairy Merchandiser

O5DR - 8′ & 12′

Electrical Data

Model		Fans per Case	Standard Fan 120 Volts Amps	Standard Fan 120 Volts Watts	High Efficiency Fans 120 Volts Amps	High Efficiency Fans 120 Volts Watts	Anti-Condensate Heaters 120 Volts Amps	Anti-Condensate Heaters 120 Volts Watts	Defrost Heaters 208 Volts Amps	Defrost Heaters 208 Volts Watts	Defrost Heaters 240 Volts Amps	Defrost Heaters 240 Volts Watts
O5DR	8′	4	3.20	213	1.44	142	- - -[1]	- - -	3.85	800	4.44	1065
	12′	5	4.00	267	1.80	178	- - -	- - -	5.78	1200	6.67	1600

[1] NOTE: - - - not an option on this case model.

Lighting Data

Model		Bulbs per Row	Bulb Length	Typical per Light Row 120 Volts Amps	Typical per Light Row 120 Volts Watts	Maximum Lighting 120 Volts Amps	Maximum Lighting 120 Volts Watts
O5DR	8′	2	4′	0.47	56	4.20	504
	12′	3	4′	0.70	84	6.30	756

Guidelines & Control Settings

Model	Front Sill Heights	BTUH/ft[2]	Coil Type	Evaporator (°F)	Superheat Set Point @ Bulb (°F)	Discharge Air (°F)	Return Air (°F)	Discharge Air Velocity[4] (FPM)
O5DR Dairy	Std. Dairy	1502[3]	Enh.	22	6-8	32	47	275
	2.5″ Ext.	1502[3]	Enh.	22	6-8	32	46	275
	5″ Ext.	1453[3]	Enh.	22	6-8	32	42	275
	7.5″ Ext.	1425[3]	Enh.	22	6-8	32	42	275
O5DR Beverage	2.5″ Ext.	1422[3]	Enh.	26	6-8	35	48	275
	5″ Ext.	1389[3]	Enh.	26	6-8	35	47	275

[2] BTUHs/ft listed are for parallel operation. Conventional ratings may be approximated by multiplying listed rating by 1.04.

[3] High efficiency fans reduce refrigeration load by 96 BTUHs/fan.

[4] Average discharge air velocity at peak of defrost.

Defrost Controls

Model	Defrosts Per Day	Run-Off Time (min)	Electric Defrost Fail-safe (min)	Electric Defrost Termination Temp. (°F)	Timed Off Defrost Fail-safe (min)	Timed Off Defrost Termination Temp. (°F)	Hot Gas Defrost Fail-safe (min)	Hot Gas Defrost Termination Temp. (°F)	Reverse Air Defrost Fail-safe (min)	Reverse Air Defrost Termination Temp. (°F)
O5DR	4	6 - 8	32	47	45	47	26	45	42	45

Medium Temperature Defrost Schedule

No. Per Day	Hours
1	12 midnight
2	12 am - 12 pm
3	6 am - 2 pm - 10 pm
4	12 - 6 am - 12 - 6 pm

All measurements are taken per ARI 1200 - 2002 specifications.

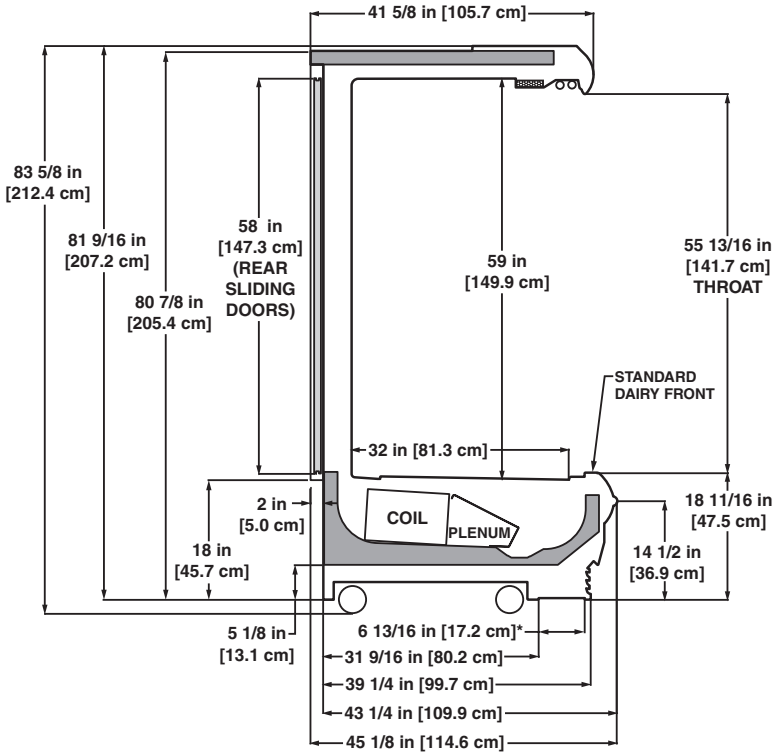

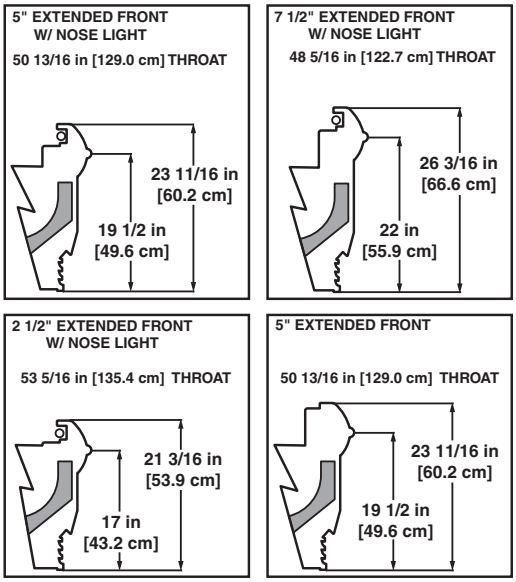

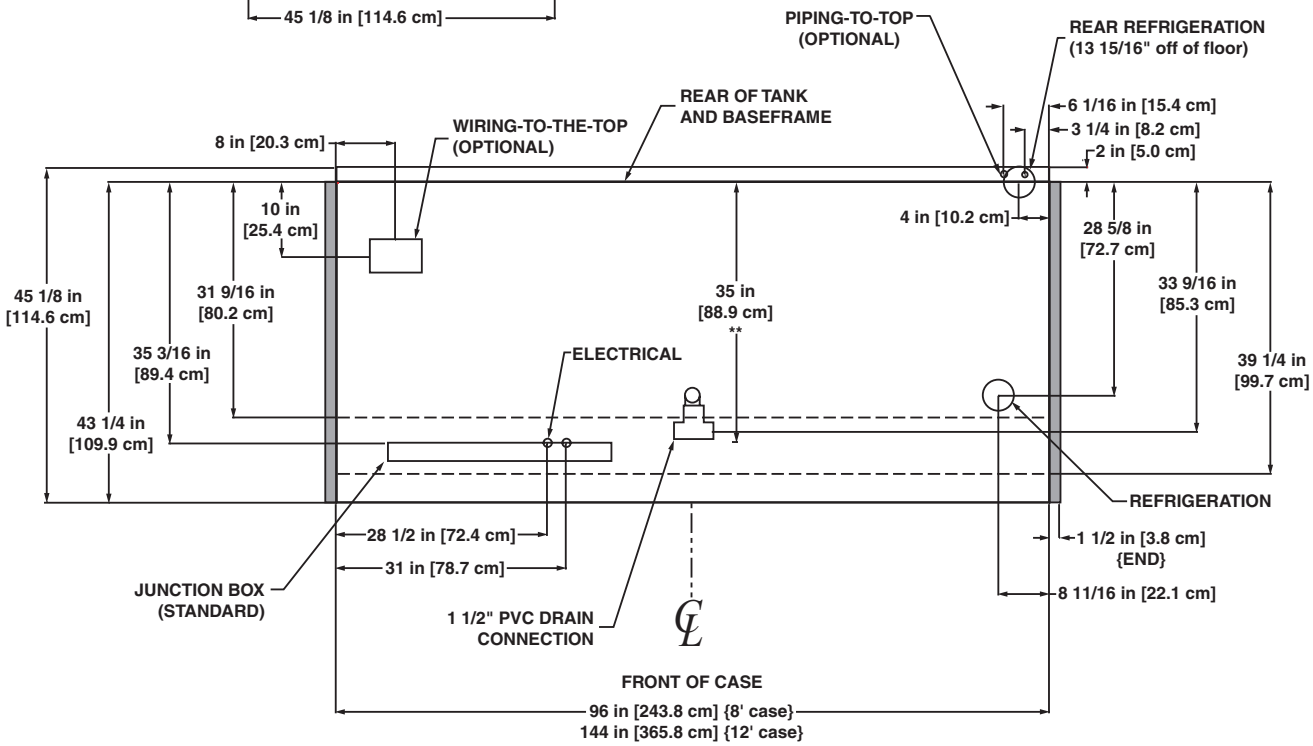

NOTES:

* STUB-UP AREA
** RECOMMENDED STUB-UP CENTERLINE FOR ELECTRICAL AND HUB DRAINS

- FRONT SILL HEIGHT AND OVERALL CASE HEIGHT VARYS WITH BASEFRAME HEIGHT
- ENDS ADD APPROXIMATELY 1 INCH TO CASE HEIGHT
- WIRING-TO-THE-TOP ADDS APPROXIMATELY 1 INCH TO CASE HEIGHT
- COOLER OPENING SHOULD BE 82" X CASE LENGTH
- SUCTION LINE - 7/8", LIQUID LINE - 3/8"
- AVAILABLE SHELF SIZES: 10", 12", 14", 16", 18", 20", 22" & 24"

NSF COMPONENT c UL us

A DOVER COMPANY

High Multi-Deck Rear Load Dairy Merchandiser

O5DRH - 8′ & 12′

Electrical Data

Model		Fans per Case	Standard Fan 120 Volts Amps	Standard Fan 120 Volts Watts	High Efficiency Fans 120 Volts Amps	High Efficiency Fans 120 Volts Watts	Anti-Condensate Heaters 120 Volts Amps	Anti-Condensate Heaters 120 Volts Watts	Defrost Heaters 208 Volts Amps	Defrost Heaters 208 Volts Watts	Defrost Heaters 240 Volts Amps	Defrost Heaters 240 Volts Watts
O5DRH	8′	4	3.20	213	1.44	142	- - -[1]	- - -	3.85	800	4.44	1065
	12′	5	4.00	267	1.80	178	- - -	- - -	5.78	1200	6.67	1600

[1] NOTE: - - - not an option on this case model.

Lighting Data

Model		Bulbs per Row	Bulb Length	Typical per Light Row 120 Volts Amps	Typical per Light Row 120 Volts Watts	Maximum Lighting 120 Volts Amps	Maximum Lighting 120 Volts Watts
O5DRH	8′	2	4′	0.47	56	4.20	504
	12′	3	4′	0.70	84	6.30	756

Guidelines & Control Settings

Model	Front Sill Heights	BTUH/ft[2]	Coil Type	Evaporator (°F)	Superheat Set Point @ Bulb (°F)	Discharge Air (°F)	Return Air (°F)	Discharge Air Velocity[4] (FPM)
O5DRH Dairy	Std. Dairy	1543[3]	Enh.	22	6-8	32	47	275
	2.5″ Ext.	1543[3]	Enh.	22	6-8	32	46	275
	5″ Ext.	1493[3]	Enh.	22	6-8	32	42	275
	7.5″ Ext.	1464[3]	Enh.	22	6-8	32	42	275
O5DRH Beverage	2.5″ Ext.	1461[3]	Enh.	26	6-8	35	48	275
	5″ Ext.	1427[3]	Enh.	26	6-8	35	47	275

[2] BTUHs/ft listed are for parallel operation. Conventional ratings may be approximated by multiplying listed rating by 1.04.

[3] High efficiency fans reduce refrigeration load by 96 BTUHs/fan.

[4] Average discharge air velocity at peak of defrost.

Defrost Controls

Model	Defrosts Per Day	Run-Off Time (min)	Electric Defrost Fail-safe (min)	Electric Defrost Termination Temp. (°F)	Timed Off Defrost Fail-safe (min)	Timed Off Defrost Termination Temp. (°F)	Hot Gas Defrost Fail-safe (min)	Hot Gas Defrost Termination Temp. (°F)	Reverse Air Defrost Fail-safe (min)	Reverse Air Defrost Termination Temp. (°F)
O5DRH	4	6 - 8	32	47	45	47	26	45	42	45

Medium Temperature Defrost Schedule

No. Per Day	Hours
1	12 midnight
2	12 am - 12 pm
3	6 am - 2 pm - 10 pm
4	12 - 6 am - 12 - 6 pm

All measurements are taken per ARI 1200 - 2002 specifications.

NSF COMPONENT

c UL us

Hill PHOENIX EXCELLENCE

A DOVER COMPANY

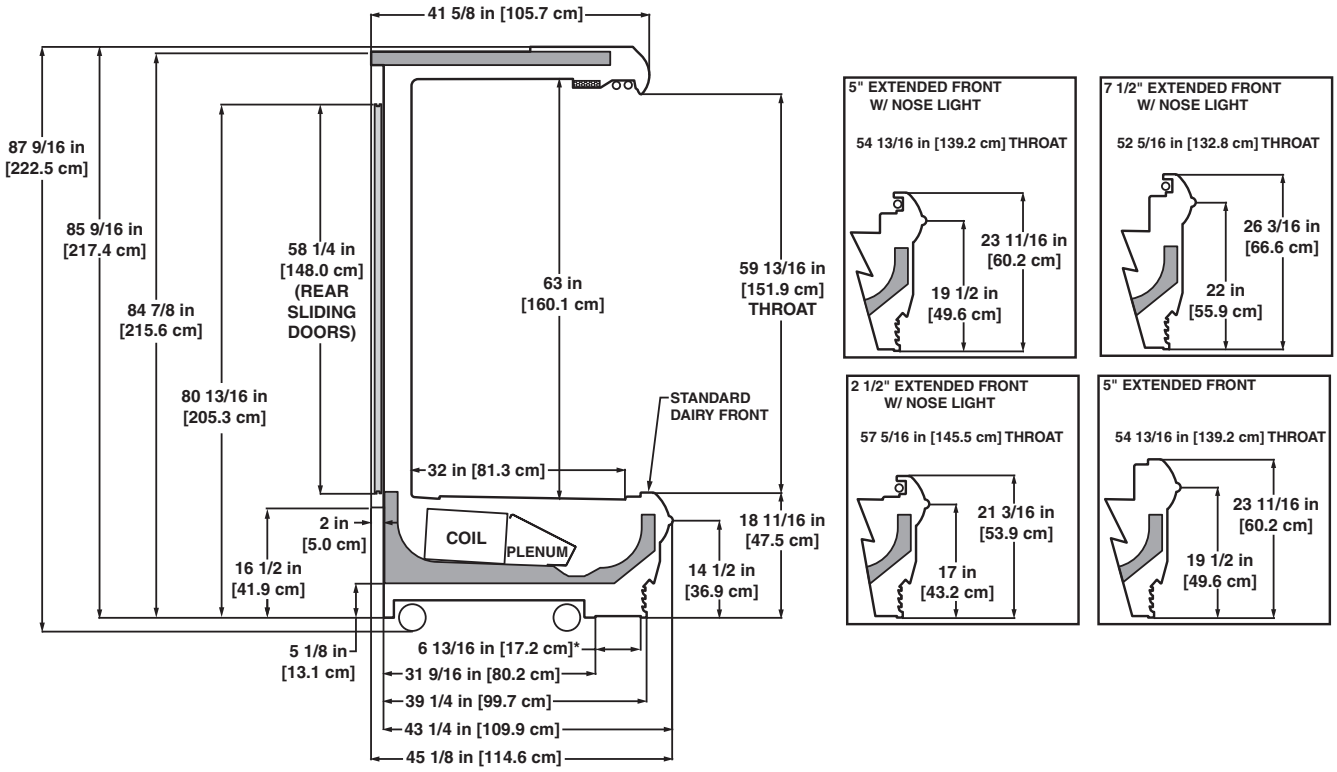

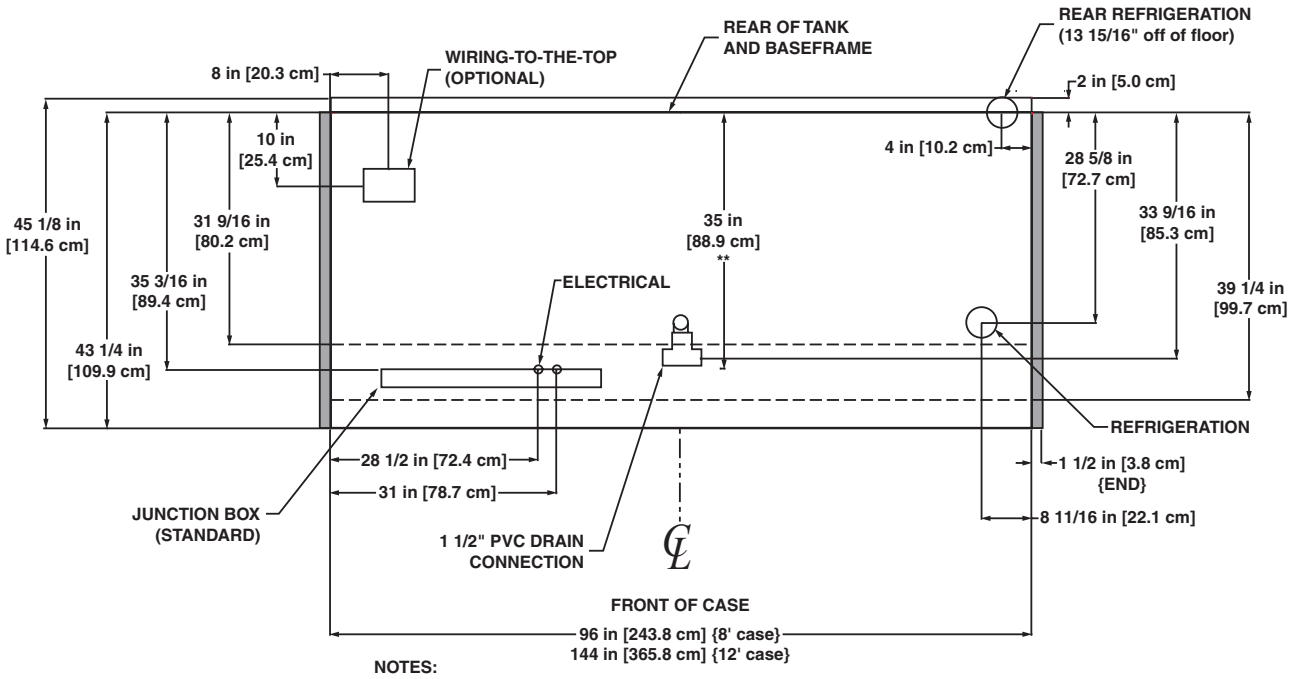

NOTES:

* STUB-UP AREA
** RECOMMENDED STUB-UP CENTERLINE FOR ELECTRICAL AND HUB DRAINS

- FRONT SILL HEIGHT AND OVERALL CASE HEIGHT VARYS WITH BASEFRAME HEIGHT
- ENDS ADD APPROXIMATELY 1 INCH TO CASE HEIGHT
- WIRING-TO-THE-TOP ADDS APPROXIMATELY 1 INCH TO CASE HEIGHT
- COOLER OPENING SHOULD BE 86" X CASE LENGTH
- SUCTION LINE - 7/8", LIQUID LINE - 3/8"
- AVAILABLE SHELF SIZES: 10", 12", 14", 16", 18", 20", 22" & 24"

Multi-Deck Deli/Meat Merchandiser

O5M - 4′, 6′, 8′ & 12′

Electrical Data

Model		Fans per Case	High Efficiency Fans 120 Volts Amps	High Efficiency Fans 120 Volts Watts	Anti-Condensate Heaters 120 Volts Amps	Anti-Condensate Heaters 120 Volts Watts	Defrost Heaters 208 Volts Amps	Defrost Heaters 208 Volts Watts	Defrost Heaters 240 Volts Amps	Defrost Heaters 240 Volts Watts
O5M	4′	2	0.47	28	- - -[1]	- - -	1.92	400	2.22	532
	6′	2	0.47	28	- - -	- - -	2.88	600	3.33	798
	8′	3	0.70	42	- - -	- - -	3.85	800	4.44	1065
	12′	4	0.93	56	- - -	- - -	5.77	1200	6.67	1600

[1] NOTE: - - - not an option on this case model.

Lighting Data

Model		Bulbs per Row	Bulb Length	Typical per Light Row 120 Volts Amps	Typical per Light Row 120 Volts Watts	Maximum Lighting 120 Volts Amps	Maximum Lighting 120 Volts Watts
O5M	4′	1	4′	0.23	28	1.15	138
	6′	2	3′	0.37	44	1.85	222
	8′	2	4′	0.47	56	2.35	282
	12′	3	4′	0.70	84	3.50	420

Guidelines & Control Settings

Model	Application	Front Sill Height	BTUH/ft[2]	Coil Type	Evaporator (°F)	Superheat Set Point @ Bulb (°F)	Discharge Air (°F)	Return Air (°F)	Discharge Air Velocity[3] (FPM)
O5M	Fresh Meat	21 inch	1830	Enh.	17	6-8	26	38	225

[2] BTUHs/ft listed are for parallel operation. Conventional ratings may be approximated by multiplying listed rating by 1.04.

[3] Average discharge air velocity at peak of defrost.

Defrost Controls

Model	Defrosts Per Day	Run-Off Time (min)	Electric Defrost Fail-safe (min)	Electric Defrost Termination Temp. (°F)	Timed Off Defrost Fail-safe (min)	Timed Off Defrost Termination Temp. (°F)	Hot Gas Defrost Fail-safe (min)	Hot Gas Defrost Termination Temp. (°F)	Reverse Air Defrost Fail-safe (min)	Reverse Air Defrost Termination Temp. (°F)
O5M	6	6 - 8	40	47	45	45	26	45	45	45

All measurements are taken per ARI 1200 - 2002 specifications.

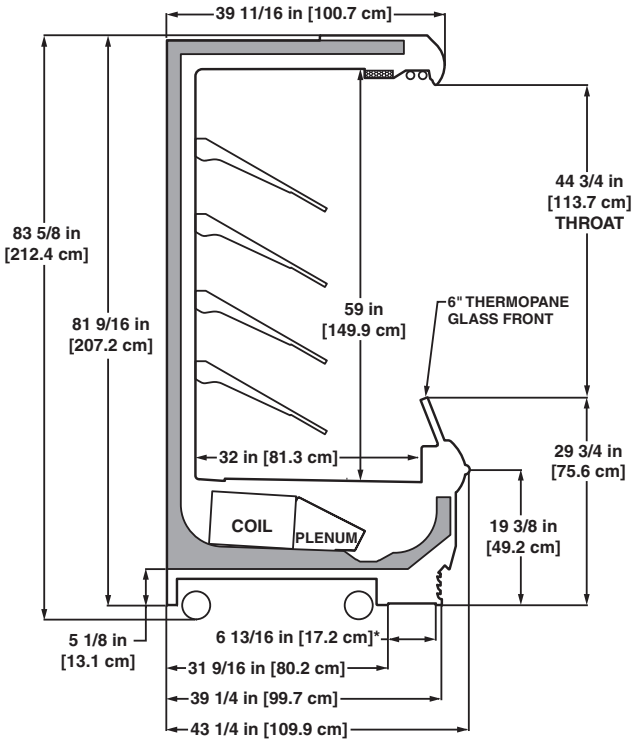

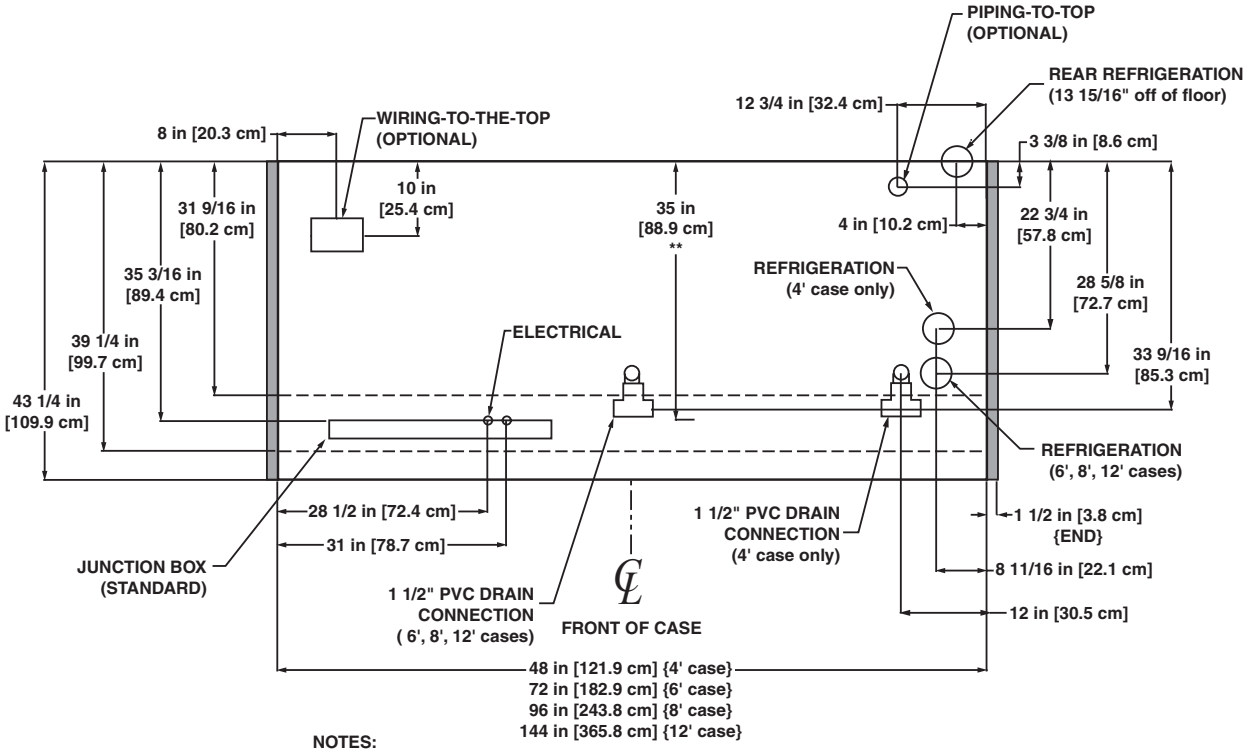

NOTES:

* STUB-UP AREA
** RECOMMENDED STUB-UP CENTERLINE FOR ELECTRICAL AND HUB DRAINS

- FRONT SILL HEIGHT AND OVERALL CASE HEIGHT VARYS WITH BASEFRAME HEIGHT
- ENDS ADD APPROXIMATELY 1 INCH TO CASE HEIGHT
- WIRING-TO-THE-TOP ADDS APPROXIMATELY 1 INCH TO CASE HEIGHT
- A 2" MINIMUM AIR GAP IS REQUIRED BETWEEN THE REAR OF THE CASE AND A WALL
- BACK PANELS ADD APPROXIMATELY 1" TO THE REAR OF THE CASE
- SUCTION LINE (4' & 6') - 5/8", SUCTION LINE (8' & 12') - 7/8", LIQUID LINE (ALL LENGTHS) - 3/8"
- AVAILABLE SHELF SIZES: 18" & 20" ARTICULATED ONLY (4 ROWS RECOMMENDED)

Multi-Deck Rear Load Deli/Meat Merchandiser

O5MR - 8′ & 12′

Electrical Data

Model		Fans per Case	High Efficiency Fans		Anti-Condensate Heaters		Defrost Heaters			
			120 Volts		120 Volts		208 Volts		240 Volts	
			Amps	Watts	Amps	Watts	Amps	Watts	Amps	Watts
O5MR	8′	4	1.44	142	- - -[1]	- - -	3.85	800	4.44	1065
	12′	5	1.80	178	- - -	- - -	5.78	1200	6.67	1600

[1] NOTE: - - - not an option on this case model.

Lighting Data

Model		Bulbs per Row	Bulb Length	Typical per Light Row		Maximum Lighting	
				120 Volts		120 Volts	
				Amps	Watts	Amps	Watts
O5MR	8′	2	4′	0.47	56	2.35	282
	12′	3	4′	0.70	84	3.50	420

Guidelines & Control Settings

Model	Application	Front Sill Height	BTUH/ft[2]	Coil Type	Evaporator (°F)	Superheat Set Point @ Bulb (°F)	Discharge Air (°F)	Return Air (°F)	Discharge Air Velocity[3] (FPM)
O5MR	Fresh Meat	Thermopane	1667	Enh.	17	6-8	31	40	275

[2] BTUHs/ft listed are for parallel operation. Conventional ratings may be approximated by multiplying listed rating by 1.04.

[3] Average discharge air velocity at peak of defrost.

Defrost Controls

Model	Defrosts Per Day	Run-Off Time (min)	Electric Defrost		Timed Off Defrost		Hot Gas Defrost		Reverse Air Defrost	
			Fail-safe (min)	Termination Temp. (°F)	Fail-safe (min)	Termination Temp. (°F)	Fail-safe (min)	Termination Temp. (°F)	Fail-safe (min)	Termination Temp. (°F)
O5MR	6	6 - 8	40	47	45	45	26	45	45	45

Medium Temperature Defrost Schedule

No. Per Day	Hours
1	12 midnight
2	12 am - 12 pm
3	6 am - 2 pm - 10 pm
4	12 - 6 am - 12 - 6 pm

All measurements are taken per ARI 1200 - 2002 specifications.

6/07

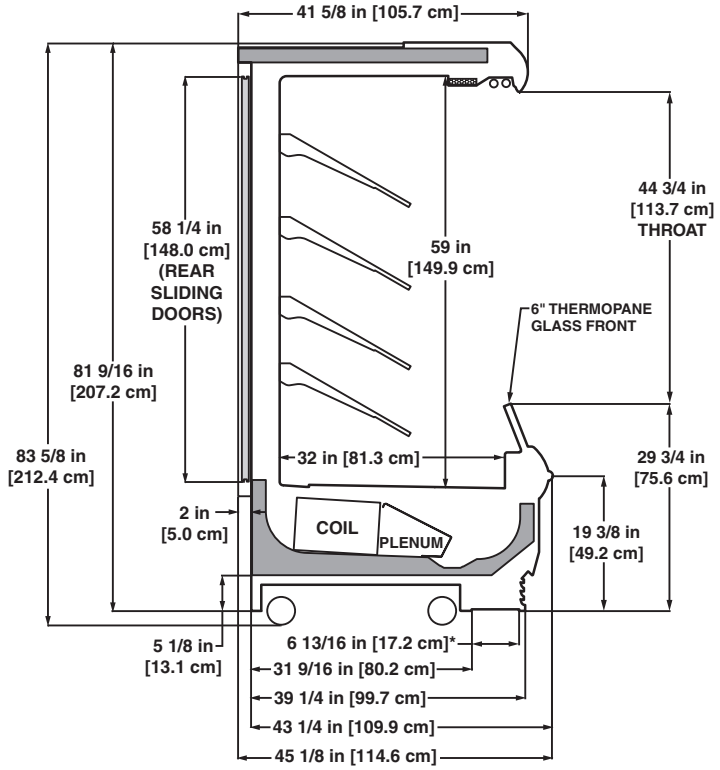

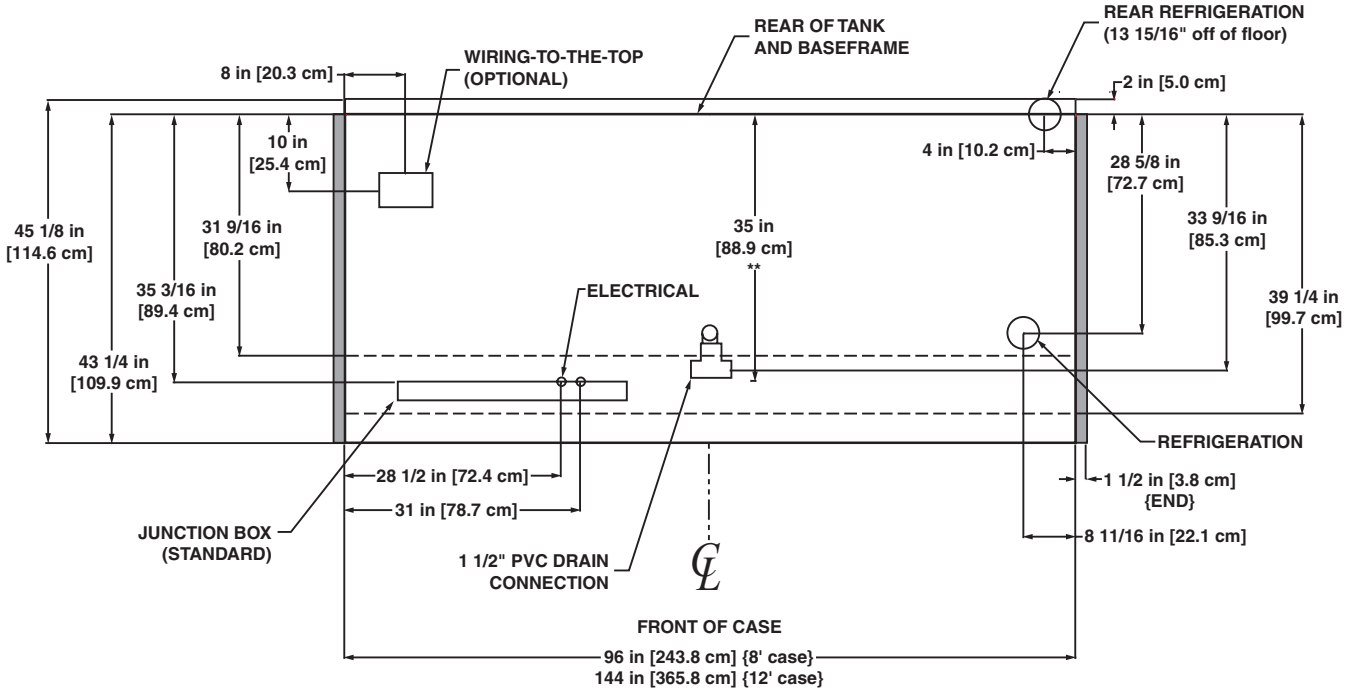

NOTES:

* STUB-UP AREA
** RECOMMENDED STUB-UP CENTERLINE FOR ELECTRICAL AND HUB DRAINS

- FRONT SILL HEIGHT AND OVERALL CASE HEIGHT VARYS WITH BASEFRAME HEIGHT
- ENDS ADD APPROXIMATELY 1 INCH TO CASE HEIGHT
- WIRING-TO-THE-TOP ADDS APPROXIMATELY 1 INCH TO CASE HEIGHT
- SUCTION LINE - 7/8", LIQUID LINE - 3/8"
- AVAILABLE SHELF SIZES: 18" & 20" ARTICULATED ONLY (4 ROWS RECOMMENDED)

Multi-Deck Frozen Food Merchandiser

O5Z - 6′, 8′ & 12′

Electrical Data

Model		Fans per Case				Standard Fans 120 Volts		High Efficiency Fans 120 Volts		Anti-Condensate Heaters 120 Volts		Defrost Heaters 208 Volts		Defrost Heaters 240 Volts	
		Pri.[1]	Sec.	Amb.	Total	Amps	Watts	Amps	Watts	Amps	Watts	Amps	Watts	Amps	Watts
O5Z	6′	4	2	2	8	4.56	280	2.04	187	2.25[2]	270	9.99[3]	3600	11.53[3]	4794
	8′	5	3	2	10	5.70	352	2.55	233	3.10[2]	344	13.32[3]	4800	15.37[3]	6390
	12′	7	4	3	14	7.98	490	3.57	327	4.68[2]	562	20.00[3]	7200	23.06[3]	9585

[1] Pri.=Primary, Sec.=Secondary, Amb.=Ambient
[2] Cases equipped with windowed ends add 1.85 amps per end.
[3] 3 phase load. Figure given is maximum amps per phase.

Lighting Data

Model		Bulbs per Row	Bulb Length	Typical per Light Row 120 Volts Amps	Typical per Light Row 120 Volts Watts	Maximum Lighting 120 Volts Amps	Maximum Lighting 120 Volts Watts
O5Z	6′	2	3′	0.37	44	1.10	132
	8′	2	4′	0.47	56	1.40	168
	12′	3	4′	0.70	84	2.10	252

Guidelines & Control Settings

Model	BTUH/ft[4]	Evaporator (°F)	Superheat Set Point @ Bulb (°F)	Discharge Air (°F)	Return Air (°F)	Discharge Air Velocity[5] (FPM) Pri.	Sec.	Amb.
O5Z	1840	-17	3-5	-5	0	650	425	275

[4] BTUHs/ft listed are for parallel operation. Conventional ratings may be approximated by multiplying listed rating by 1.04.
[5] Average discharge air velocity at peak of defrost.

Defrost Controls

Model	Defrosts Per Day	Run-Off Time (min)	Electric Defrost Fail-safe (min)	Electric Defrost Termination Temp. (°F)	Timed Off Defrost Fail-safe (min)	Timed Off Defrost Termination Temp. (°F)	Hot Gas Defrost Fail-safe (min)	Hot Gas Defrost Termination Temp. (°F)	Reverse Air Defrost Fail-safe (min)	Reverse Air Defrost Termination Temp. (°F)
O5Z	3	13 - 15	34	50	- - -[6]	- - -	24	60	- - -	- - -

[6] NOTE: --- not an option on this case model.

Low Temperature Defrost Schedule

No. Per Day	Hours
1	10 pm
2	6 am - 10 pm**

All measurements are taken per ARI 1200 - 2002 specifications.

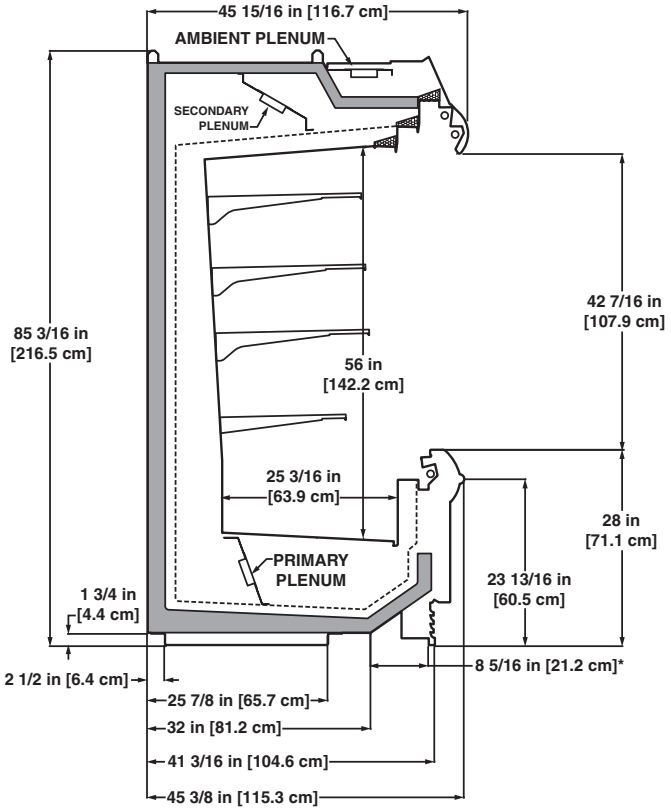

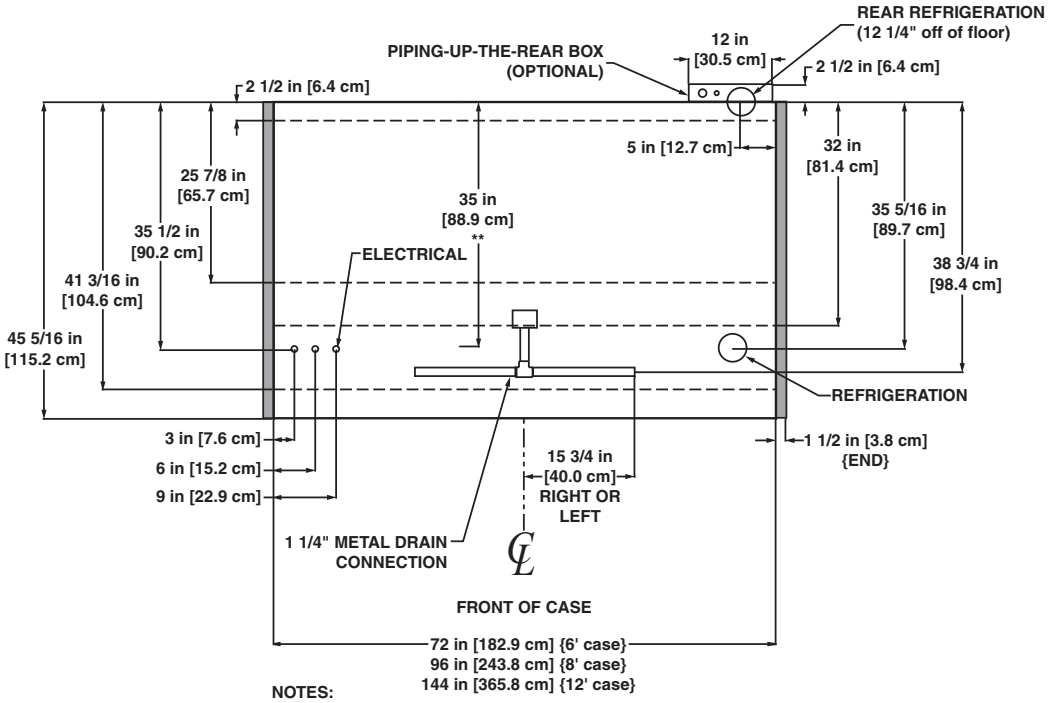

NOTES:

* STUB-UP AREA
** RECOMMENDED STUB-UP CENTERLINE FOR ELECTRICAL AND HUB DRAINS

- ENDS ADD APPROXIMATELY 1 INCH TO CASE HEIGHT
- A 2" MINIMUM AIR GAP IS REQUIRED BETWEEN THE REAR OF THE CASE AND A WALL
- SUCTION LINE - 1 1/8", LIQUID LINE - 5/8"
- AVAILABLE SHELF SIZES: 18" & 22"

(RECOMMENDED CONFIGURATION IS 3 - 22" SHELVES ON TOP AND 1 - 18" SHELF ON THE BOTTOM)

NSF COMPONENT c UL us

A DOVER COMPANY

Narrow Multi-Deck Deli/Meat Merchandiser

ONHM - 4′, 6′, 8′ & 12′

Electrical Data

Model		Fans per Case	Standard Fans 120 Volts Amps	Standard Fans 120 Volts Watts	High Efficiency Fans 120 Volts Amps	High Efficiency Fans 120 Volts Watts	Anti-Condensate Heaters[1] 120 Volts Amps	Anti-Condensate Heaters[1] 120 Volts Watts	Defrost Heaters 208 Volts Amps	Defrost Heaters 208 Volts Watts	Defrost Heaters 240 Volts Amps	Defrost Heaters 240 Volts Watts
ONHM	4′	2	1.00	60	0.47	28	- - -[1]	- - -	1.92	400	2.22	532
	6′	3	1.50	90	0.70	42	- - -	- - -	2.88	600	3.33	798
	8′	4	2.00	120	0.93	56	- - -	- - -	3.85	800	4.44	1065
	12′	5	2.50	150	1.17	70	- - -	- - -	5.77	1200	6.67	1600

[1] NOTE: --- not an option on this case model.

Lighting Data

Model		Bulbs per Row	Bulb Length	Typical per Light Row 120 Volts Amps	Typical per Light Row 120 Volts Watts	Maximum Lighting 120 Volts Amps	Maximum Lighting 120 Volts Watts
ONHM	4′	1	4′	0.23	28	1.63	196
	6′	2	3′	0.37	44	2.57	308
	8′	2	4′	0.47	56	3.27	392
	12′	3	4′	0.70	84	4.90	588

Guidelines & Control Settings

Model	Front Sill Heights	BTUH/ft[2]	Coil Type	Evaporator (°F)	Superheat Set Point @ Bulb (°F)	Discharge Air (°F)	Return Air (°F)	Discharge Air Velocity[4] (FPM)
ONHM	Standard	1440[3]	Enh.	22	6-8	30	41	340
	All Others	1340[3]	Enh.	22	6-8	30	41	340

[2] BTUHs/ft listed are for parallel operation. Conventional ratings may be approximated by multiplying listed rating by 1.04.

[3] High efficiency fans reduce refrigeration load by 96 BTUHs/fan.

[4] Average discharge air velocity at peak of defrost.

Defrost Controls

Model	Defrosts Per Day	Run-Off Time (min)	Electric Defrost Fail-safe (min)	Electric Defrost Termination Temp. (°F)	Timed Off Defrost Fail-safe (min)	Timed Off Defrost Termination Temp. (°F)	Hot Gas Defrost Fail-safe (min)	Hot Gas Defrost Termination Temp. (°F)	Reverse Air Defrost Fail-safe (min)	Reverse Air Defrost Termination Temp. (°F)
ONHM	4	6 - 8	35	47	45	47	26	45	45	45

Medium Temperature Defrost Schedule

No. Per Day	Hours
1	12 midnight
2	12 am - 12 pm
3	6 am - 2 pm - 10 pm
4	12 - 6 am - 12 - 6 pm

All measurements are taken per ARI 1200 - 2002 specifications.

NSF COMPONENT

c UL us

Hill PHOENIX EXCELLENCE

A DOVER COMPANY

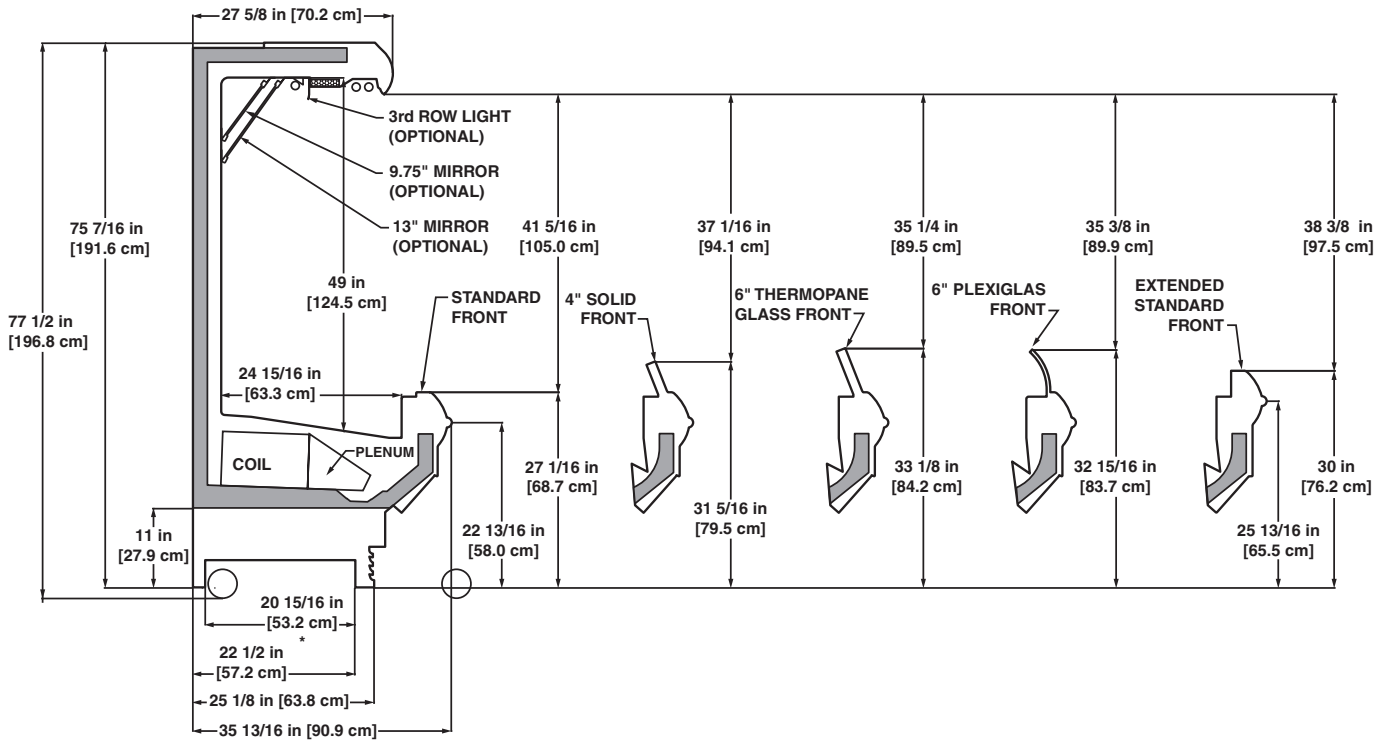

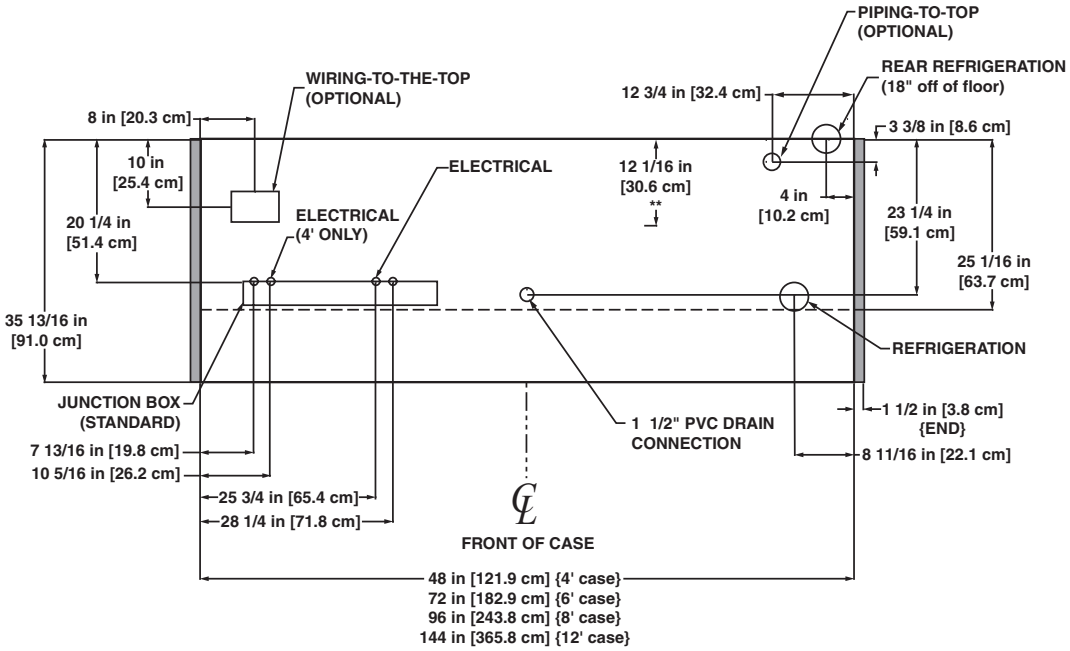

NOTES:

* STUB-UP AREA
** RECOMMENDED STUB-UP CENTERLINE FOR ELECTRICAL AND HUB DRAINS

- FRONT SILL HEIGHT AND OVERALL CASE HEIGHT VARYS WITH BASEFRAME HEIGHT
- ENDS ADD APPROXIMATELY 1 INCH TO CASE HEIGHT
- WIRING-TO-THE-TOP ADDS APPROXIMATELY 1 INCH TO CASE HEIGHT
- A 2" MINIMUM AIR GAP IS REQUIRED BETWEEN THE REAR OF THE CASE AND A WALL
- SUCTION LINE (4' & 6') - 5/8", SUCTION LINE (8' & 12') - 7/8", LIQUID LINE (ALL LENGTHS) - 3/8"
- AVAILABLE SHELF SIZES: 10", 12", 14", 16", 18" & 20"
- RECOMMENDED SHELF CONFIGURATION IN ROWS: 1-12", 1-14", 1-16" & 1-18"

High Narrow Multi-Deck Deli/Meat Merchandiser

ONHMH - 4′, 6′, 8′ & 12′

Electrical Data

Model		Fans per Case	Standard Fans 120 Volts Amps	Standard Fans 120 Volts Watts	High Efficiency Fans 120 Volts Amps	High Efficiency Fans 120 Volts Watts	Anti-Condensate Heaters[1] 120 Volts Amps	Anti-Condensate Heaters[1] 120 Volts Watts	Defrost Heaters 208 Volts Amps	Defrost Heaters 208 Volts Watts	Defrost Heaters 240 Volts Amps	Defrost Heaters 240 Volts Watts
ONHMH	4′	2	1.00	60	0.47	28	- - -[1]	- - -	1.92	400	2.22	532
	6′	3	1.50	90	0.70	42	- - -	- - -	2.88	600	3.33	798
	8′	4	2.00	120	0.93	56	- - -	- - -	3.85	800	4.44	1065
	12′	5	2.50	150	1.17	70	- - -	- - -	5.77	1200	6.67	1600

[1] NOTE: --- not an option on this case model.

Lighting Data

Model		Bulbs per Row	Bulb Length	Typical per Light Row 120 Volts Amps	Typical per Light Row 120 Volts Watts	Maximum Lighting 120 Volts Amps	Maximum Lighting 120 Volts Watts
ONHMH	4′	1	4′	0.23	28	1.87	224
	6′	2	3′	0.37	44	2.93	352
	8′	2	4′	0.47	56	3.73	448
	12′	3	4′	0.70	84	5.60	672

Guidelines & Control Settings

Model	Front Sill Heights	BTUH/ft[2]	Coil Type	Evaporator (°F)	Superheat Set Point @ Bulb (°F)	Discharge Air (°F)	Return Air (°F)	Discharge Air Velocity[4] (FPM)
ONHMH	Standard	1440[3]	Enh.	22	6-8	30	41	340
	All Others	1340[3]	Enh.	22	6-8	29	40	340

[2] BTUHs/ft listed are for parallel operation. Conventional ratings may be approximated by multiplying listed rating by 1.04.

[3] High efficiency fans reduce refrigeration load by 96 BTUHs/fan.

[4] Average discharge air velocity at peak of defrost.

Defrost Controls

Model	Defrosts Per Day	Run-Off Time (min)	Electric Defrost Fail-safe (min)	Electric Defrost Termination Temp. (°F)	Timed Off Defrost Fail-safe (min)	Timed Off Defrost Termination Temp. (°F)	Hot Gas Defrost Fail-safe (min)	Hot Gas Defrost Termination Temp. (°F)	Reverse Air Defrost Fail-safe (min)	Reverse Air Defrost Termination Temp. (°F)
ONHMH	4	6 - 8	35	47	45	47	26	45	45	45

Medium Temperature Defrost Schedule

No. Per Day	Hours
1	12 midnight
2	12 am - 12 pm
3	6 am - 2 pm - 10 pm
4	12 - 6 am - 12 - 6 pm

All measurements are taken per ARI 1200 - 2002 specifications.

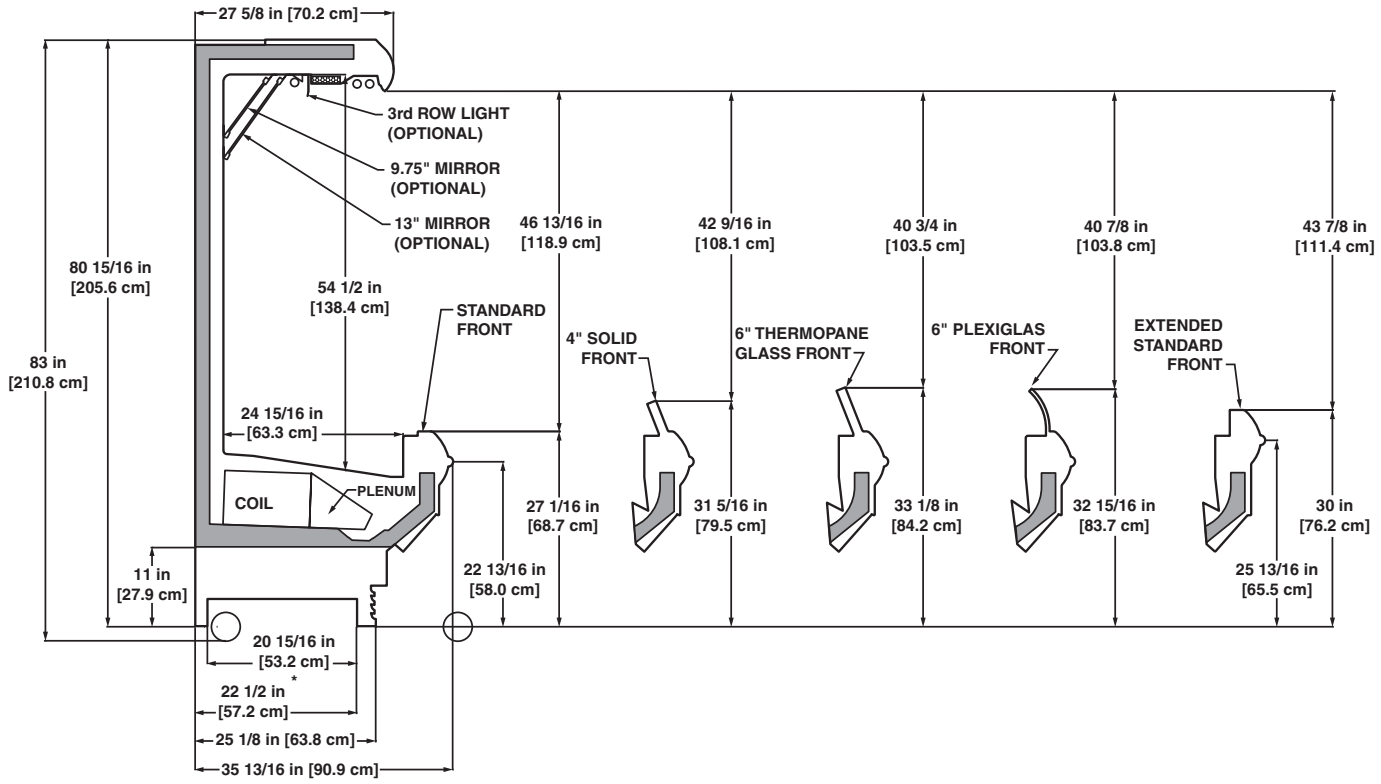

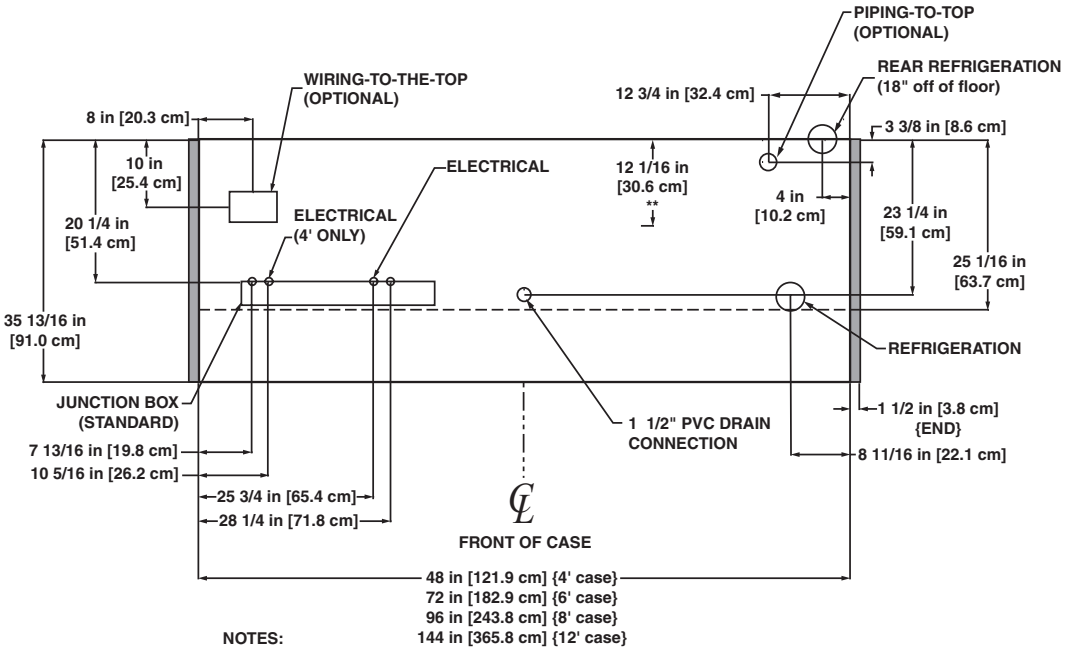

NOTES:

* STUB-UP AREA
** RECOMMENDED STUB-UP CENTERLINE FOR ELECTRICAL AND HUB DRAINS

- FRONT SILL HEIGHT AND OVERALL CASE HEIGHT VARYS WITH BASEFRAME HEIGHT
- ENDS ADD APPROXIMATELY 1 INCH TO CASE HEIGHT
- WIRING-TO-THE-TOP ADDS APPROXIMATELY 1 INCH TO CASE HEIGHT
- A 2" MINIMUM AIR GAP IS REQUIRED BETWEEN THE REAR OF THE CASE AND A WALL
- SUCTION LINE (4' & 6') - 5/8", SUCTION LINE (8' & 12') - 7/8", LIQUID LINE (ALL LENGTHS) - 3/8"
- AVAILABLE SHELF SIZES: 10", 12", 14", 16", 18" & 20"
- RECOMMENDED SHELF CONFIGURATION IN ROWS: 1-12", 1-14", 1-16", 1-18" & 1-20"

Multi-Deck Deli/Meat Merchandiser

OHM - 6′, 8′ & 12′

Electrical Data

Model		Fans per Case	Standard Fans 120 Volts Amps	Standard Fans 120 Volts Watts	High Efficiency Fans 120 Volts Amps	High Efficiency Fans 120 Volts Watts	Anti-Condensate Heaters 120 Volts Amps	Anti-Condensate Heaters 120 Volts Watts	Defrost Heaters 208 Volts Amps	Defrost Heaters 208 Volts Watts	Defrost Heaters 240 Volts Amps	Defrost Heaters 240 Volts Watts
OHM	6′	2	1.00	60	0.39	23.4	- - -[1]	- - -	2.88	600	3.33	798
	8′	3	1.50	90	0.59	35.1	- - -	- - -	3.85	800	4.44	1065
	12′	4	2.00	120	0.78	46.8	- - -	- - -	5.77	1200	6.67	1600

[1] NOTE: --- not an option on this case model.

Lighting Data

Model		Bulbs per Row	Bulb Length	Typical per Light Row 120 Volts Amps	Typical per Light Row 120 Volts Watts	Maximum Lighting 120 Volts Amps	Maximum Lighting 120 Volts Watts
OHM	6′	2	3′	0.37	44	2.57	308
	8′	2	4′	0.47	56	3.27	392
	12′	3	4′	0.70	84	4.90	588

Guidelines & Control Settings

Model	Front Sill Heights	BTUH/ft[2]	Coil Type	Evaporator (°F)	Superheat Set Point @ Bulb (°F)	Discharge Air (°F)	Return Air (°F)	Discharge Air Velocity[4] (FPM)
OHM	Standard	1385[3]	Enh.	22	6-8	28	38	350
	All Others	1341[3]	Enh.	22	6-8	28	37	350

[2] BTUHs/ft listed are for parallel operation. Conventional ratings may be approximated by multiplying listed rating by 1.04.

[3] High efficiency fans reduce refrigeration load by 96 BTUHs/fan.

[4] Average discharge air velocity at peak of defrost.

Defrost Controls

Model	Defrosts Per Day	Run-Off Time (min)	Electric Defrost Fail-safe (min)	Electric Defrost Termination Temp. (°F)	Timed Off Defrost Fail-safe (min)	Timed Off Defrost Termination Temp. (°F)	Hot Gas Defrost Fail-safe (min)	Hot Gas Defrost Termination Temp. (°F)	Reverse Air Defrost Fail-safe (min)	Reverse Air Defrost Termination Temp. (°F)
OHM	4	6 - 8	35	47	45	47	26	45	45	45

Medium Temperature Defrost Schedule

No. Per Day	Hours
1	12 midnight
2	12 am - 12 pm
3	6 am - 2 pm - 10 pm
4	12 - 6 am - 12 - 6 pm

All measurements are taken per ARI 1200 - 2002 specifications.

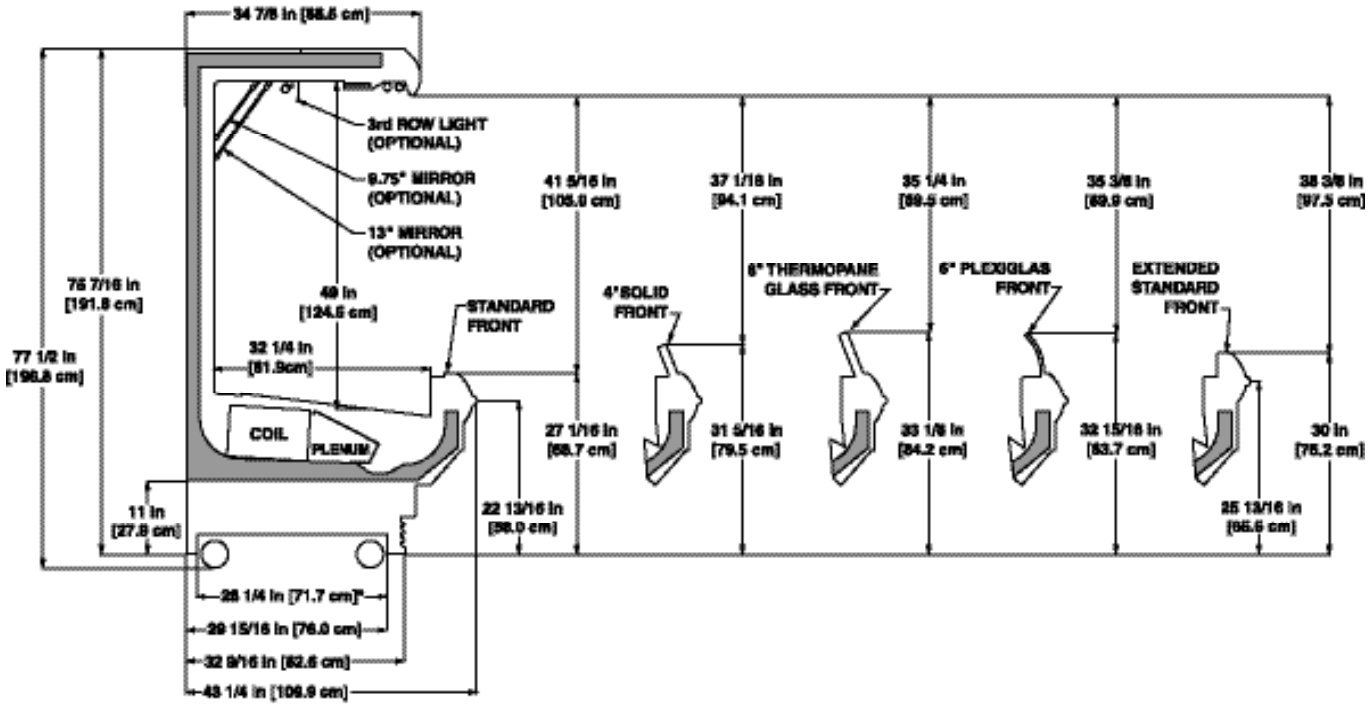

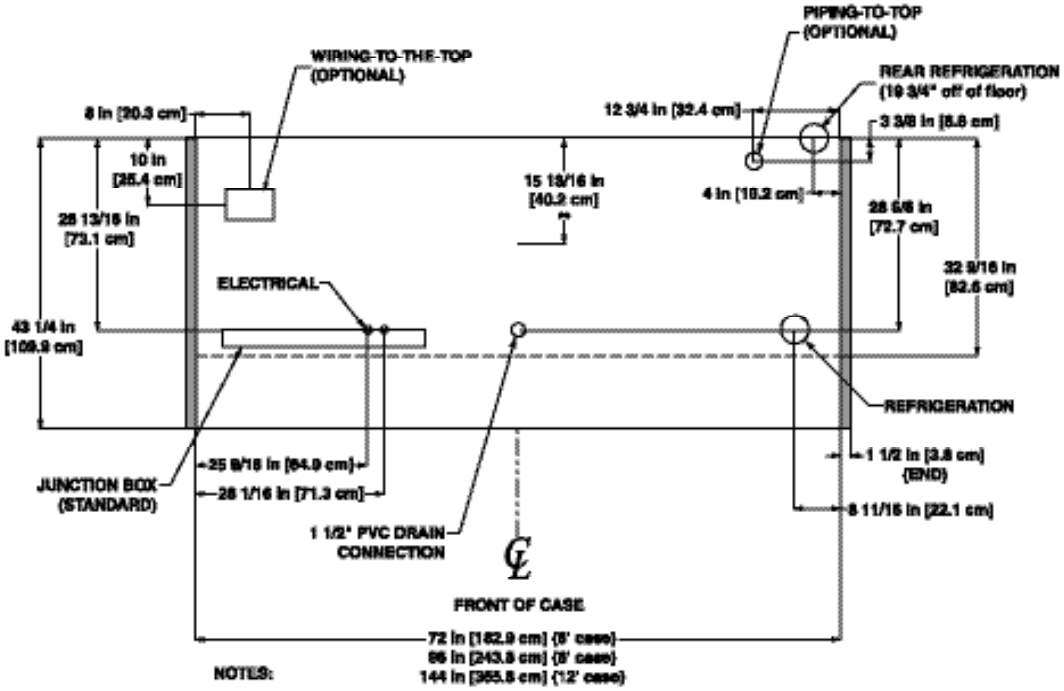

NOTES:

* STUB-UP AREA
** RECOMMENDED STUB-UP CENTERLINE FOR ELECTRICAL AND HUB DRAINS

- FRONT SILL HEIGHT AND OVERALL CASE HEIGHT VARYS WITH BASEFRAME HEIGHT
- ENDS ADD APPROXIMATELY 1 INCH TO CASE HEIGHT
- WIRING-TO-THE-TOP ADDS APPROXIMATELY 1 INCH TO CASE HEIGHT
- A 2" MINIMUM AIR GAP IS REQUIRED BETWEEN THE REAR OF THE CASE AND A WALL
- SUCTION LINE (6') - 5/8", SUCTION LINE (8' & 12') - 7/8", LIQUID LINE (ALL LENGTHS) - 3/8"
- AVAILABLE SHELF SIZES: 10", 12", 14", 16", 18" & 20"

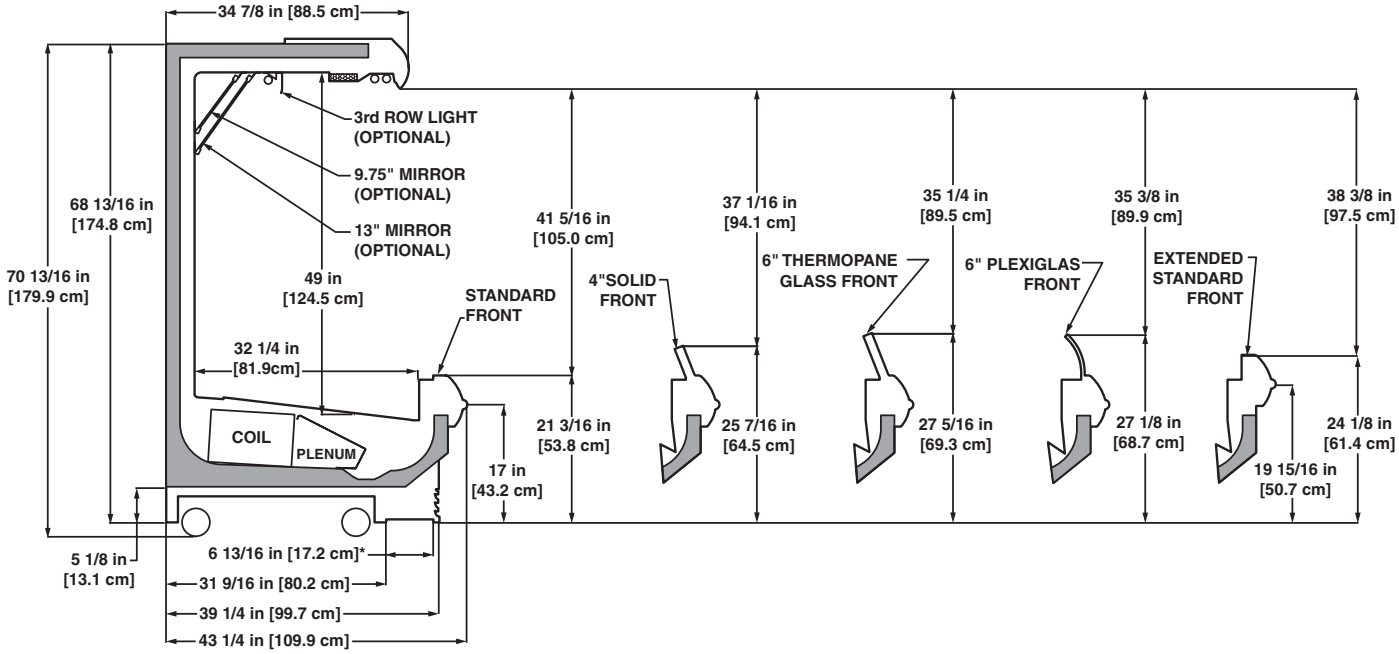

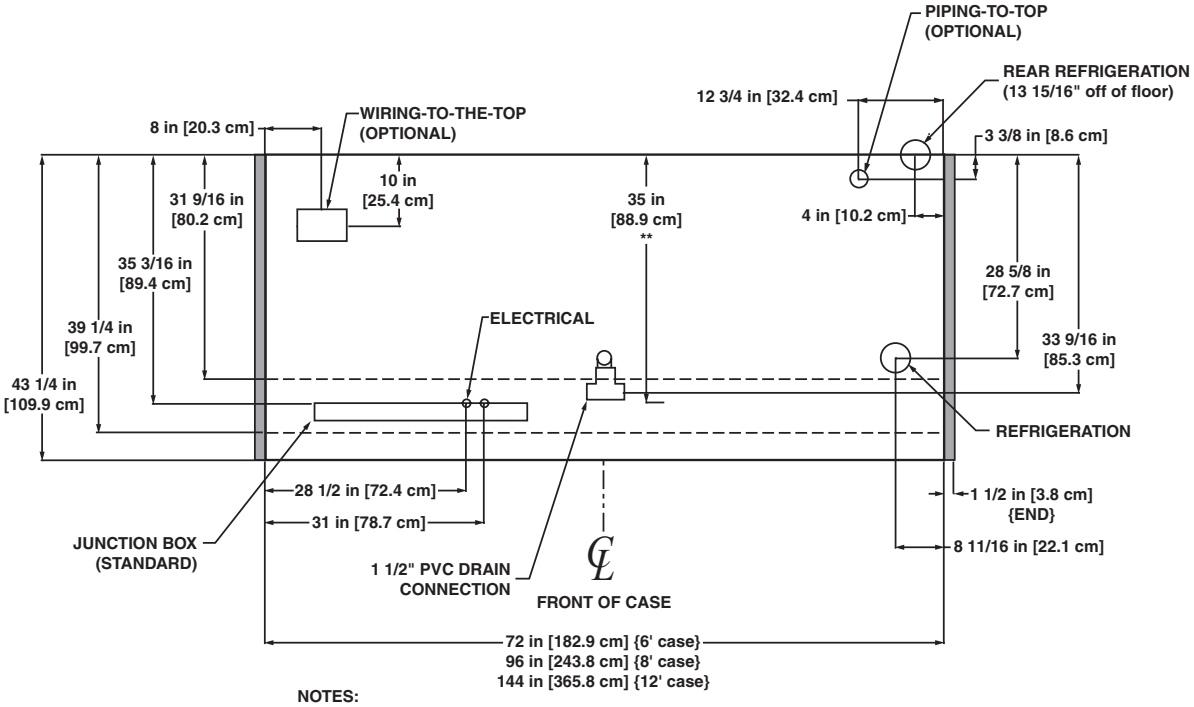

NOTES:

* STUB-UP AREA
** RECOMMENDED STUB-UP CENTERLINE FOR ELECTRICAL AND HUB DRAINS

- FRONT SILL HEIGHT AND OVERALL CASE HEIGHT VARYS WITH BASEFRAME HEIGHT
- ENDS ADD APPROXIMATELY 1 INCH TO CASE HEIGHT
- WIRING-TO-THE-TOP ADDS APPROXIMATELY 1 INCH TO CASE HEIGHT
- A 2" MINIMUM AIR GAP IS REQUIRED BETWEEN THE REAR OF THE CASE AND A WALL
- SUCTION LINE (6') - 5/8", SUCTION LINE (8' & 12') - 7/8", LIQUID LINE (ALL LENGTHS) - 3/8"
- AVAILABLE SHELF SIZES: 10", 12", 14", 16", 18" & 20

High Multi-Deck Deli/Meat Merchandiser

OHMH- 4′, 6′, 8′ & 12′

Electrical Data

Model		Fans per Case	Standard Fans 120 Volts Amps	Standard Fans 120 Volts Watts	High Efficiency Fans 120 Volts Amps	High Efficiency Fans 120 Volts Watts	Anti-Condensate Heaters 120 Volts Amps	Anti-Condensate Heaters 120 Volts Watts	Defrost Heaters 208 Volts Amps	Defrost Heaters 208 Volts Watts	Defrost Heaters 240 Volts Amps	Defrost Heaters 240 Volts Watts
OHMH	4′	2	1.00	60	0.47	28	- - -[1]	- - -	1.92	400	2.22	532
	6′	3	1.50	90	0.70	42	- - -	- - -	2.88	600	3.33	798
	8′	4	2.00	120	0.93	56	- - -	- - -	3.85	800	4.44	1065
	12′	5	2.50	150	1.17	70	- - -	- - -	5.77	1200	6.67	1600

[1] NOTE: --- not an option on this case model.

Lighting Data

Model		Bulbs per Row	Bulb Length	Typical per Light Row 120 Volts Amps	Typical per Light Row 120 Volts Watts	Maximum Lighting 120 Volts Amps	Maximum Lighting 120 Volts Watts
OHMH	4′	1	4′	0.23	28	1.87	224
	6′	2	3′	0.37	44	2.93	352
	8′	2	4′	0.47	56	3.73	448
	12′	3	4′	0.70	84	5.60	672

Guidelines & Control Settings

Model	Front Sill Heights	BTUH/ft[2]	Coil Type	Evaporator (°F)	Superheat Set Point @ Bulb (°F)	Discharge Air (°F)	Return Air (°F)	Discharge Air Velocity[4] (FPM)
OHMH	Standard	1434[3]	Enh.	22	6-8	29	41	330
	All Others	1340[3]	Enh.	22	6-8	29	38	330

[2] BTUHs/ft listed are for parallel operation. Conventional ratings may be approximated by multiplying listed rating by 1.04.

[3] High efficiency fans reduce refrigeration load by 96 BTUHs/fan.

[4] Average discharge air velocity at peak of defrost.

Defrost Controls

Model	Defrosts Per Day	Run-Off Time (min)	Electric Defrost Fail-safe (min)	Electric Defrost Termination Temp. (°F)	Timed Off Defrost Fail-safe (min)	Timed Off Defrost Termination Temp. (°F)	Hot Gas Defrost Fail-safe (min)	Hot Gas Defrost Termination Temp. (°F)	Reverse Air Defrost Fail-safe (min)	Reverse Air Defrost Termination Temp. (°F)
OHMH	4	6 - 8	35	47	45	47	26	45	45	45

Medium Temperature Defrost Schedule

No. Per Day	Hours
1	12 midnight
2	12 am - 12 pm
3	6 am - 2 pm - 10 pm
4	12 - 6 am - 12 - 6 pm

All measurements are taken per ARI 1200 - 2002 specifications.

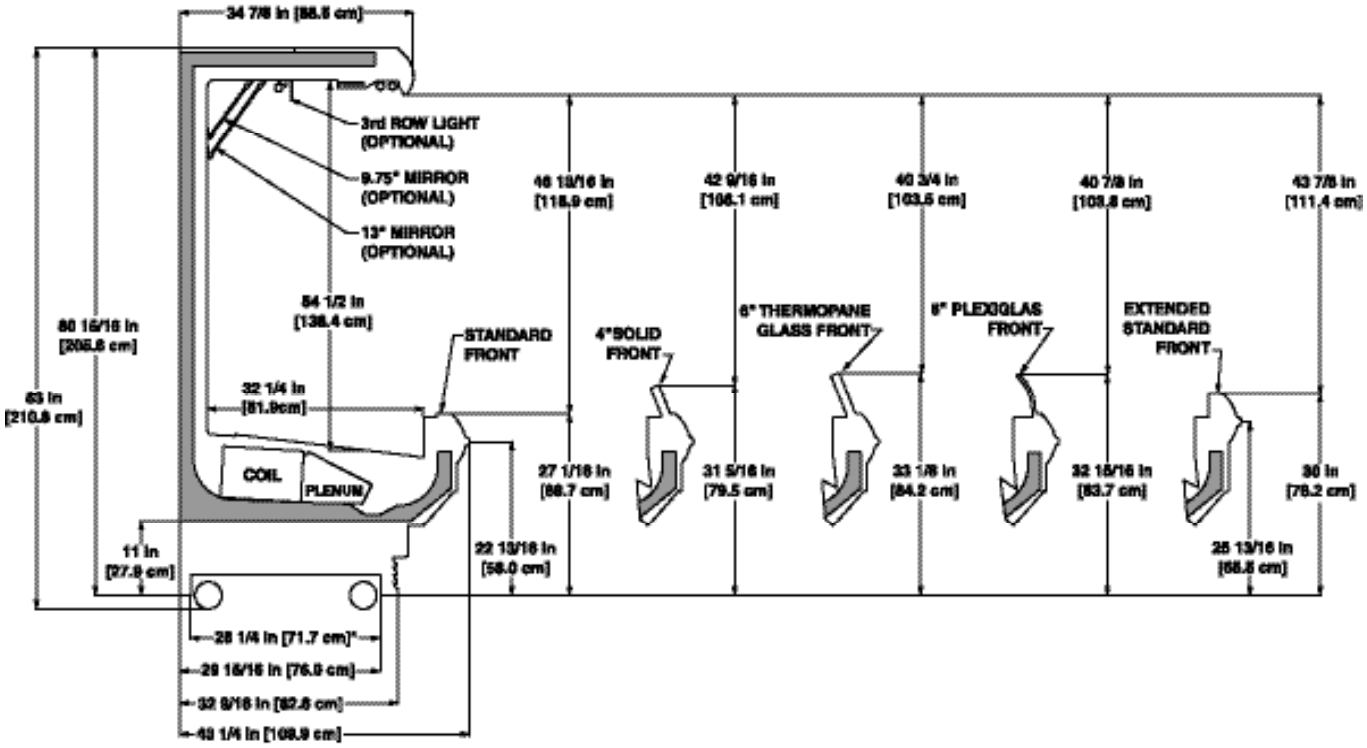

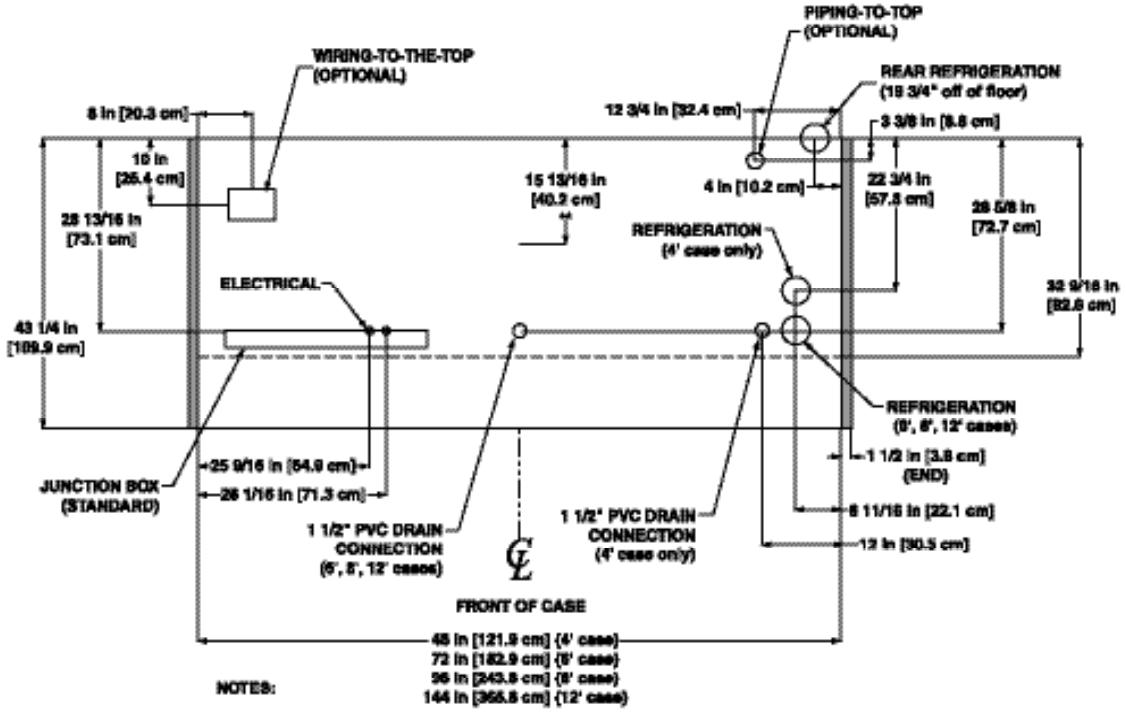

NOTES:

* STUB-UP AREA
** RECOMMENDED STUB-UP CENTERLINE FOR ELECTRICAL AND HUB DRAINS

- FRONT SILL HEIGHT AND OVERALL CASE HEIGHT VARYS WITH BASEFRAME HEIGHT
- ENDS ADD APPROXIMATELY 1 INCH TO CASE HEIGHT
- WIRING-TO-THE-TOP ADDS APPROXIMATELY 1 INCH TO CASE HEIGHT
- A 2" MINIMUM AIR GAP IS REQUIRED BETWEEN THE REAR OF THE CASE AND A WALL
- SUCTION LINE (4' & 6') - 5/8", SUCTION LINE (8' & 12') - 7/8", LIQUID LINE (ALL LENGTHS) - 3/8"
- AVAILABLE SHELF SIZES: 10", 12", 14", 16", 18" & 20"

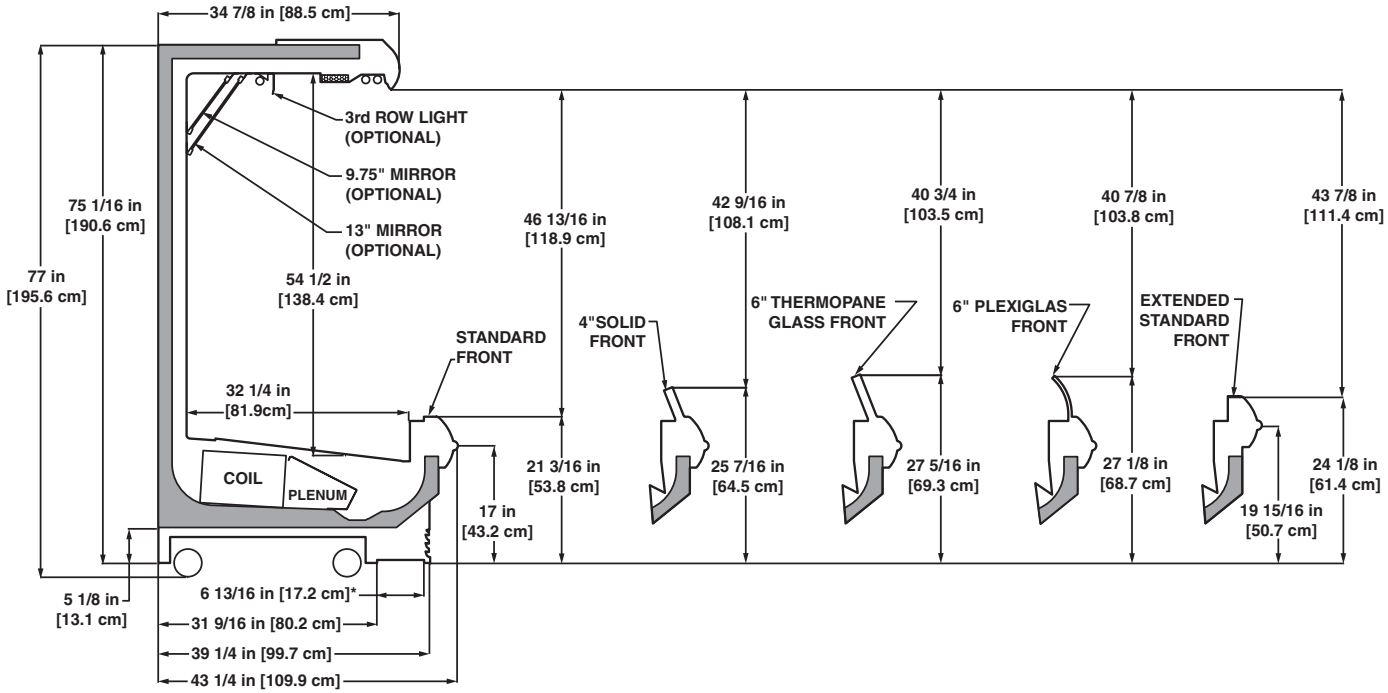

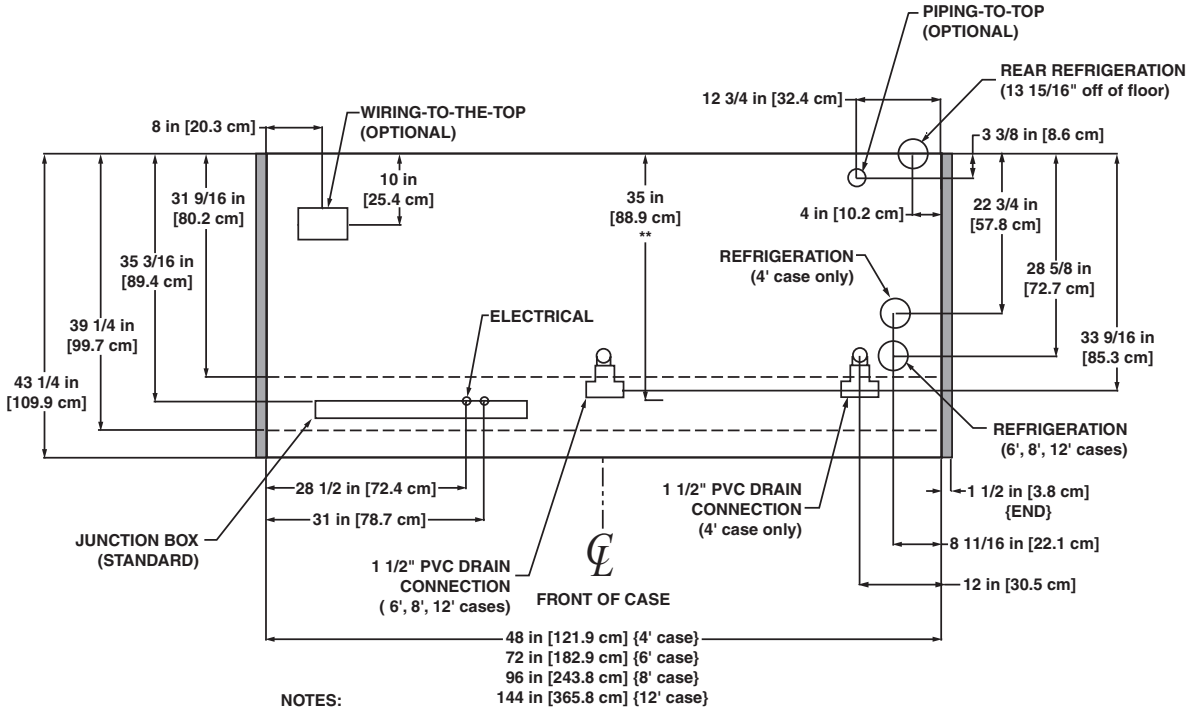

NOTES:

* STUB-UP AREA
** RECOMMENDED STUB-UP CENTERLINE FOR ELECTRICAL AND HUB DRAINS

- FRONT SILL HEIGHT AND OVERALL CASE HEIGHT VARYS WITH BASEFRAME HEIGHT
- ENDS ADD APPROXIMATELY 1 INCH TO CASE HEIGHT
- WIRING-TO-THE-TOP ADDS APPROXIMATELY 1 INCH TO CASE HEIGHT
- A 2" MINIMUM AIR GAP IS REQUIRED BETWEEN THE REAR OF THE CASE AND A WALL
- SUCTION LINE (4' & 6') - 5/8", SUCTION LINE (8' & 12') - 7/8", LIQUID LINE (ALL LENGTHS) - 3/8"
- AVAILABLE SHELF SIZES: 10", 12", 14", 16", 18" & 20

Narrow Multi-Deck Produce Merchandiser

ONHP - 4′, 6′, 8′ & 12′

Electrical Data

Model		Fans per Case	Standard Fans 120 Volts Amps	Standard Fans 120 Volts Watts	High Efficiency Fans 120 Volts Amps	High Efficiency Fans 120 Volts Watts	Anti-Condensate Heaters[1] 120 Volts Amps	Anti-Condensate Heaters[1] 120 Volts Watts	Defrost Heaters 208 Volts Amps	Defrost Heaters 208 Volts Watts	Defrost Heaters 240 Volts Amps	Defrost Heaters 240 Volts Watts
ONHP	4′	2	1.00	60	0.47	28	- - -[1]	- - -	1.92	400	2.22	532
	6′	2	1.00	60	0.47	28	- - -	- - -	2.88	600	3.33	798
	8′	3	1.50	90	0.70	42	- - -	- - -	3.85	800	4.44	1065
	12′	4	2.00	120	0.93	56	- - -	- - -	5.77	1200	6.67	1600

[1] NOTE: --- not an option on this case model.

Lighting Data

Model		Bulbs per Row	Bulb Length	Typical per Light Row 120 Volts Amps	Typical per Light Row 120 Volts Watts	Maximum Lighting 120 Volts Amps	Maximum Lighting 120 Volts Watts
ONHP	4′	1	4′	0.23	28	1.63	196
	6′	2	3′	0.37	44	2.57	308
	8′	2	4′	0.47	56	3.27	392
	12′	3	4′	0.70	84	4.90	588

Guidelines & Control Settings

Model	BTUH/ft[2]	Coil Type	Evaporator (°F)	Superheat Set Point @ Bulb (°F)	Discharge Air (°F)	Return Air (°F)	Discharge Air Velocity[4] (FPM)
ONHP Cut Produce	1310[3]	Enh.	26	6-8	32	45	350
ONHP Bulk Produce	930[3]	Enh.	29	6-8	36	48	250

[2] BTUHs/ft listed are for parallel operation. Conventional ratings may be approximated by multiplying listed rating by 1.04.

[3] High efficiency fans reduce refrigeration load by 96 BTUHs/fan.

[4] Average discharge air velocity at peak of defrost.

Defrost Controls

Model	Defrosts Per Day	Run-Off Time (min)	Electric Defrost Fail-safe (min)	Electric Defrost Termination Temp. (°F)	Timed Off Defrost Fail-safe (min)	Timed Off Defrost Termination Temp. (°F)	Hot Gas Defrost Fail-safe (min)	Hot Gas Defrost Termination Temp. (°F)	Reverse Air Defrost Fail-safe (min)	Reverse Air Defrost Termination Temp. (°F)
ONHP	3	6 - 8	35	47	45	47	- - -[5]	- - -	45	45

[5] NOTE: - - - not an option on this case model.

Medium Temperature Defrost Schedule

No. Per Day	Hours
1	12 midnight
2	12 am - 12 pm
3	6 am - 2 pm - 10 pm
4	12 - 6 am - 12 - 6 pm

All measurements are taken per ARI 1200 - 2002 specifications.

NSF COMPONENT

c UL us

Hill PHOENIX EXCELLENCE

A DOVER COMPANY

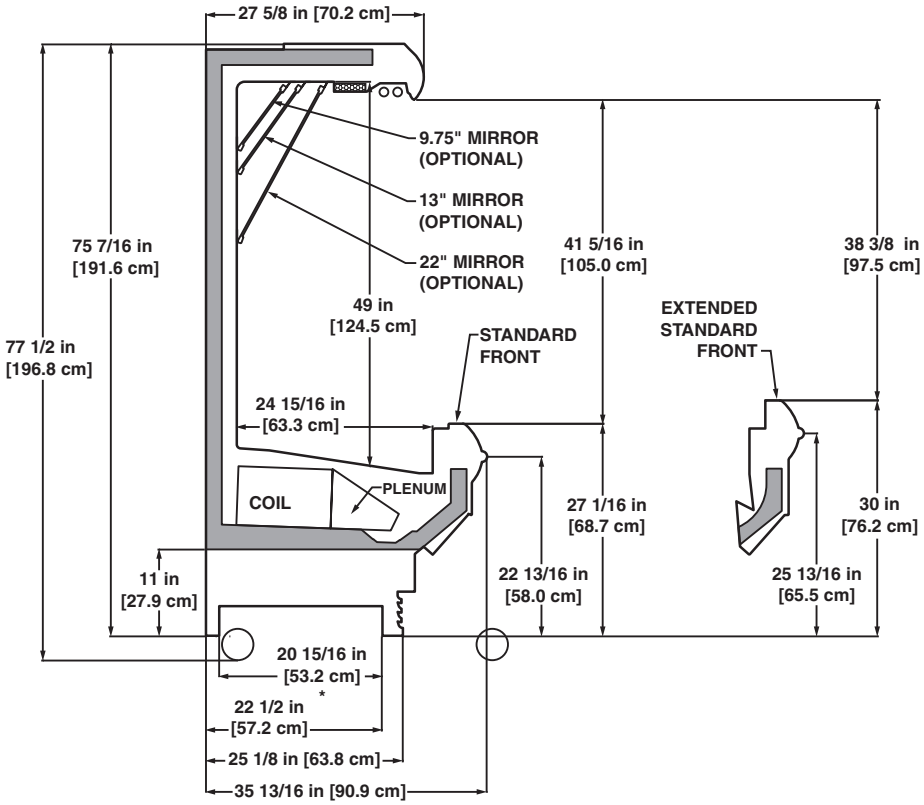

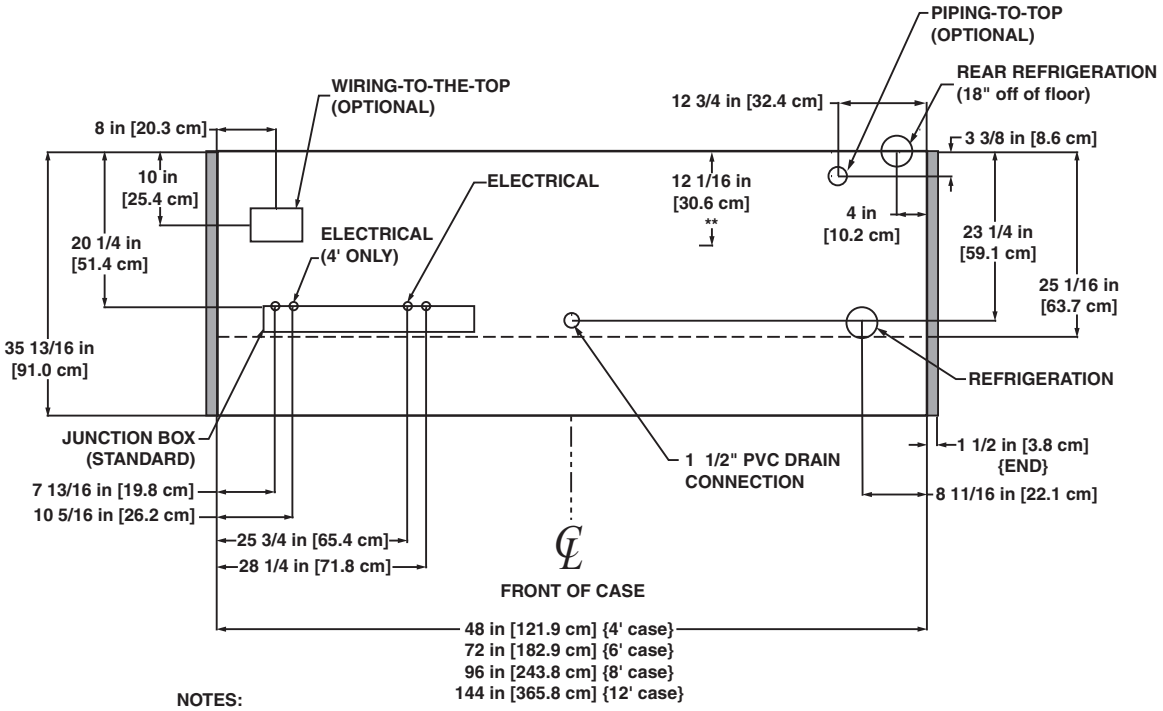

NOTES:

* STUB-UP AREA
** RECOMMENDED STUB-UP CENTERLINE FOR ELECTRICAL AND HUB DRAINS

- FRONT SILL HEIGHT AND OVERALL CASE HEIGHT VARYS WITH BASEFRAME HEIGHT
- ENDS ADD APPROXIMATELY 1 INCH TO CASE HEIGHT
- WIRING-TO-THE-TOP ADDS APPROXIMATELY 1 INCH TO CASE HEIGHT
- A 2" MINIMUM AIR GAP IS REQUIRED BETWEEN THE REAR OF THE CASE AND A WALL
- BULK PRODUCE, SUCTION LINE (6') - 1/2", SUCTION LINE (8' & 12') - 5/8", LIQUID LINE (ALL LENGTHS) - 3/8"
- CUT PRODUCE, SUCTION LINE (6') - 5/8", SUCTION LINE (8' & 12') - 7/8", LIQUID LINE (ALL LENGTHS) - 3/8"
- AVAILABLE SHELF SIZES: 10", 12", 14", 16", 18" & 20"

High Narrow Multi-Deck Produce Merchandiser

ONHPH - 4′, 6′, 8′ & 12′

Electrical Data

Model		Fans per Case	Standard Fans 120 Volts Amps	Standard Fans 120 Volts Watts	High Efficiency Fans 120 Volts Amps	High Efficiency Fans 120 Volts Watts	Anti-Condensate Heaters[1] 120 Volts Amps	Anti-Condensate Heaters[1] 120 Volts Watts	Defrost Heaters 208 Volts Amps	Defrost Heaters 208 Volts Watts	Defrost Heaters 240 Volts Amps	Defrost Heaters 240 Volts Watts
ONHPH	4′	2	1.00	60	0.47	28	- - -[1]	- - -	1.92	400	2.22	532
	6′	3	1.50	90	0.70	42	- - -	- - -	2.88	600	3.33	798
	8′	4	2.00	120	0.93	56	- - -	- - -	3.85	800	4.44	1065
	12′	5	2.50	150	1.17	70	- - -	- - -	5.77	1200	6.67	1600

[1] NOTE: --- not an option on this case model.

Lighting Data

Model		Bulbs per Row	Bulb Length	Typical per Light Row 120 Volts Amps	Typical per Light Row 120 Volts Watts	Maximum Lighting 120 Volts Amps	Maximum Lighting 120 Volts Watts
ONHPH	4′	1	4′	0.23	28	1.87	224
	6′	2	3′	0.37	44	2.93	352
	8′	2	4′	0.47	56	3.73	448
	12′	3	4′	0.70	84	5.60	672

Guidelines & Control Settings

Model	BTUH/ft[2]	Coil Type	Evaporator (°F)	Superheat Set Point @ Bulb (°F)	Discharge Air (°F)	Return Air (°F)	Discharge Air Velocity[4] (FPM)
ONHPH Cut Produce	1330[3]	Enh.	26	6-8	34	46	330
ONHPH Bulk Produce	945[3]	Enh.	29	6-8	37	47	230

[2] BTUHs/ft listed are for parallel operation. Conventional ratings may be approximated by multiplying listed rating by 1.04.

[3] High efficiency fans reduce refrigeration load by 96 BTUHs/fan.

[4] Average discharge air velocity at peak of defrost.

Defrost Controls

Model	Defrosts Per Day	Run-Off Time (min)	Electric Defrost Fail-safe (min)	Electric Defrost Termination Temp. (°F)	Timed Off Defrost Fail-safe (min)	Timed Off Defrost Termination Temp. (°F)	Hot Gas Defrost Fail-safe (min)	Hot Gas Defrost Termination Temp. (°F)	Reverse Air Defrost Fail-safe (min)	Reverse Air Defrost Termination Temp. (°F)
ONHPH	3	6 - 8	35	47	45	47	- - -[5]	- - -	45	45

[5] NOTE: - - - not an option on this case model.

Medium Temperature Defrost Schedule

No. Per Day	Hours
1	12 midnight
2	12 am - 12 pm
3	6 am - 2 pm - 10 pm
4	12 - 6 am - 12 - 6 pm

All measurements are taken per ARI 1200 - 2002 specifications.

NSF COMPONENT

c UL us

Hill PHOENIX EXCELLENCE

A DOVER COMPANY

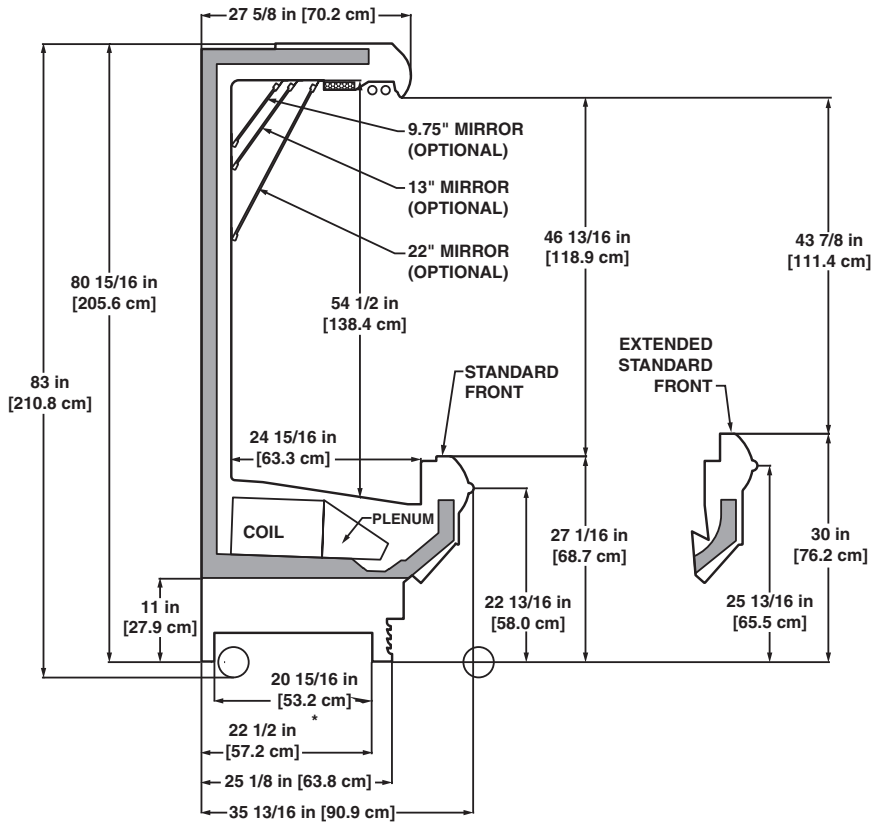

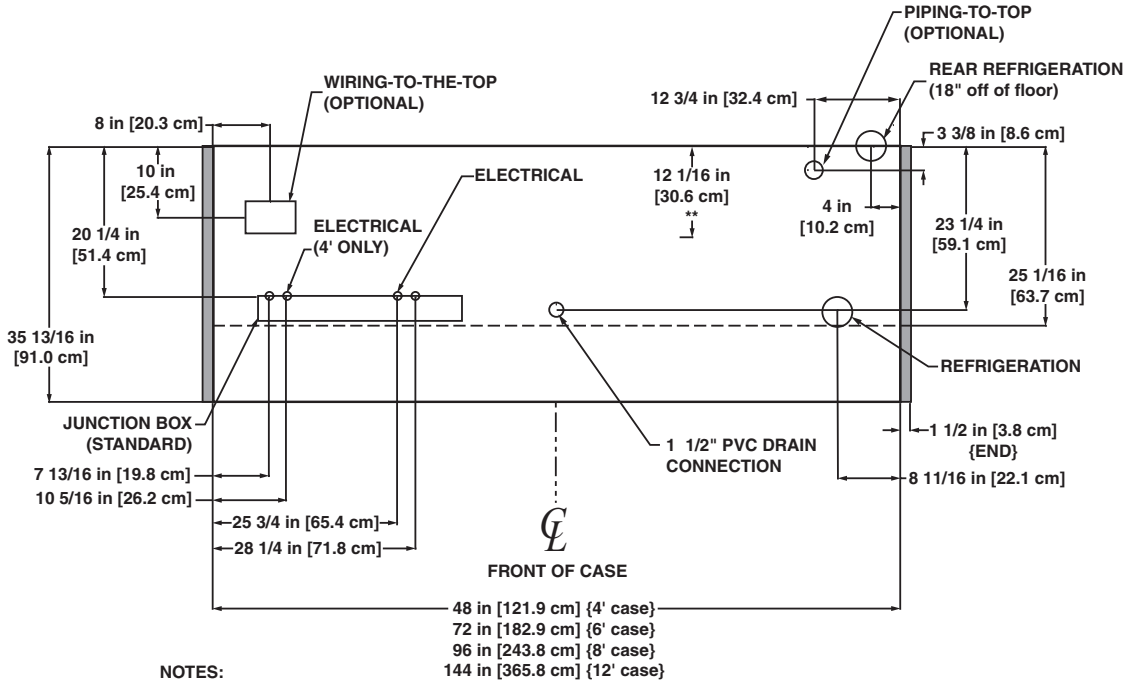

NOTES:

* STUB-UP AREA
** RECOMMENDED STUB-UP CENTERLINE FOR ELECTRICAL AND HUB DRAINS

- FRONT SILL HEIGHT AND OVERALL CASE HEIGHT VARYS WITH BASEFRAME HEIGHT
- ENDS ADD APPROXIMATELY 1 INCH TO CASE HEIGHT
- WIRING-TO-THE-TOP ADDS APPROXIMATELY 1 INCH TO CASE HEIGHT
- A 2" MINIMUM AIR GAP IS REQUIRED BETWEEN THE REAR OF THE CASE AND A WALL
- BULK PRODUCE, SUCTION LINE (6') - 1/2", SUCTION LINE (8' & 12') - 5/8", LIQUID LINE (ALL LENGTHS) - 3/8"
- CUT PRODUCE, SUCTION LINE (6') - 5/8", SUCTION LINE (8' & 12') - 7/8", LIQUID LINE (ALL LENGTHS) - 3/8"
- AVAILABLE SHELF SIZES: 10", 12", 14", 16", 18" & 20"

Multi-Deck Produce Merchandiser

OHP - 4′, 6′, 8′ & 12′

Electrical Data

Model		Fans per Case	Standard Fans 120 Volts Amps	Standard Fans 120 Volts Watts	High Efficiency Fans 120 Volts Amps	High Efficiency Fans 120 Volts Watts	Anti-Condensate Heaters[1] 120 Volts Amps	Anti-Condensate Heaters[1] 120 Volts Watts	Defrost Heaters 208 Volts Amps	Defrost Heaters 208 Volts Watts	Defrost Heaters 240 Volts Amps	Defrost Heaters 240 Volts Watts
OHP	4′	2	1.00	60	0.47	28	0.30[1]	36	1.92	400	2.22	532
	6′	2	1.00	60	0.47	28	0.40[1]	48	2.88	600	3.33	798
	8′	3	1.50	90	0.70	42	0.58[1]	70	3.85	800	4.44	1065
	12′	4	2.00	120	0.93	56	0.83[1]	100	5.77	1200	6.67	1600

[1] Anti-condensate heater data for reduced (cut produce) temperature option only.

Lighting Data

Model		Bulbs per Row	Bulb Length	Typical per Light Row 120 Volts Amps	Typical per Light Row 120 Volts Watts	Maximum Lighting 120 Volts Amps	Maximum Lighting 120 Volts Watts
OHP	4′	1	4′	0.23	28	1.63	196
	6′	2	3′	0.37	44	2.57	308
	8′	2	4′	0.47	56	3.27	392
	12′	3	4′	0.70	84	4.90	588

Guidelines & Control Settings

Model	BTUH/ft[2]	Coil Type	Evaporator (°F)	Superheat Set Point @ Bulb (°F)	Discharge Air (°F)	Return Air (°F)	Discharge Air Velocity[4] (FPM)
OHP Cut Produce	1215[3]	Enh.	26	6-8	31	45	350
OHP Bulk Produce	855[3]	Enh.	29	6-8	36	48	250

[2] BTUHs/ft listed are for parallel operation. Conventional ratings may be approximated by multiplying listed rating by 1.04.

[3] High efficiency fans reduce refrigeration load by 96 BTUHs/fan.

[4] Average discharge air velocity at peak of defrost.

Defrost Controls

Model	Defrosts Per Day	Run-Off Time (min)	Electric Defrost Fail-safe (min)	Electric Defrost Termination Temp. (°F)	Timed Off Defrost Fail-safe (min)	Timed Off Defrost Termination Temp. (°F)	Hot Gas Defrost Fail-safe (min)	Hot Gas Defrost Termination Temp. (°F)	Reverse Air Defrost Fail-safe (min)	Reverse Air Defrost Termination Temp. (°F)
OHP	3	6 - 8	35	47	45	47	26	45	30	45

Medium Temperature Defrost Schedule

No. Per Day	Hours
1	12 midnight
2	12 am - 12 pm
3	6 am - 2 pm - 10 pm
4	12 - 6 am - 12 - 6 pm

All measurements are taken per ARI 1200 - 2002 specifications.

NSF COMPONENT

c UL us

Hill PHOENIX EXCELLENCE

A DOVER COMPANY

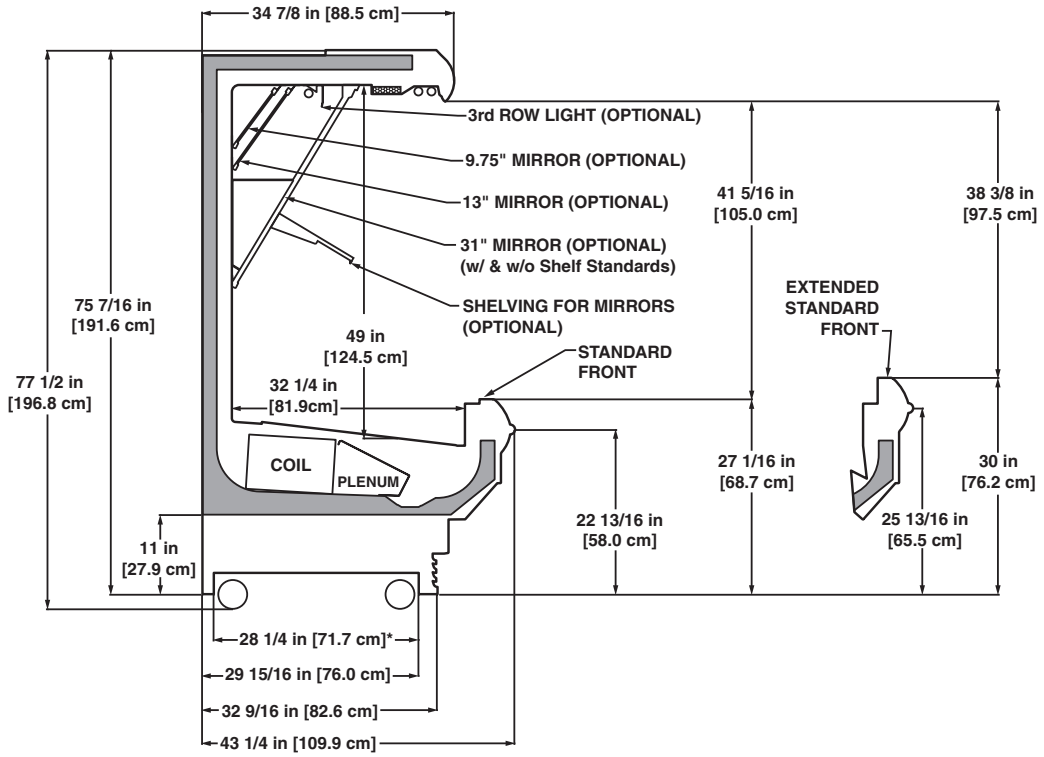

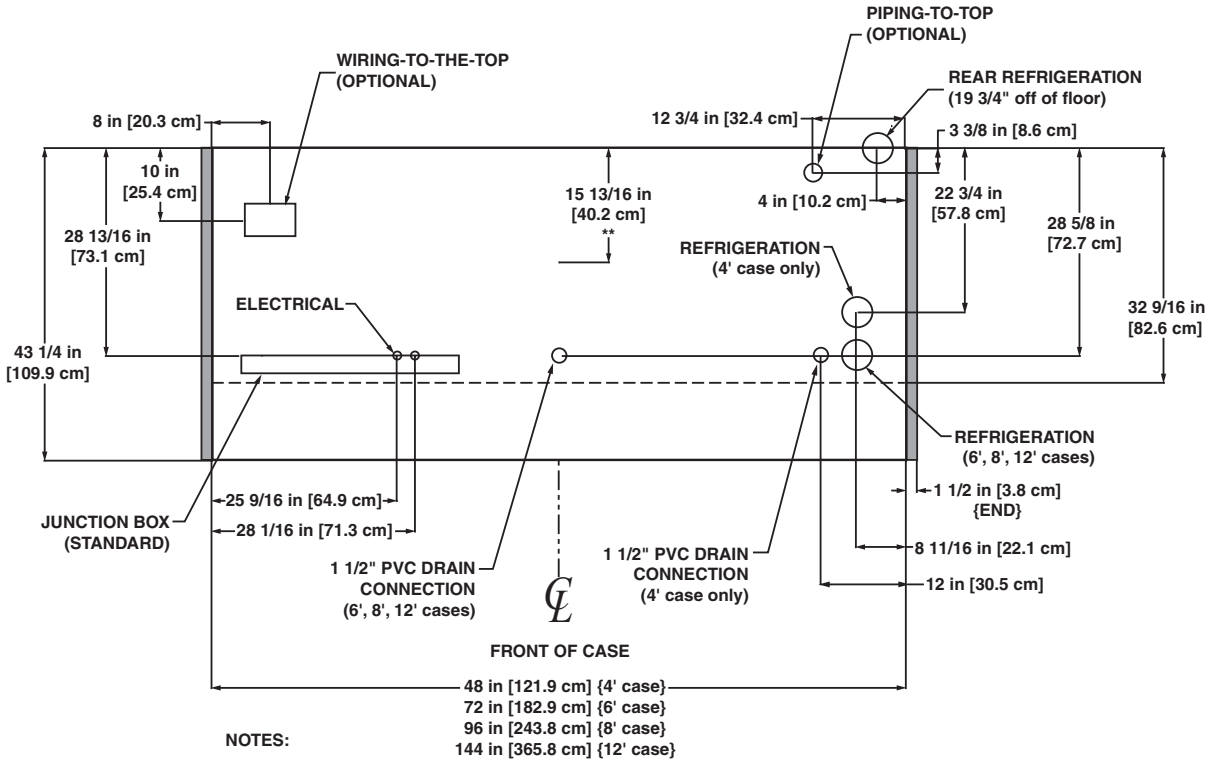

NOTES:

* STUB-UP AREA
** RECOMMENDED STUB-UP CENTERLINE FOR ELECTRICAL AND HUB DRAINS

- FRONT SILL HEIGHT AND OVERALL CASE HEIGHT VARYS WITH BASEFRAME HEIGHT
- ENDS ADD APPROXIMATELY 1 INCH TO CASE HEIGHT
- WIRING-TO-THE-TOP ADDS APPROXIMATELY 1 INCH TO CASE HEIGHT
- A 2" MINIMUM AIR GAP IS REQUIRED BETWEEN THE REAR OF THE CASE AND A WALL
- BULK PRODUCE, SUCTION LINE (4' & 6') - 1/2", SUCTION LINE (8' & 12') - 5/8", LIQUID LINE (ALL LENGTHS) - 3/8"
- CUT PRODUCE, SUCTION LINE (4' & 6') - 5/8", SUCTION LINE (8' & 12') - 7/8", LIQUID LINE (ALL LENGTHS) - 3/8"
- AVAILABLE SHELF SIZES: 10", 12", 14", 16", 18" & 20"

High Multi-Deck Produce Merchandiser

OHPH- 6′, 8′ & 12′

Electrical Data

Model		Fans per Case										
OHPH	6′	3										
	8′	4										
	12′	5										

[1] Anti-condensate heater data for reduced (cut produce) temperature option only.

Lighting Data

Model		Bulbs per Row	Bulb Length	Typical per Light Row 120 Volts Amps	Typical per Light Row 120 Volts Watts	Maximum Lighting 120 Volts Amps	Maximum Lighting 120 Volts Watts
OHPH	6′	2	3′	0.37	44	2.93	352
	8′	2	4′	0.47	56	3.73	448
	12′	3	4′	0.70	84	5.60	672

Guidelines & Control Settings

Model	BTUH/ft[2]	Coil Type	Evaporator (°F)	Superheat Set Point @ Bulb (°F)	Discharge Air (°F)	Return Air (°F)	Discharge Air Velocity[4] (FPM)
OHPH Cut Produce	1460[3]	Enh.	26	6-8	30	45	330
OHPH Bulk Produce	1215[3]	Enh.	29	6-8	31	45	230

[2] BTUHs/ft listed are for parallel operation. Conventional ratings may be approximated by multiplying listed rating by 1.04.

[3] High efficiency fans reduce refrigeration load by 96 BTUHs/fan.

[4] Average discharge air velocity at peak of defrost.

Defrost Controls

Model	Defrosts Per Day	Run-Off Time (min)	Electric Defrost Fail-safe (min)	Electric Defrost Termination Temp. (°F)	Timed Off Defrost Fail-safe (min)	Timed Off Defrost Termination Temp. (°F)	Hot Gas Defrost Fail-safe (min)	Hot Gas Defrost Termination Temp. (°F)	Reverse Air Defrost Fail-safe (min)	Reverse Air Defrost Termination Temp. (°F)
OHPH	3	6 - 8	35	47	45	47	26	45	50	45

Medium Temperature Defrost Schedule

No. Per Day	Hours
1	12 midnight
2	12 am - 12 pm
3	6 am - 2 pm - 10 pm
4	12 - 6 am - 12 - 6 pm

All measurements are taken per ARI 1200 - 2002 specifications.

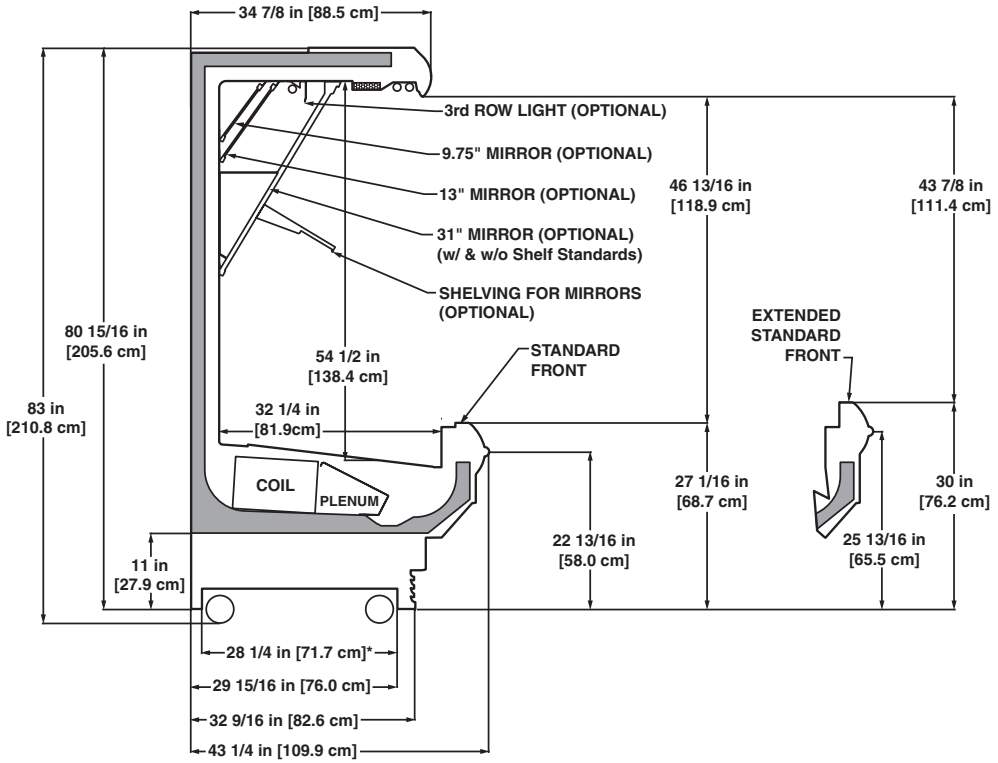

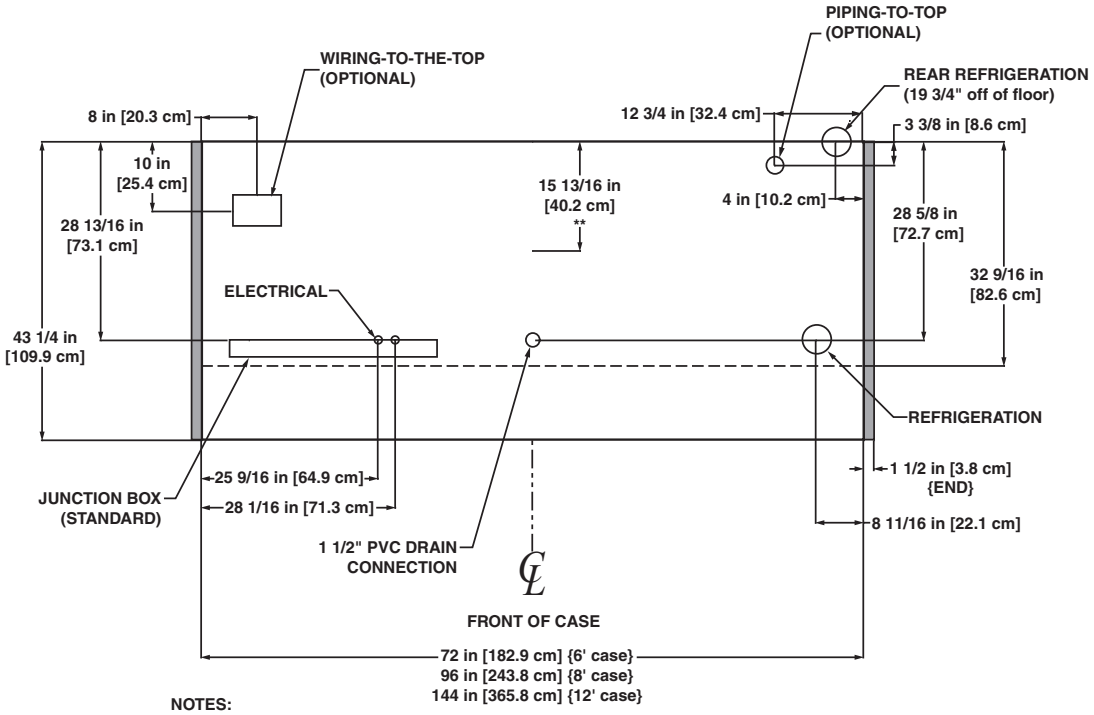

NOTES:

* STUB-UP AREA
** RECOMMENDED STUB-UP CENTERLINE FOR ELECTRICAL AND HUB DRAINS

- FRONT SILL HEIGHT AND OVERALL CASE HEIGHT VARYS WITH BASEFRAME HEIGHT
- ENDS ADD APPROXIMATELY 1 INCH TO CASE HEIGHT
- WIRING-TO-THE-TOP ADDS APPROXIMATELY 1 INCH TO CASE HEIGHT
- A 2" MINIMUM AIR GAP IS REQUIRED BETWEEN THE REAR OF THE CASE AND A WALL
- BULK PRODUCE, SUCTION LINE (6') - 1/2", SUCTION LINE (8' & 12') - 5/8", LIQUID LINE (ALL LENGTHS) - 3/8"
- CUT PRODUCE, SUCTION LINE (6') - 5/8", SUCTION LINE (8' & 12') - 7/8", LIQUID LINE (ALL LENGTHS) - 3/8"
- AVAILABLE SHELF SIZES: 10", 12", 14", 16", 18" & 20"

Wide Multi-Deck Produce Merchandiser

OWHP - 8′ & 12′

Electrical Data

Model		Fans per Case	Standard Fans 120 Volts Amps	Standard Fans 120 Volts Watts	High Efficiency Fans 120 Volts Amps	High Efficiency Fans 120 Volts Watts	Anti-Condensate Heaters 120 Volts Amps	Anti-Condensate Heaters 120 Volts Watts	Defrost Heaters 208 Volts Amps	Defrost Heaters 208 Volts Watts	Defrost Heaters 240 Volts Amps	Defrost Heaters 240 Volts Watts
OWHP	8′	3	1.50	90	0.70	42	0.58[1]	70	3.85	800	4.44	1065
	12′	4	2.00	120	0.93	56	0.83[1]	100	5.77	1200	6.67	1600

[1] Anti-condensate heater data for reduced (cut produce) temperature option only.

Lighting Data

Model		Bulbs per Row	Bulb Length	Typical per Light Row 120 Volts Amps	Typical per Light Row 120 Volts Watts	Maximum Lighting 120 Volts Amps	Maximum Lighting 120 Volts Watts
OWHP	8′	2	4′	0.47	56	3.27	392
	12′	3	4′	0.70	84	4.90	588

Guidelines & Control Settings

Model	BTUH/ft[2]	Coil Type	Evaporator (°F)	Superheat Set Point @ Bulb (°F)	Discharge Air (°F)	Return Air (°F)	Discharge Air Velocity[4] (FPM)
OWHP Cut Produce	1592[3]	Enh.	26	6-8	31	45	350
OWHP Bulk Produce	1120[3]	Enh.	29	6-8	36	48	250

[2] BTUHs/ft listed are for parallel operation. Conventional ratings may be approximated by multiplying listed rating by 1.04.

[3] High efficiency fans reduce refrigeration load by 96 BTUHs/fan.

[4] Average discharge air velocity at peak of defrost.

Defrost Controls

Model	Defrosts Per Day	Run-Off Time (min)	Electric Defrost Fail-safe (min)	Electric Defrost Termination Temp. (°F)	Timed Off Defrost Fail-safe (min)	Timed Off Defrost Termination Temp. (°F)	Hot Gas Defrost Fail-safe (min)	Hot Gas Defrost Termination Temp. (°F)	Reverse Air Defrost Fail-safe (min)	Reverse Air Defrost Termination Temp. (°F)
OWHP	3	6 - 8	35	47	45	47	26	45	50	45

Medium Temperature Defrost Schedule

No. Per Day	Hours
1	12 midnight
2	12 am - 12 pm
3	6 am - 2 pm - 10 pm
4	12 - 6 am - 12 - 6 pm

All measurements are taken per ARI 1200 - 2002 specifications.

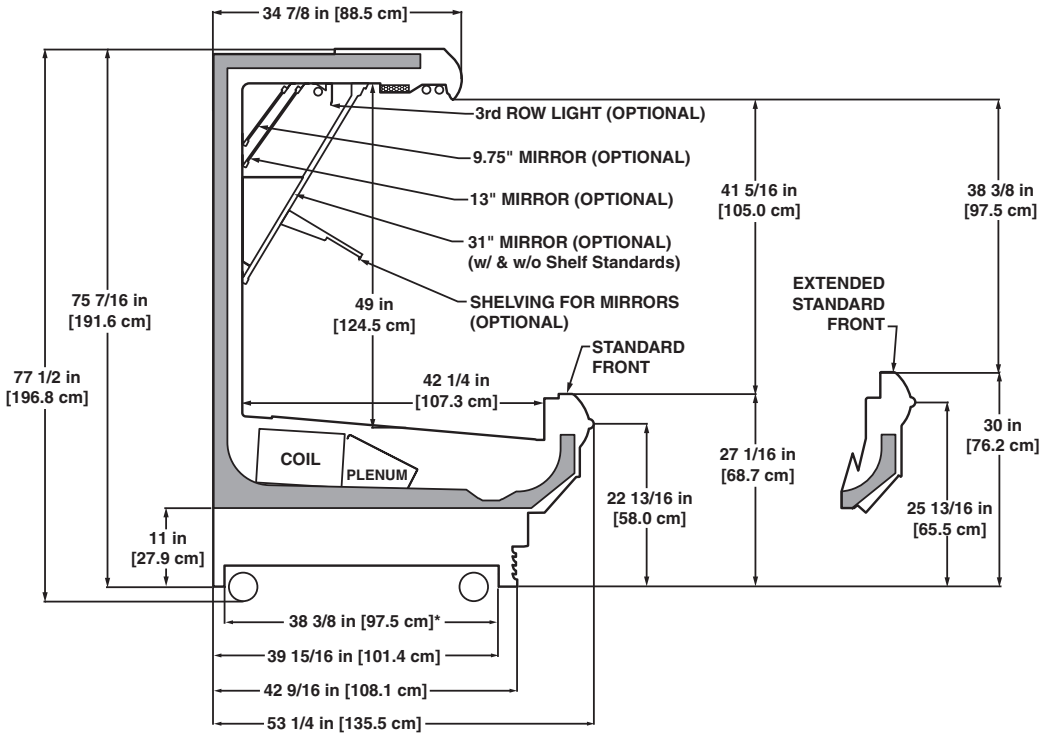

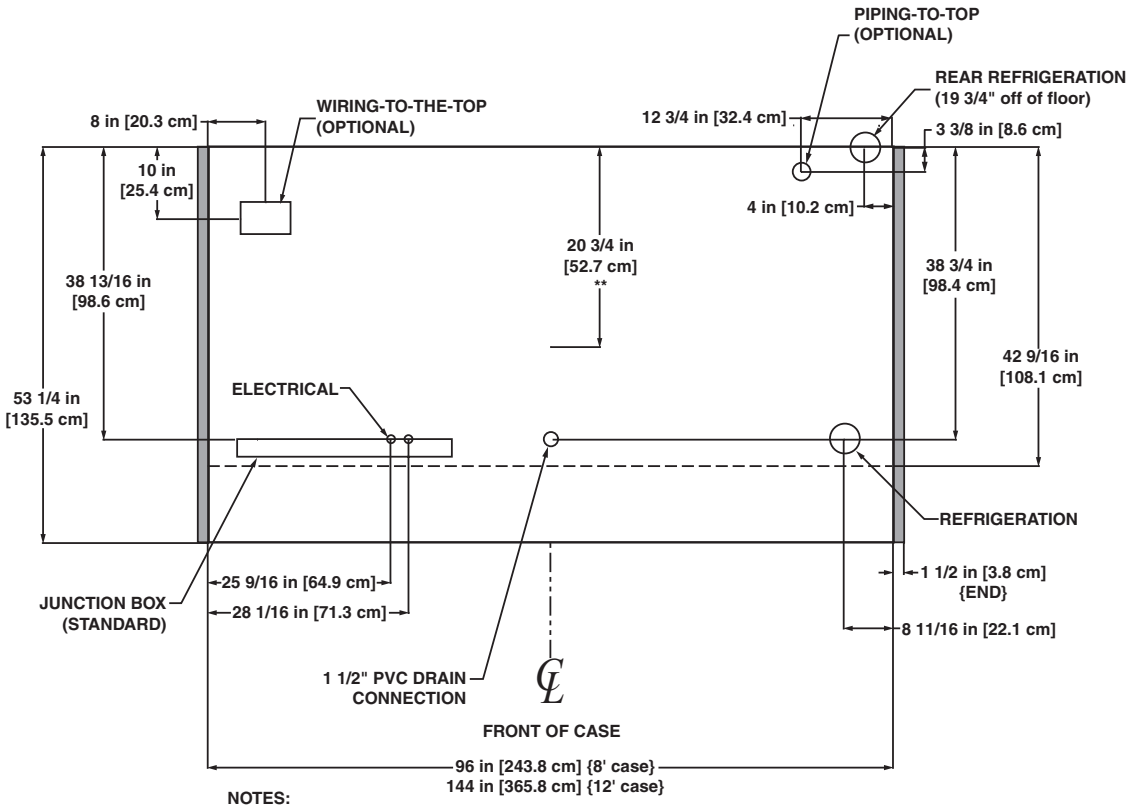

NOTES:

* STUB-UP AREA
** RECOMMENDED STUB-UP CENTERLINE FOR ELECTRICAL AND HUB DRAINS

- FRONT SILL HEIGHT AND OVERALL CASE HEIGHT VARYS WITH BASEFRAME HEIGHT
- ENDS ADD APPROXIMATELY 1 INCH TO CASE HEIGHT
- WIRING-TO-THE-TOP ADDS APPROXIMATELY 1 INCH TO CASE HEIGHT
- A 2" MINIMUM AIR GAP IS REQUIRED BETWEEN THE REAR OF THE CASE AND A WALL
- BULK PRODUCE, SUCTION LINE - 5/8", LIQUID LINE - 3/8"
- CUT PRODUCE, SUCTION LINE - 7/8", LIQUID LINE - 3/8"
- AVAILABLE SHELF SIZES: 10", 12", 14", 16", 18", 20" & 22"

Wide High Multi-Deck Produce Merchandiser

OWHPH - 8′ & 12′

Electrical Data

Model		Fans per Case	Standard Fans 120 Volts Amps	Standard Fans 120 Volts Watts	High Efficiency Fans 120 Volts Amps	High Efficiency Fans 120 Volts Watts	Anti-Condensate Heaters 120 Volts Amps	Anti-Condensate Heaters 120 Volts Watts	Defrost Heaters 208 Volts Amps	Defrost Heaters 208 Volts Watts	Defrost Heaters 240 Volts Amps	Defrost Heaters 240 Volts Watts
OWHPH	8′	4	2.00	120	0.93	56	0.58[1]	70	3.85	800	4.44	1065
	12′	5	2.50	150	1.17	70	0.83[1]	100	5.77	1200	6.67	1600

[1] Anti-condensate heater data for reduced (cut produce) temperature option only.

Lighting Data

Model		Bulbs per Row	Bulb Length	Typical per Light Row 120 Volts Amps	Typical per Light Row 120 Volts Watts	Maximum Lighting 120 Volts Amps	Maximum Lighting 120 Volts Watts
OWHPH	8′	2	4′	0.47	56	3.73	448
	12′	3	4′	0.70	84	5.60	672

Guidelines & Control Settings

Model	BTUH/ft[2]	Coil Type	Evaporator (°F)	Superheat Set Point @ Bulb (°F)	Discharge Air (°F)	Return Air (°F)	Discharge Air Velocity[4] (FPM)
OWHPH Cut Produce	1913[3]	Enh.	26	6-8	30	45	330
OWHPH Bulk Produce	1592[3]	Enh.	29	6-8	31	45	230

[2] BTUHs/ft listed are for parallel operation. Conventional ratings may be approximated by multiplying listed rating by 1.04.

[3] High efficiency fans reduce refrigeration load by 96 BTUHs/fan.

[4] Average discharge air velocity at peak of defrost.

Defrost Controls

Model	Defrosts Per Day	Run-Off Time (min)	Electric Defrost Fail-safe (min)	Electric Defrost Termination Temp. (°F)	Timed Off Defrost Fail-safe (min)	Timed Off Defrost Termination Temp. (°F)	Hot Gas Defrost Fail-safe (min)	Hot Gas Defrost Termination Temp. (°F)	Reverse Air Defrost Fail-safe (min)	Reverse Air Defrost Termination Temp. (°F)
OWHPH	3	6 - 8	35	47	45	47	26	45	50	45

Medium Temperature Defrost Schedule

No. Per Day	Hours
1	12 midnight
2	12 am - 12 pm
3	6 am - 2 pm - 10 pm
4	12 - 6 am - 12 - 6 pm

All measurements are taken per ARI 1200 - 2002 specifications.

NSF COMPONENT

c UL us

Hill PHOENIX EXCELLENCE

A DOVER COMPANY

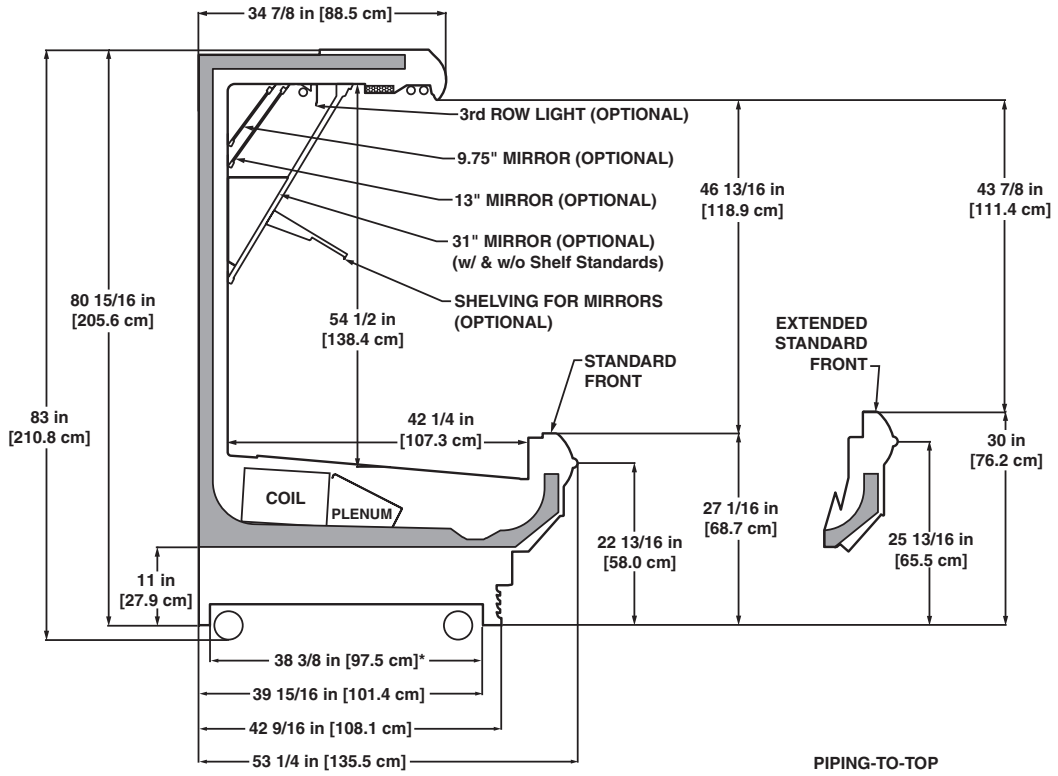

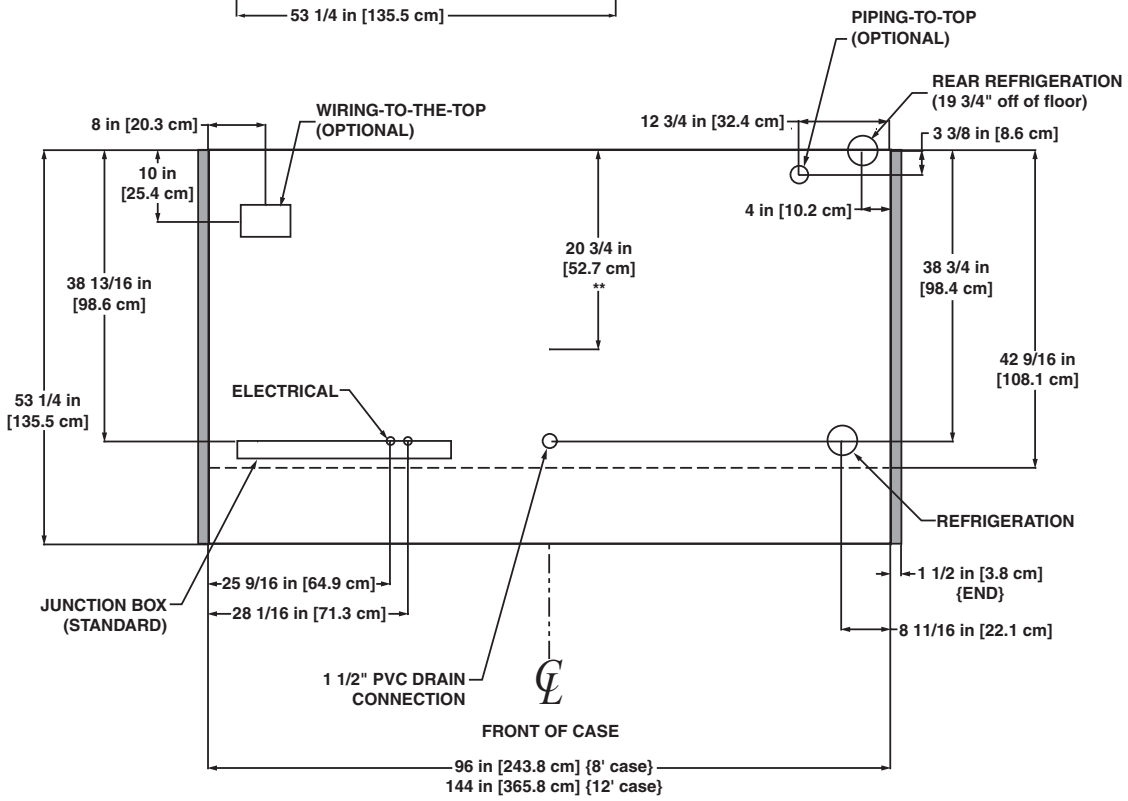

NOTES:

* STUB-UP AREA
** RECOMMENDED STUB-UP CENTERLINE FOR ELECTRICAL AND HUB DRAINS

- FRONT SILL HEIGHT AND OVERALL CASE HEIGHT VARYS WITH BASEFRAME HEIGHT
- ENDS ADD APPROXIMATELY 1 INCH TO CASE HEIGHT
- WIRING-TO-THE-TOP ADDS APPROXIMATELY 1 INCH TO CASE HEIGHT
- A 2" MINIMUM AIR GAP IS REQUIRED BETWEEN THE REAR OF THE CASE AND A WALL
- BULK PRODUCE, SUCTION LINE - 5/8", LIQUID LINE - 3/8"
- CUT PRODUCE, SUCTION LINE - 7/8", LIQUID LINE - 3/8"
- AVAILABLE SHELF SIZES: 10", 12", 14", 16", 18", 20" & 22"

Narrow Multi-Deck Dairy Merchandiser

ONN - 47″

Electrical Data

Model		Fans per Case	Standard Fans 120 Volts Amps	Standard Fans 120 Volts Watts	High Efficiency Fans 120 Volts Amps	High Efficiency Fans 120 Volts Watts	Anti-Condensate Heaters 120 Volts Amps	Anti-Condensate Heaters 120 Volts Watts	Defrost Heaters 208 Volts Amps	Defrost Heaters 208 Volts Watts	Defrost Heaters 240 Volts Amps	Defrost Heaters 240 Volts Watts
ONN	47″	3	1.02	51	0.45	33	- - -[1]	- - -	1.92	400	2.22	532

[1] NOTE: - - - not an option on this case model.

Lighting Data

Model		Bulbs per Row	Bulb Length	Typical per Light Row 120 Volts Amps	Typical per Light Row 120 Volts Watts	Maximum Lighting 120 Volts Amps	Maximum Lighting 120 Volts Watts
ONN	47″	1	3′	0.19	23	0.19	23

Guidelines & Control Settings

Model	BTUH/cs[2]	Coil Type	Evaporator (°F)	Superheat Set Point @ Bulb (°F)	Discharge Air (°F)	Return Air (°F)	Discharge Air Velocity[3] (FPM)
ONN	4220	Enh.	22	6-8	31	43	275

[2] BTUHs/case listed are for parallel operation. Conventional ratings may be approximated by multiplying listed rating by 1.04.

[3] Average discharge air velocity at peak of defrost.

Defrost Controls

Model	Defrosts Per Day	Electric Defrost Fail-safe (min)	Electric Defrost Termination Temp. (°F)	Timed Off Defrost Fail-safe (min)	Timed Off Defrost Termination Temp. (°F)	Hot Gas Defrost Fail-safe (min)	Hot Gas Defrost Termination Temp. (°F)	Reverse Air Defrost Fail-safe (min)	Reverse Air Defrost Termination Temp. (°F)
ONN	6	35	47	40	47	25	45	- - -	- - -

Medium Temperature Defrost Schedule

No. Per Day	Hours
1	12 midnight
2	12 am - 12 pm
3	6 am - 2 pm - 10 pm
4	12 - 6 am - 12 - 6 pm

Hill PHOENIX EXCELLENCE

A DOVER COMPANY

All measurements are taken per ARI 1200 - 2002 specifications.

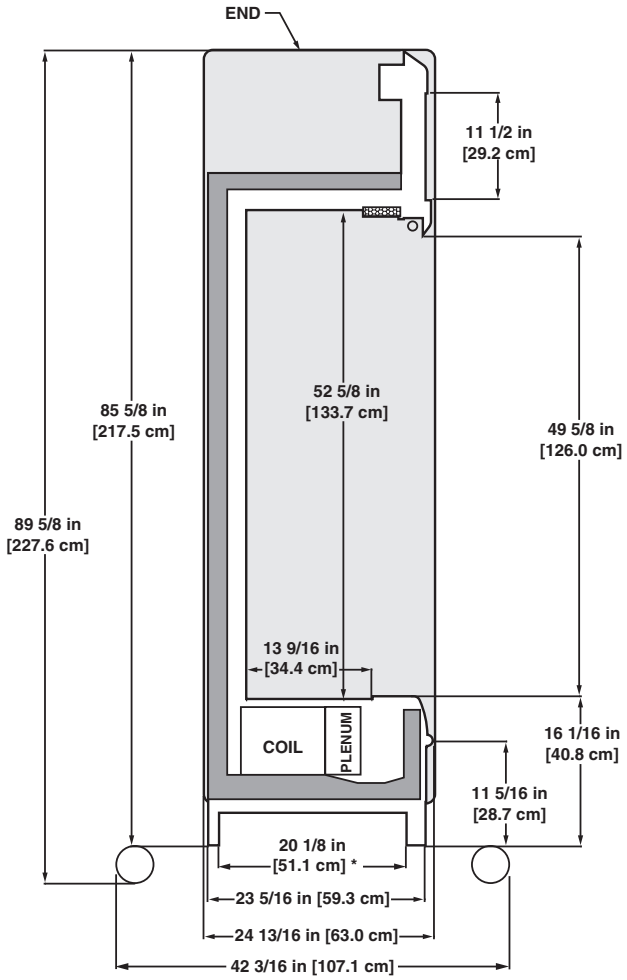

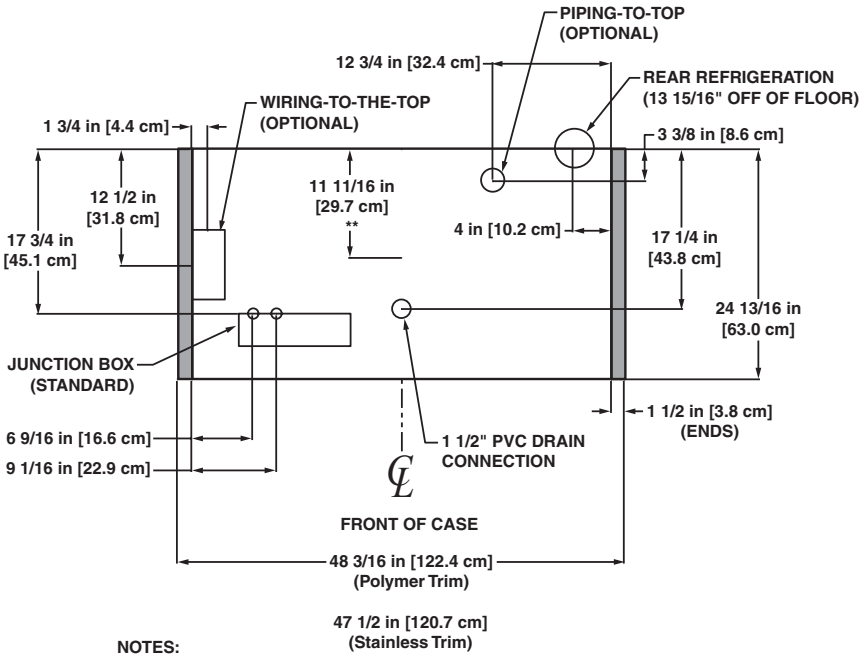

NOTES:

* STUB-UP AREA
** RECOMMENDED STUB-UP CENTERLINE FOR ELECTRICAL AND HUB DRAINS

- A 2" MINIMUM AIR GAP IS REQUIRED BETWEEN THE REAR OF THE CASE AND A WALL
- ENDS ARE ALSO AVAILABLE IN 1" WIDTHS
- SUCTION LINE 7/8", LIQUID LINE - 3/8", LIQUID LINE PIPED-TO-TOP - 5/8"
- AVAILABLE SHELF SIZES: 12"

Narrow Multi-Deck Self-Contained Dairy Merchandiser

ONNA

System Requirements

Model		Volts	Phase	Hz	Wire	Minimum Circuit Ampacity	Maximum Overcurrent Protection
ONNA	47″	120	1	60	2 wire + ground	23.63	45

Electrical Data

Model		Fans per Case	Standard Fans		Condenser Fan		Drain Pump		Evap. Pan Heater		Maximum Lights	
			120 Volts		120 Volts		120 Volts		120 Volts		120 Volts	
			Amps	Watts	Amps	Watts	Amps	Watts	Amps	Watts	Amps	Watts
ONNA	47″	3	1.02	51	0.85	88	0.9	54	8.34	1000	0.57	68

Guidelines & Control Settings

Model	24 hr Energy Usage (kWh)	Suction Pressure @ Case Outlet (psig)	Superheat Set Point @ Bulb (°F)	Discharge Air (°F)	Return Air (°F)	Discharge Air Velocity[1] (FPM)
ONNA-47″	37.2	19.9	6-8	35	43	275

[1] Average discharge air velocity at peak of defrost.

Condensing Unit Data

Model	Volts	Phase	Frequency (Hz)	HP	RLA[2] (amps)	LRA[3] (amps)	Refrig.	lbs of Refrig.
ONNA-47″	120	1	60	1/2	12.9	66.3	R134A	2

[2] RLA - Running Load Amps.

[3] LRA - Locked Rotor Amps.

Defrost Controls

Model	Defrosts Per Day	Electric Defrost		Timed Off Defrost		Hot Gas Defrost		Reverse Air Defrost	
		Fail-safe (min)	Termination Temp. (°F)	Fail-safe (min)	Termination Temp. (°F)	Fail-safe (min)	Termination Temp. (°F)	Fail-safe (min)	Termination Temp. (°F)
ONNA	6	- - -	- - -	40	47	- - -	- - -	- - -	- - -

Medium Temperature Defrost Schedule

No. Per Day	Hours
1	12 midnight
2	12 am - 12 pm
3	6 am - 2 pm - 10 pm
4	12 - 6 am - 12 - 6 pm

All measurements are taken per ARI 1200 - 2002 specifications.

Hill PHOENIX EXCELLENCE

A DOVER COMPANY

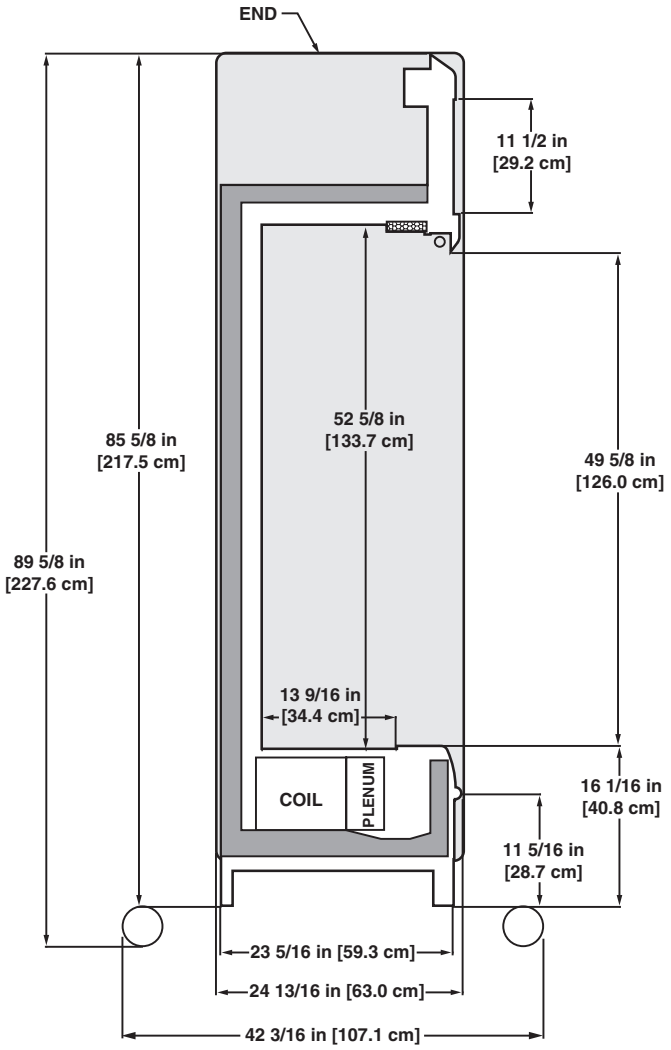

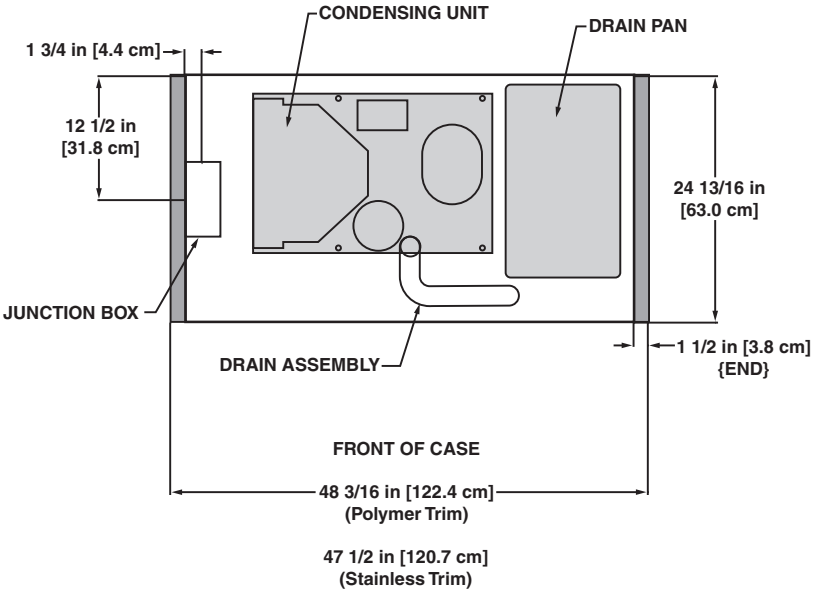

NOTES:

- A 2" MINIMUM AIR GAP IS REQUIRED BETWEEN THE REAR OF THE CASE AND A WALL
- ENDS ARE ALSO AVAILABLE IN 1" WIDTHS
- AVAILABLE SHELF SIZES: 12"

Narrow Multi-Deck Produce/Dairy/Deli/Meat Merchandiser

ONU- 4′/47″ & 6′

Electrical Data

Model		Fans per Case	Standard Fans		High Efficiency Fans		Anti-Condensate Heaters		Defrost Heaters			
			120 Volts		120 Volts		120 Volts		208 Volts		240 Volts	
			Amps	Watts	Amps	Watts	Amps	Watts	Amps	Watts	Amps	Watts
ONU	4′/47″	2	1.00	60	0.47	28	- - -[1]	- - -	1.92	400	2.22	532
	6′	3	1.50	90	0.70	42	- - -	- - -	2.88	600	3.33	798

[1] NOTE: - - - not an option on this case model.

Lighting Data

Model		Bulbs per Row	Bulb Length	Typical per Light Row		Maximum Lighting	
				120 Volts		120 Volts	
				Amps	Watts	Amps	Watts
ONU	4′/47″	1	4′	0.23	28	1.87	224
	6′	2	3′	0.37	44	2.93	352

Guidelines & Control Settings

Model[2]	BTUH/ft[3]	Evaporator (°F)	Superheat Set Point @ Bulb (°F)	Discharge Air (°F)	Return Air (°F)	Discharge Air Velocity[5] (FPM)
ONU	1450[4]	17	6-8	30	40	310

[2] Model ONU only available for meat application with the 7 1/2″extended front w/ nose lights and no shelf lights.

[3] BTUHs/ft listed are for parallel operation. Conventional ratings may be approximated by multiplying listed rating by 1.04.

[4] High efficiency fans reduce refrigeration load by 96 BTUHs/fan.

[5] Average discharge air velocity at peak of defrost.

Defrost Controls

Model	Defrosts Per Day	Run-Off Time (min)	Electric Defrost		Timed Off Defrost		Hot Gas Defrost		Reverse Air Defrost	
			Fail-safe (min)	Termination Temp. (°F)	Fail-safe (min)	Termination Temp. (°F)	Fail-safe (min)	Termination Temp. (°F)	Fail-safe (min)	Termination Temp. (°F)
ONU	4	6 - 8	35	47	45[6]	47[6]	25	45	- - -	- - -

[6] Timed Off Defrost not recommended for Fresh Meat application.

Medium Temperature Defrost Schedule

No. Per Day	Hours
1	12 midnight
2	12 am - 12 pm
3	6 am - 2 pm - 10 pm
4	12 - 6 am - 12 - 6 pm

All measurements are taken per ARI 1200 - 2002 specifications.

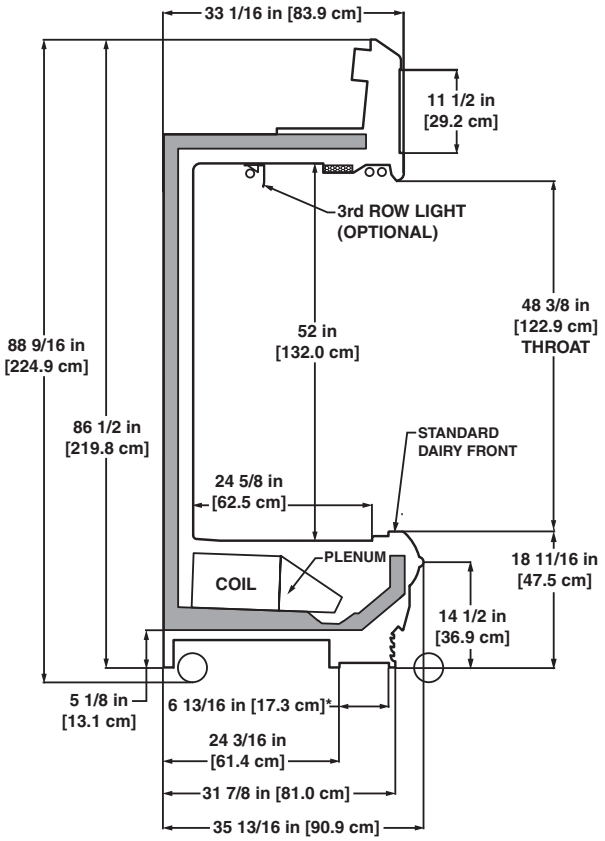

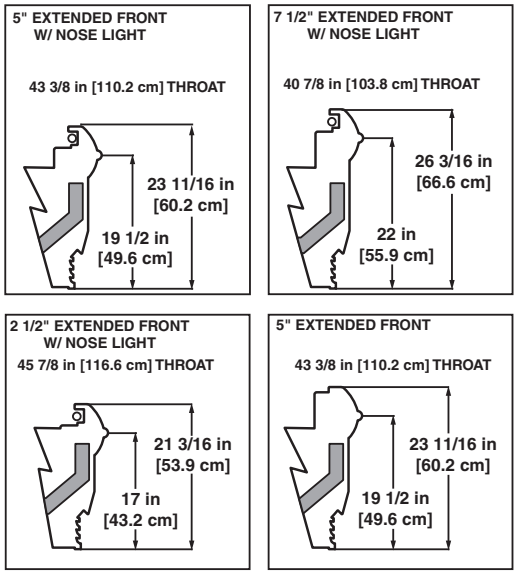

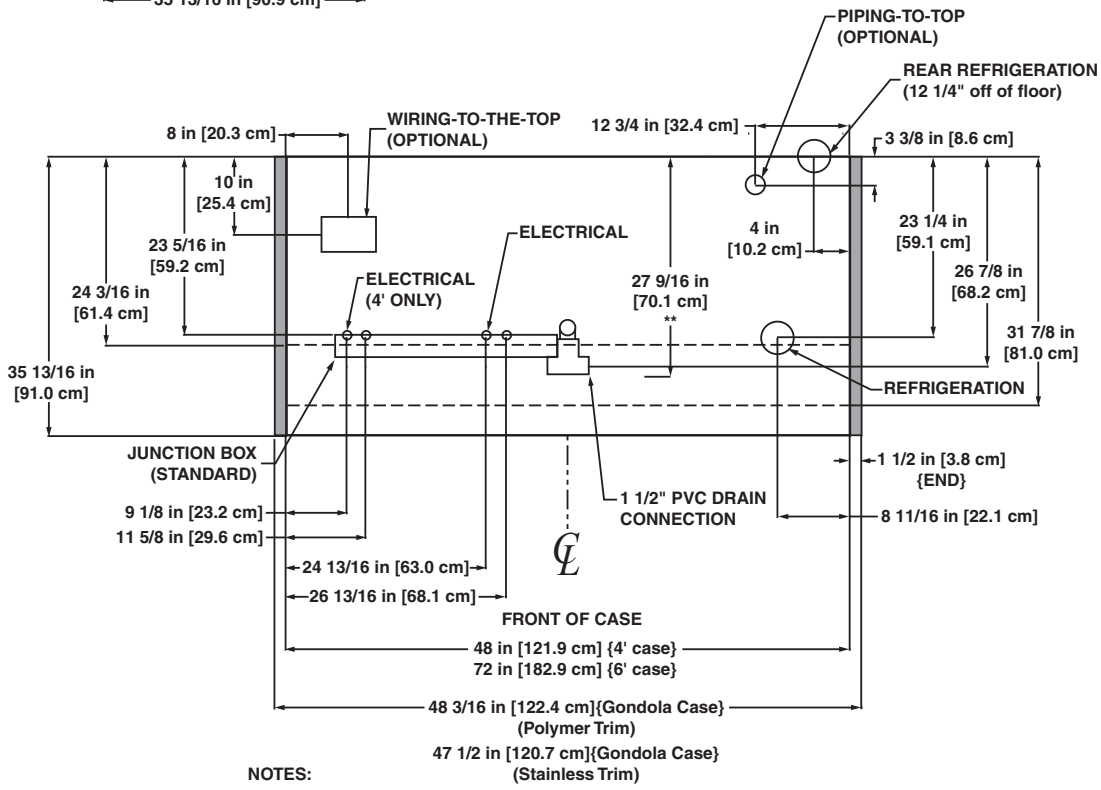

NOTES:

* STUB-UP AREA
** RECOMMENDED STUB-UP CENTERLINE FOR ELECTRICAL AND HUB DRAINS

- FRONT SILL HEIGHT AND OVERALL CASE HEIGHT VARYS WITH BASEFRAME HEIGHT
- ENDS ADD APPROXIMATELY 1 INCH TO CASE HEIGHT
- WIRING-TO-THE-TOP ADDS APPROXIMATELY 1 INCH TO CASE HEIGHT
- A 2" MINIMUM AIR GAP IS REQUIRED BETWEEN THE REAR OF THE CASE AND A WA
- SUCTION LINE - 7/8", LIQUID LINE - 3/8", LIQUID LINE PIPED-TO-TOP - 5/8"
- AVAILABLE SHELF SIZES: 10", 12", 14", 16" & 18"

Narrow Multi-Deck Self-Contained Produce/Dairy/Deli/Meat Merchandiser

ONUA - 4′/47″ & 6′

System Requirements

Model		Volts	Phase	Hz	Wire	Minimum Circuit Ampacity	Maximum Overcurrent Protection
ONUA	4′/47″	208	1	60	3 wire + ground	16.220	30
	6′	208	1	60	3 wire + ground	22.000	40

Electrical Data

Model		Fans per Case	Standard Fans		Condenser Fan		Drain Pump		Evap. Pan Heater		Maximum Lights	
			120 Volts		208 Volts		120 Volts		208 Volts		120 Volts	
			Amps	Watts	Amps	Watts	Amps	Watts	Amps	Watts	Amps	Watts
ONUA	4′/47″	2	1.00	60	2.60	130	0.90	108	7.21	1500	1.87	224
	6′	3	1.50	90	1.10	114	0.90	108	7.21	1500	2.93	352

Guidelines & Control Settings

Model[1]	24 hr Energy Usage (kWh)	Suction Pressure @ Case Outlet (psig)	Superheat Set Point @ Bulb (°F)	Discharge Air (°F)	Return Air (°F)	Discharge Air Velocity[2] (FPM)
ONUA-4′/47″	43.9	33	6-8	27.5	39	310
ONUA-6′	59.3	33	6-8	27.5	39	310

[1] Model ONUA only available for meat application with the 7 1/2″extended front w/ nose lights and no shelf lights.

[2] Average discharge air velocity at peak of defrost.

Condensing Unit Data

Model	Volts	Phase	Frequency (Hz)	HP	RLA[3] (amps)	LRA[4] (amps)	Refrig.	lbs of Refrig.
ONUA-4′/47″	208	1	60	1	7.0	34.2	R22	5.9
ONUA-6′	208	1	60	1 1/2	10.4	48.2	R22	6.75

[3] RLA - Running Load Amps.

[4] LRA - Locked Rotor Amps.

Defrost Controls

Model	Defrosts Per Day	Electric Defrost		Timed Off Defrost		Hot Gas Defrost		Reverse Air Defrost	
		Fail-safe (min)	Termination Temp. (°F)	Fail-safe (min)	Termination Temp. (°F)	Fail-safe (min)	Termination Temp. (°F)	Fail-safe (min)	Termination Temp. (°F)
ONUA	4	- - -[5]	- - -	40	45	- - -	- - -	- - -	- - -

[5] NOTE: - - - not an option on this case model.

Medium Temperature Defrost Schedule

No. Per Day	Hours
1	12 midnight
2	12 am - 12 pm
3	6 am - 2 pm - 10 pm
4	12 - 6 am - 12 - 6 pm

All measurements are taken per ARI 1200 - 2002 specifications.

Hill PHOENIX EXCELLENCE

A DOVER COMPANY

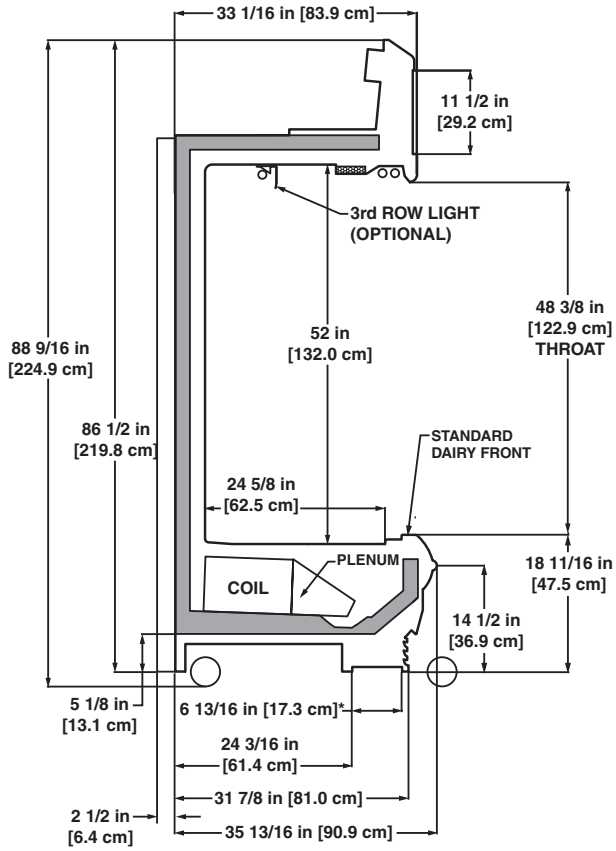

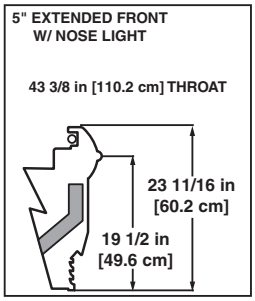

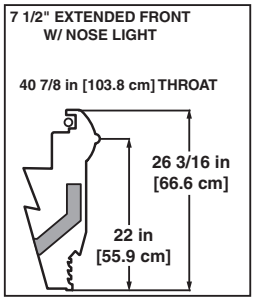

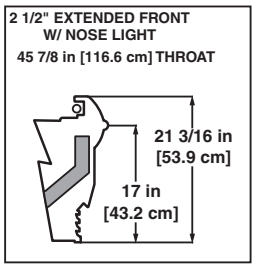

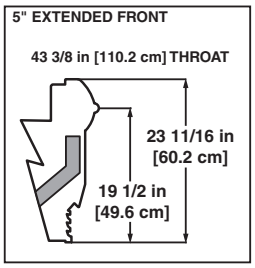

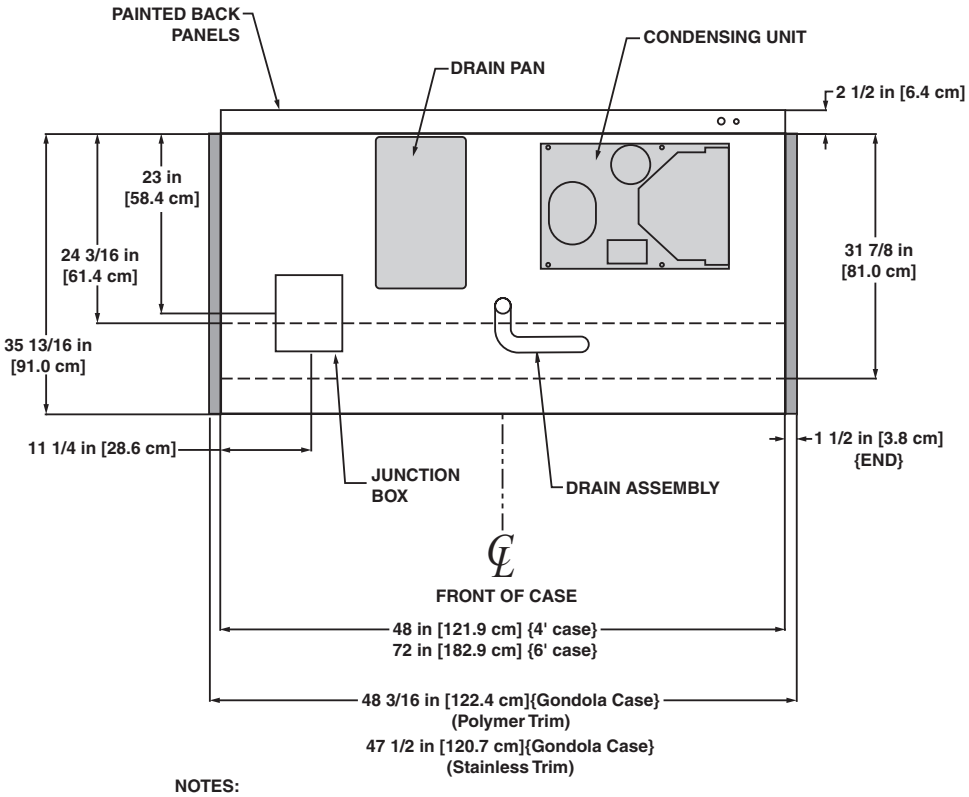

NOTES:

- FRONT SILL HEIGHT AND OVERALL CASE HEIGHT VARYS WITH BASEFRAME HEIGHT
- ENDS ADD APPROXIMATELY 1 INCH TO CASE HEIGHT
- A 2" MINIMUM AIR GAP IS REQUIRED BETWEEN THE REAR OF THE CASE AND A WALL
- AVAILABLE SHELF SIZES: 10", 12", 14", 16" & 18"

Roll-In Rear Load Dairy Merchandiser

ORDR - 8′ & 12′ dairy

Electrical Data

Model		Fans per Case		Upper Standard Fans		Lower Standard Fans		Upper High Efficiency Fans		Lower High Efficiency Fans		Anti-Condensate Heaters	
				120 Volts		120 Volts		120 Volts		120 Volts		120 Volts	
		Upper	Lower	Amps	Watts	Amps	Watts	Amps	Watts	Amps	Watts	Amps	Watts
ORDR	8′	3	4	1.50	90	1.80	68	0.90	60	0.60	44	0.58	70
	12′	4	6	2.00	120	2.70	102	1.20	80	0.90	66	0.83	100

Electrical Data (Continued)

Model		Defrost Heaters			
		208 Volts		240 Volts	
		Amps	Watts	Amps	Watts
ORDR	8′	3.85	800	4.44	1066
	12′	5.77	1200	6.67	1600

Lighting Data

Model		Bulbs per Row	Bulb Length	Typical per Light Row		Maximum Lighting	
				120 Volts		120 Volts	
				Amps	Watts	Amps	Watts
ORDR	8′	2	4′	0.47	56	4.17	500
	12′	3	4′	0.70	84	6.33	760

Guidelines & Control Settings

Model	BTUH/ft[1]	Evaporator (°F)	Superheat Set Point @ Bulb (°F)	Discharge Air (°F)	Return Air (°F)	Discharge Air Velocity[2] (FPM)
ORDR[3]	739	17	6-8	28	44	310

[1] BTUHs/ft listed are for parallel operation. Conventional ratings may be approximated by multiplying listed rating by 1.04.

[2] Average discharge air velocity at peak of defrost.

[3] Back-up coils with a capacity of 1666 BTUH/ft at a suction temperature of 20°F must be used for each case to refrigerate the area immediately behind the line-up to a depth of 10′. If the cooler is longer than the ORDR line-up and deeper than 10′, other coils are needed to refrigerate the balance of the cooler area. Each auxiliary coil should be centered on each case and set back a distance of 3′ to 5′ from the back of the ORDR. The cooler box must have a maximum temperature of no more than 34°F.

Defrost Controls

Model	Defrosts Per Day	Run-Off Time (min)	Electric Defrost		Timed Off Defrost		Hot Gas Defrost		Reverse Air Defrost	
			Fail-safe (min)	Termination Temp. (°F)	Fail-safe (min)	Termination Temp. (°F)	Fail-safe (min)	Termination Temp. (°F)	Fail-safe (min)	Termination Temp. (°F)
ORDR	4	6 - 8	30	47	30	47	26	45	- - -[4]	- - -

[4] NOTE: - - - not an option on this case model.

Medium Temperature Defrost Schedule

No. Per Day	Hours
1	12 midnight
2	12 am - 12 pm
3	6 am - 2 pm - 10 pm
4	12 - 6 am - 12 - 6 pm

All measurements are taken per ARI 1200 - 2002 specifications.

Hill PHOENIX EXCELLENCE

A DOVER COMPANY

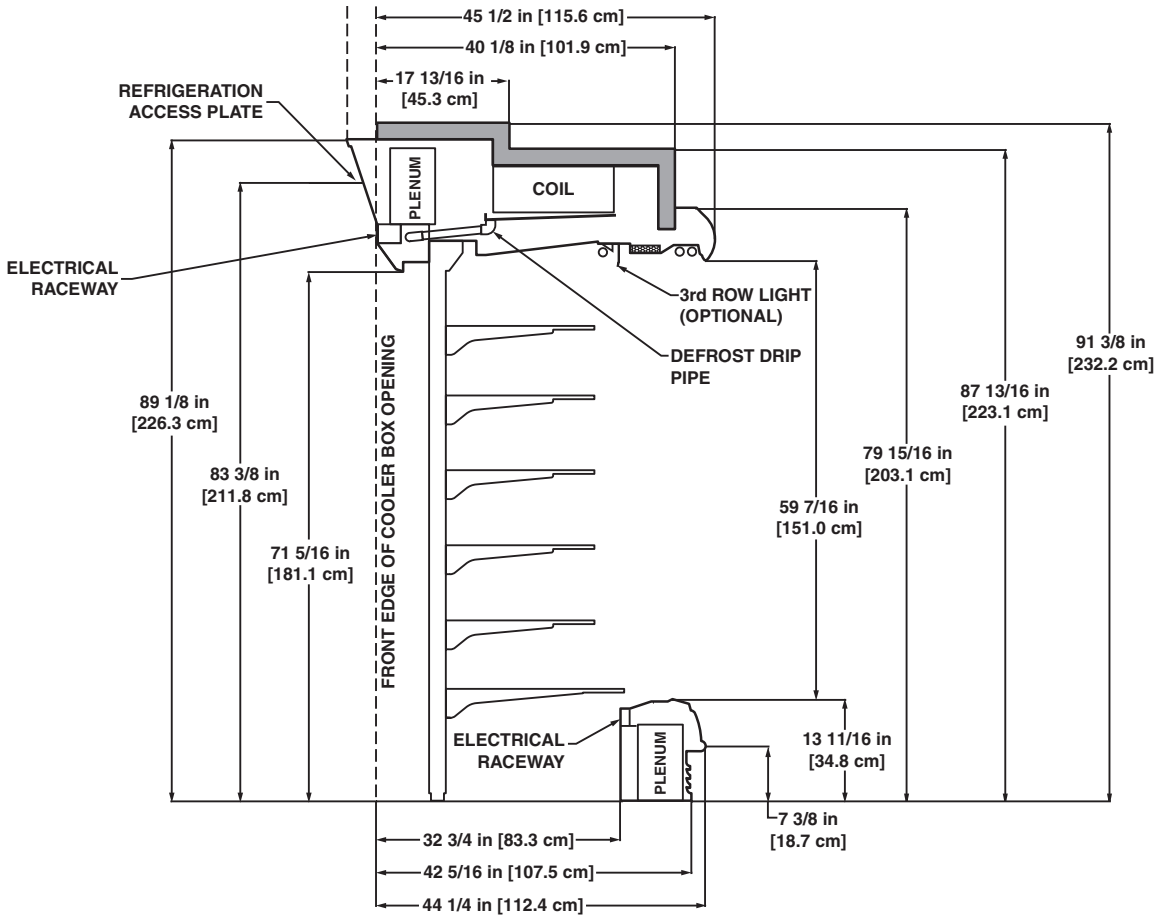

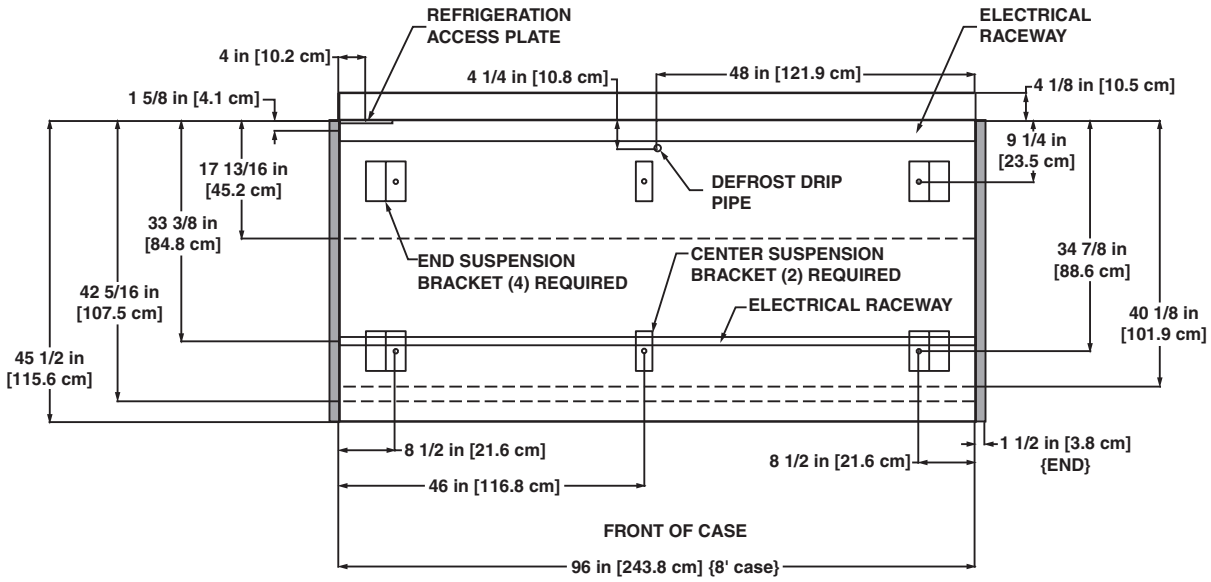

NOTES:

- SUCTION LINE - 7/8", LIQUID LINE - 3/8"
- AVAILABLE SHELF SIZES: 20" & 24"
- RECOMMENDED CONFIGURATION IS 5 ROWS OF 20" SHELVES WITH 1 ROW OF 24"SHELVES IN THE LOWEST POSITION

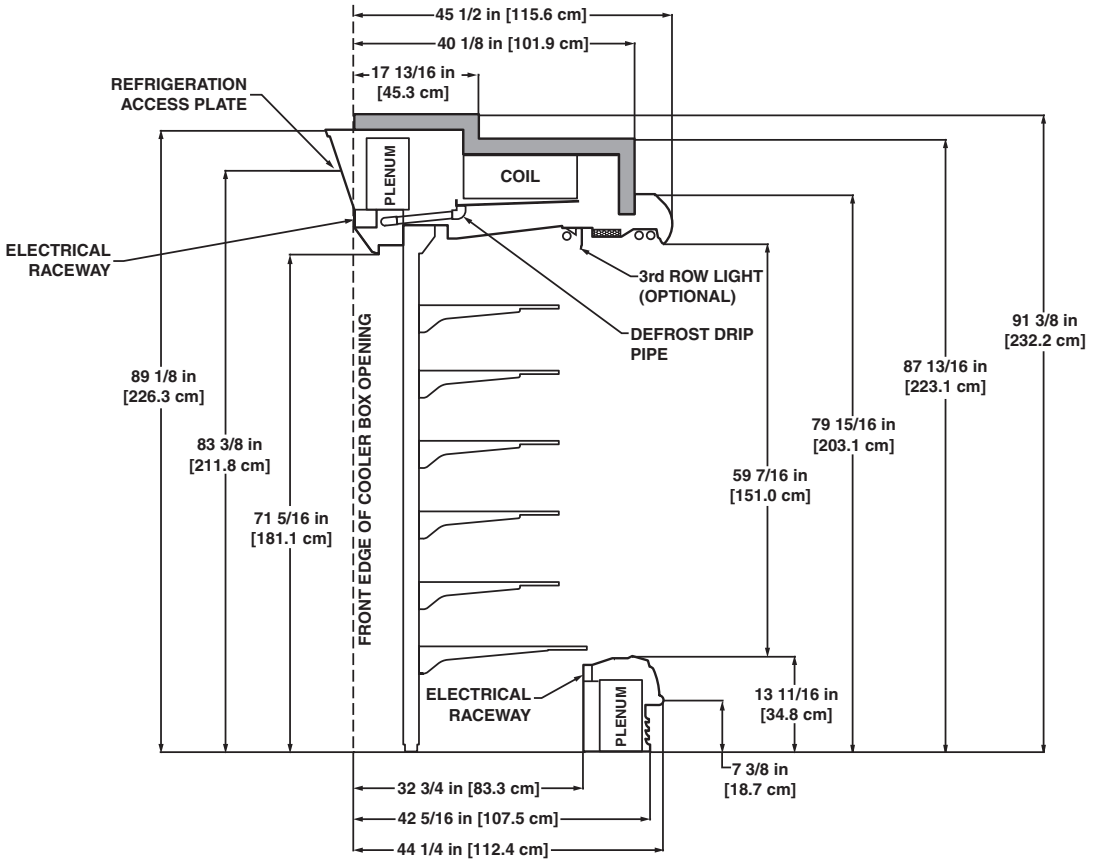

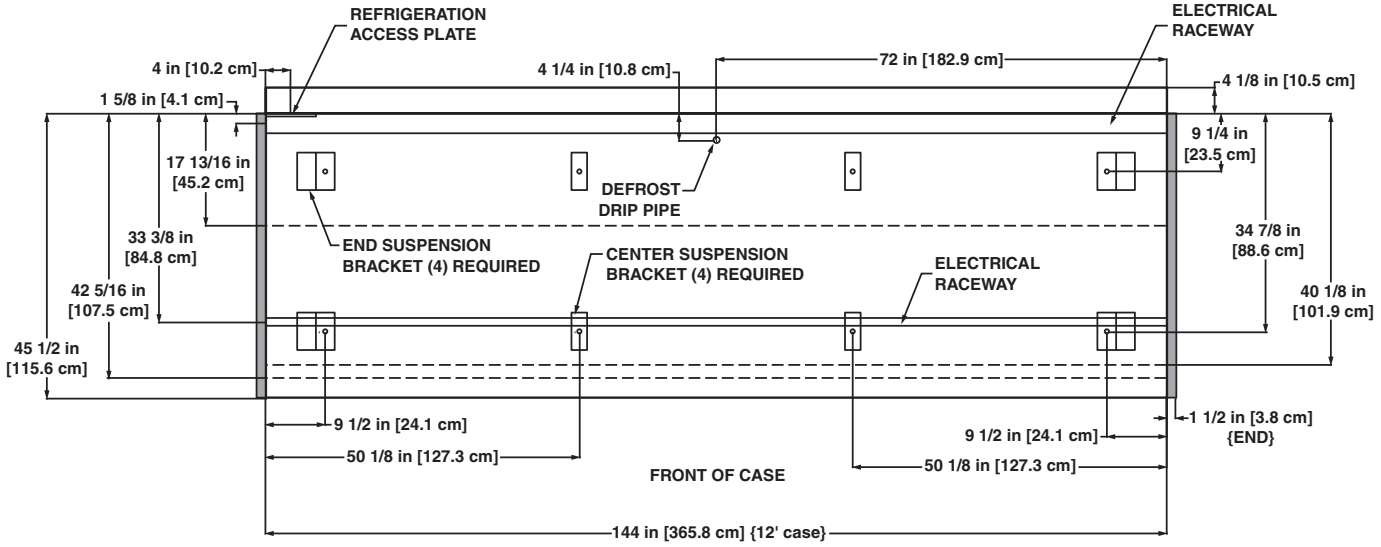

NOTES:

- SUCTION LINE - 7/8", LIQUID LINE - 3/8"
- AVAILABLE SHELF SIZES: 20" & 24"
- RECOMMENDED CONFIGURATION IS 5 ROWS OF 20" SHELVES WITH 1 ROW OF 24"SHELVES IN THE LOWEST POSITION

END CAPS

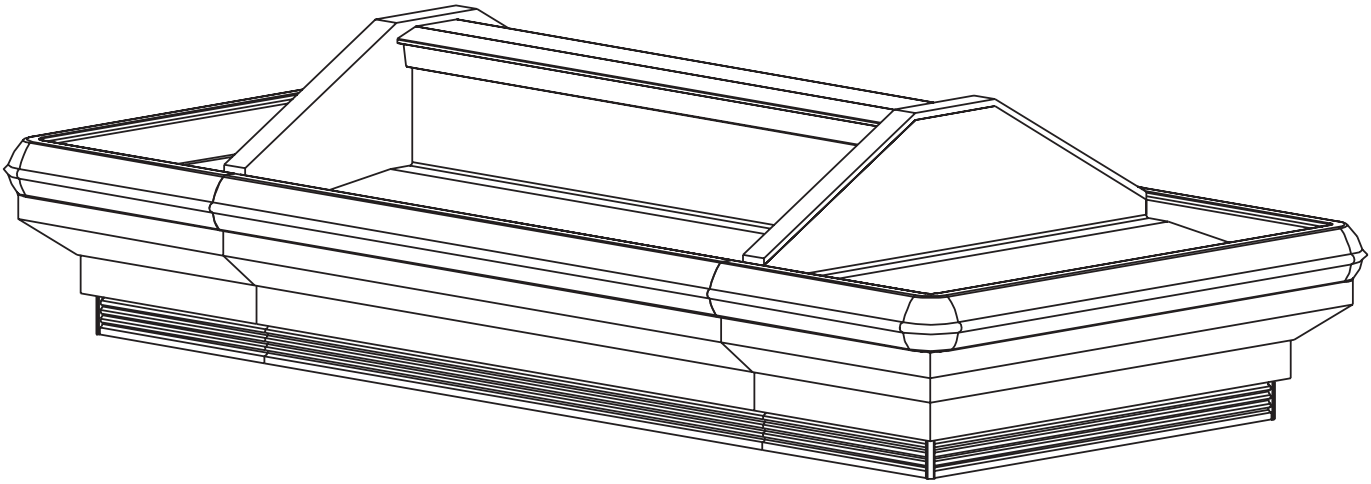

Notes:

- **Cases comply with ANSI / NSF* Standard 7. Units marked as components require remote refrigeration.**
- **Allow for an extra 1/8" per joint when lining up merchandisers.**
- **Front sill height does not affect case performance unless specifically shown.**
- **Front and rear sill heights vary with baseframe height.**

* ANSI - American National Standard Institute
NSF - National Sanitation Foundation

Narrow Single-Deck Frozen Meat End Cap Merchandiser

ONEMZ

Electrical Data

Model	Fans per Case	Standard Fans		High Efficiency Fans		Anti-Condensate Heaters		Defrost Heaters			
		120 Volts		120 Volts		120 Volts		208 Volts		240 Volts	
		Amps	Watts	Amps	Watts	Amps	Watts	Amps	Watts	Amps	Watts
ONEMZ	2	1.00	60	0.23	14	0.35	42	2.88	600	3.33	798

Lighting Data

Model	Bulbs per Row	Bulb Length	Typical per Light Row		Maximum Lighting	
			120 Volts		120 Volts	
			Amps	Watts	Amps	Watts
ONEMZ	1	5′	- - -[1]	- - -	- - -	- - -

[1] NOTE: - - - not an option on this case model.

Guidelines & Control Settings

Model	BTUH/cs[2]	Coil Type	Evaporator (°F)	Superheat Set Point @ Bulb (°F)	Discharge Air (°F)	Return Air (°F)	Discharge Air Velocity[4] (FPM)
ONEMZ	1800[3]	Std.	0	3-5	11	22	120

[2] BTUHs/case listed are for parallel operation. Conventional ratings may be approximated by multiplying listed rating by 1.04.

[3] High efficiency fans reduce refrigeration load by 96 BTUHs/fan.

[4] Average discharge air velocity at peak of defrost.

Defrost Controls

Model	Defrosts Per Day	Run-Off Time (min)	Electric Defrost		Timed Off Defrost		Hot Gas Defrost		Reverse Air Defrost	
			Fail-safe (min)	Termination Temp. (°F)	Fail-safe (min)	Termination Temp. (°F)	Fail-safe (min)	Termination Temp. (°F)	Fail-safe (min)	Termination Temp. (°F)
ONEMZ	2	13-15	45	47	- - -	- - -	20	60	- - -	- - -

Medium Temperature Defrost Schedule

No. Per Day	Hours
1	12 midnight
2	12 am - 12 pm
3	6 am - 2 pm - 10 pm
4	12 - 6 am - 12 - 6 pm

All measurements are taken per ARI 1200 - 2002 specifications.

NSF COMPONENT
c UL us
Hill PHOENIX EXCELLENCE
A DOVER COMPANY

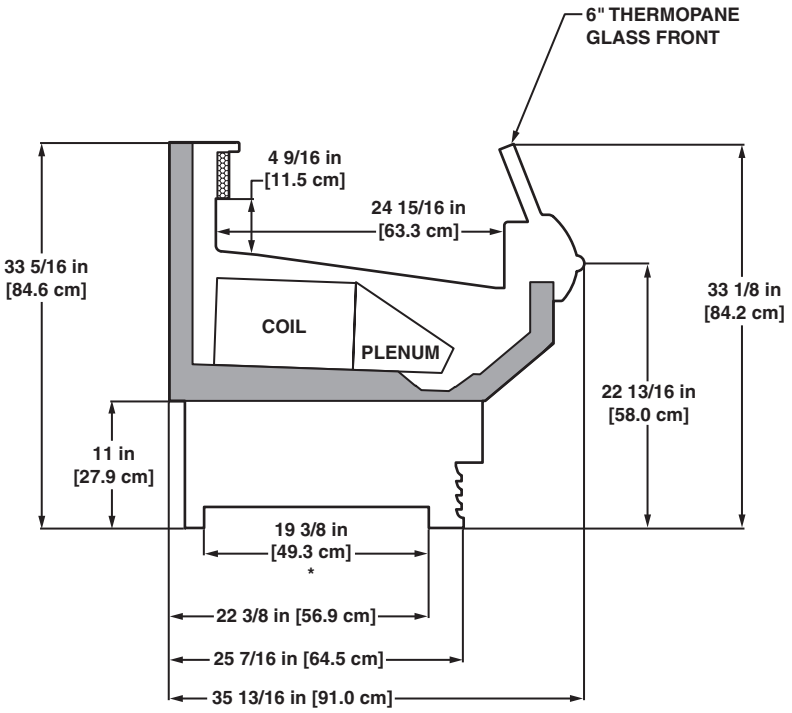

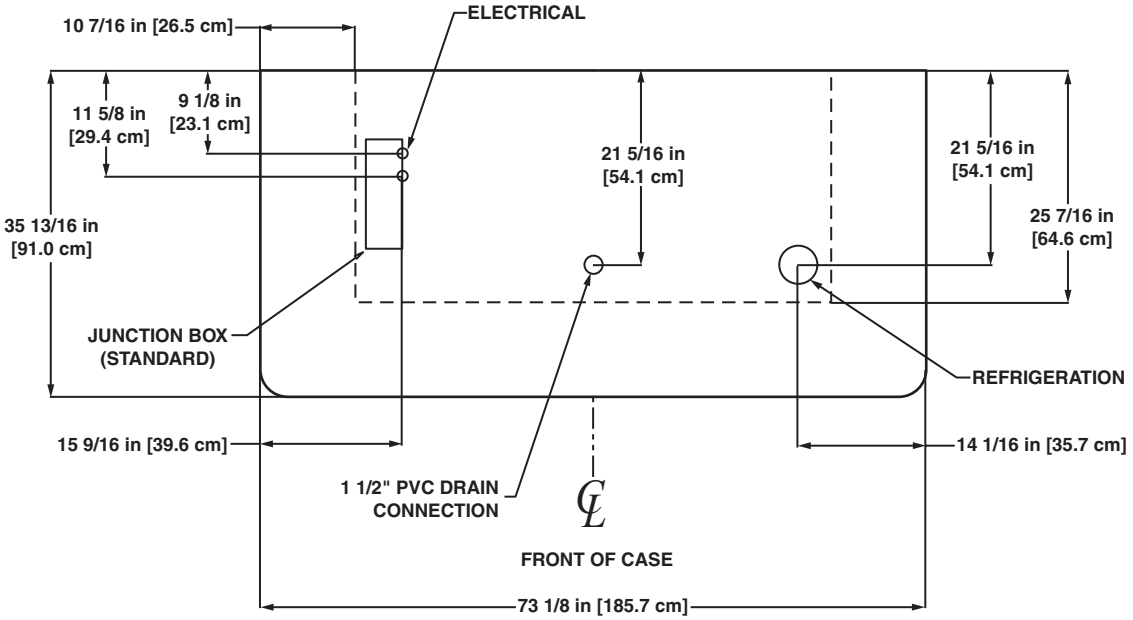

NOTES:

* STUB-UP AREA

• SUCTION LINE - 7/8", LIQUID LINE - 3/8"

The ONEMZs shown below are unitized with two ONMZ-8'cases with standard rear sills, and thermopane glass fronts.

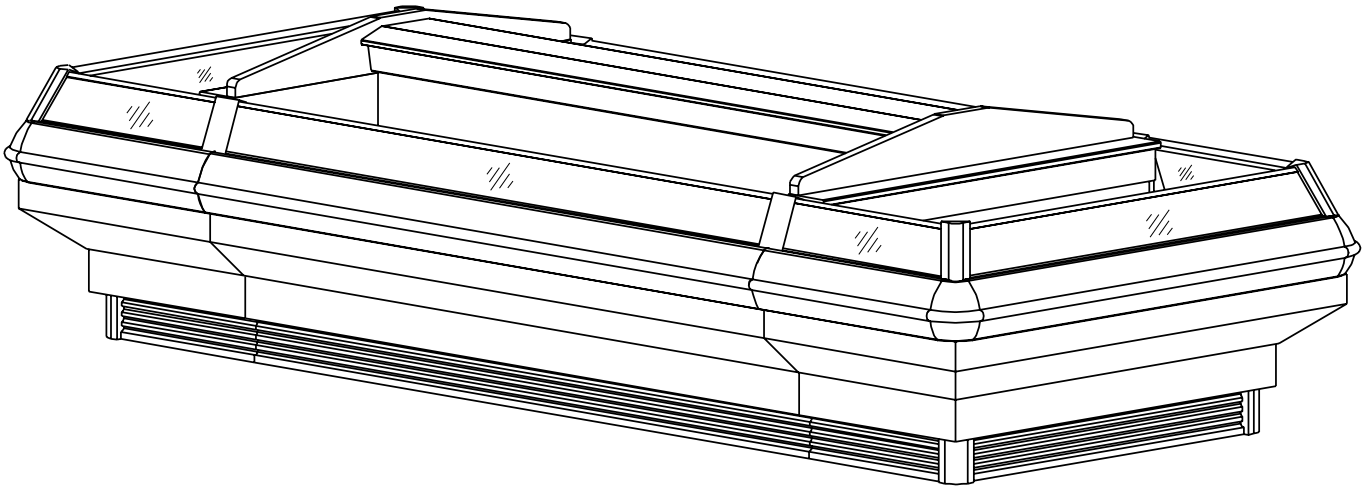

The ONEMZs shown below are unitized with two ONMZ-8'cases with standard rear sills, and thermopane glass fronts.

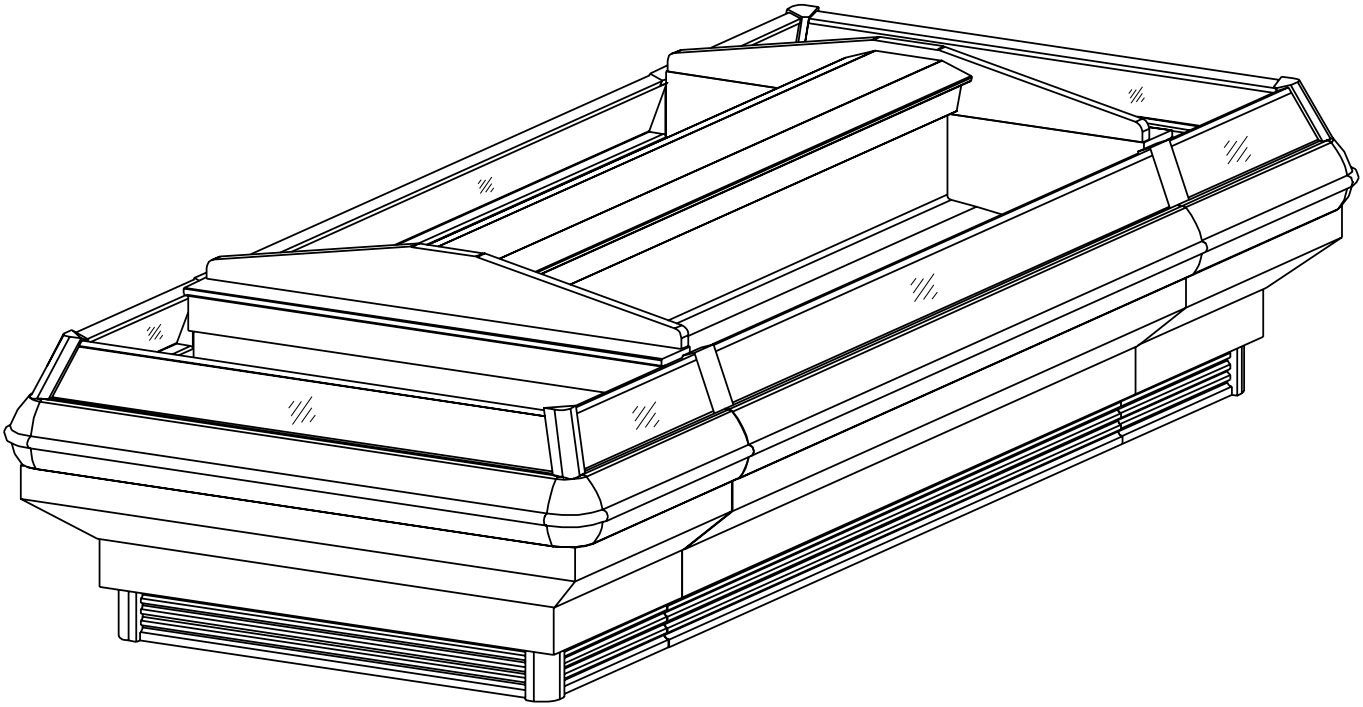

Single Deck Deli/Meat End Cap Merchandiser
OEM

Electrical Data

Model	Fans per Case	Standard Fans		High Efficiency Fans		Anti-Condensate Heaters		Defrost Heaters			
		120 Volts		120 Volts		120 Volts		208 Volts		240 Volts	
		Amps	Watts	Amps	Watts	Amps	Watts	Amps	Watts	Amps	Watts
OEM	2	1.00	60	0.15	9.2	0.35	42	2.88	600	3.33	798

Lighting Data

Model	Bulbs per Row	Bulb Length	Typical per Light Row		Maximum Lighting	
			120 Volts		120 Volts	
			Amps	Watts	Amps	Watts
OEM	2	3′	- - -[1]	- - -	- - -	- - -

[1] NOTE: - - - not an option on this case model.

Guidelines & Control Settings

Model	BTUH/cs[2]	Coil Type	Evaporator (°F)	Superheat Set Point @ Bulb (°F)	Discharge Air (°F)	Return Air (°F)	Discharge Air Velocity[4] (FPM)
OEM	2918[3]	Enh.	22	6-8	29	37	232

[2] BTUHs/case listed are for parallel operation. Conventional ratings may be approximated by multiplying listed rating by 1.04.

[3] High efficiency fans reduce refrigeration load by 96 BTUHs/fan.

[4] Average discharge air velocity at peak of defrost.

Defrost Controls

Model	Defrosts Per Day	Run-Off Time (min)	Electric Defrost		Timed Off Defrost		Hot Gas Defrost		Reverse Air Defrost	
			Fail-safe (min)	Termination Temp. (°F)	Fail-safe (min)	Termination Temp. (°F)	Fail-safe (min)	Termination Temp. (°F)	Fail-safe (min)	Termination Temp. (°F)
OEM	2	6-8	40	49	70	47	26	45	- - -	- - -

Medium Temperature Defrost Schedule

No. Per Day	Hours
1	12 midnight
2	12 am - 12 pm
3	6 am - 2 pm - 10 pm
4	12 - 6 am - 12 - 6 pm

All measurements are taken per ARI 1200 - 2002 specifications.

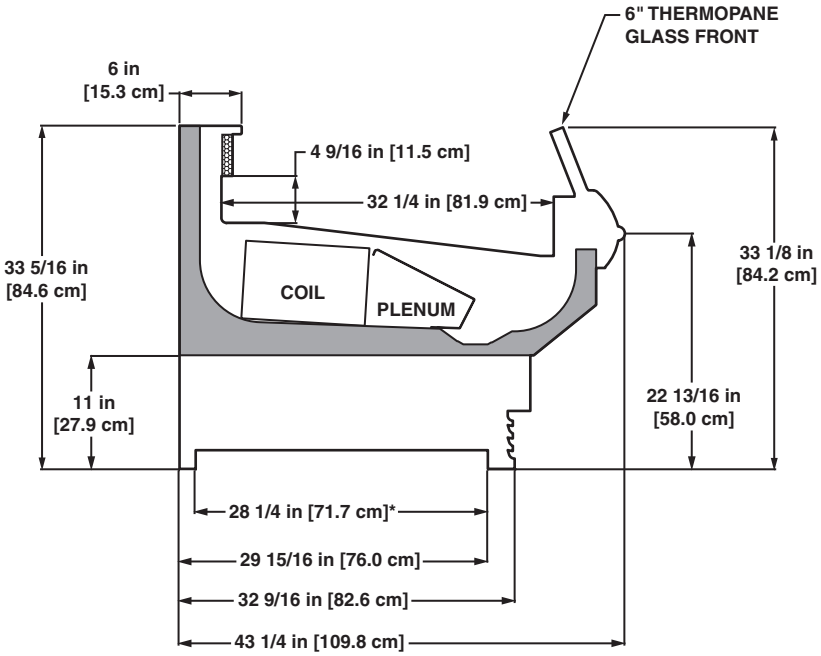

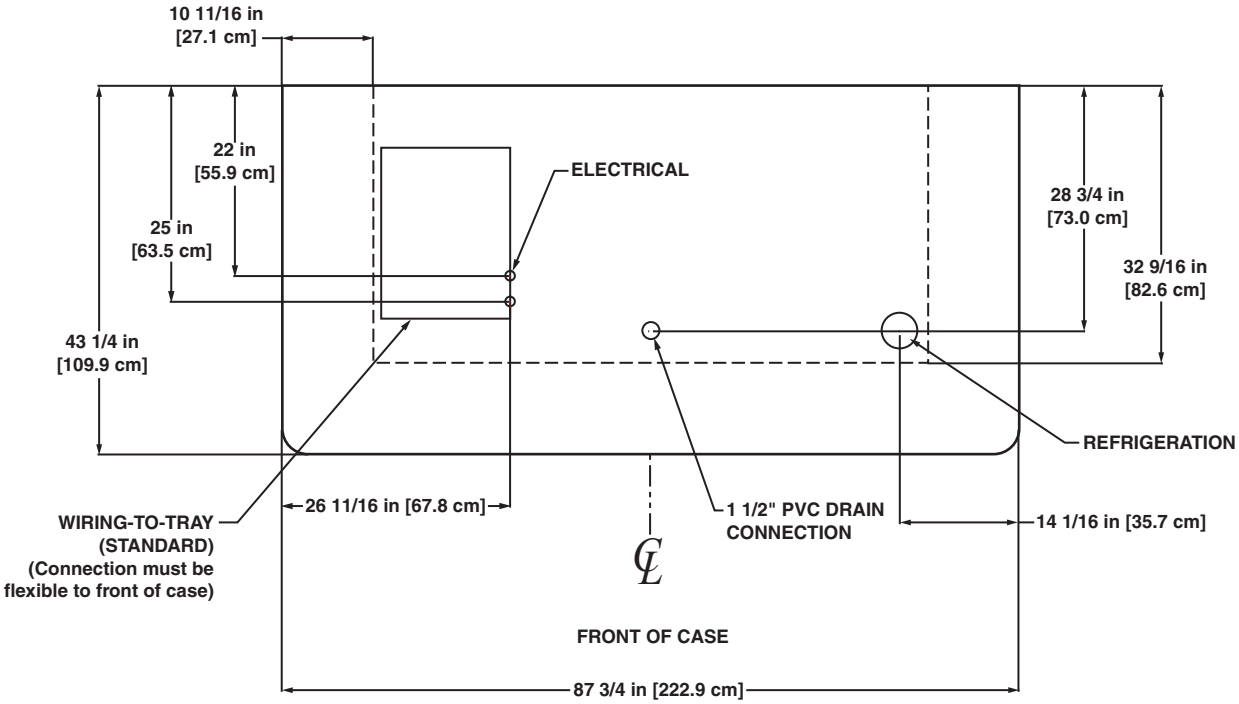

NOTES:

* STUB-UP AREA

• SUCTION LINE - 7/8", LIQUID LINE - 3/8"

The OEMs shown below are unitized with two O3UM-8'cases with lighted rear sills and thermo-pane glass fronts.

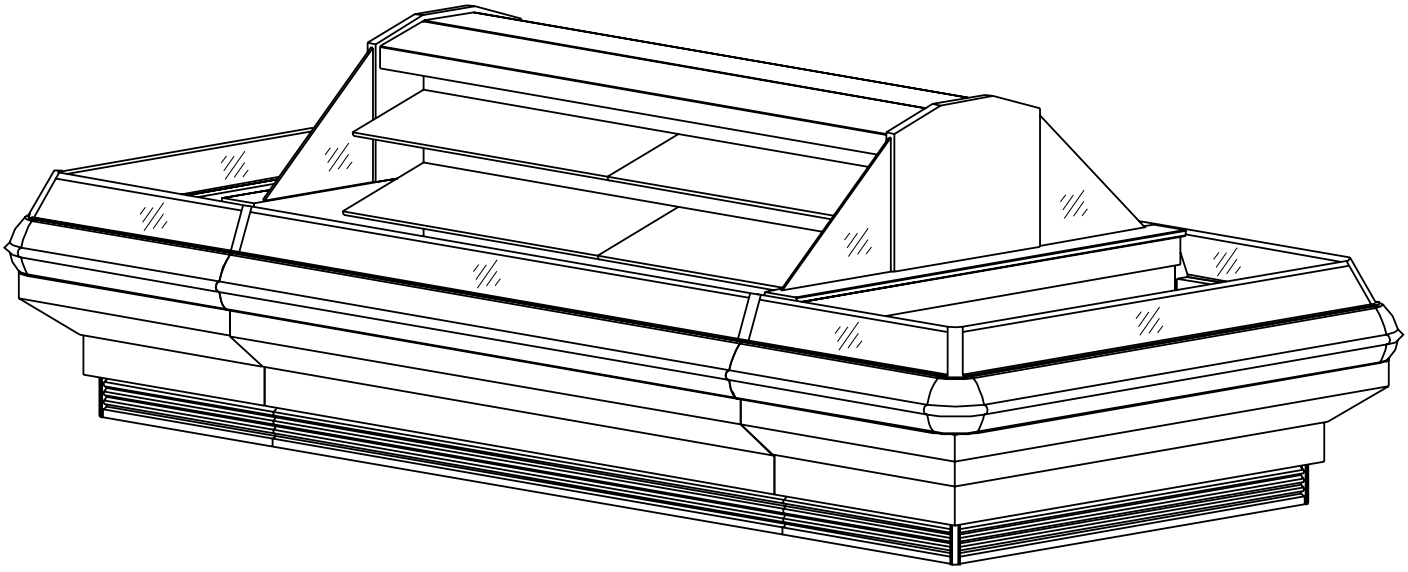

The OEMs shown below are unitized with two O3UM-8'cases with lighted rear sills and thermo-pane glass fronts.

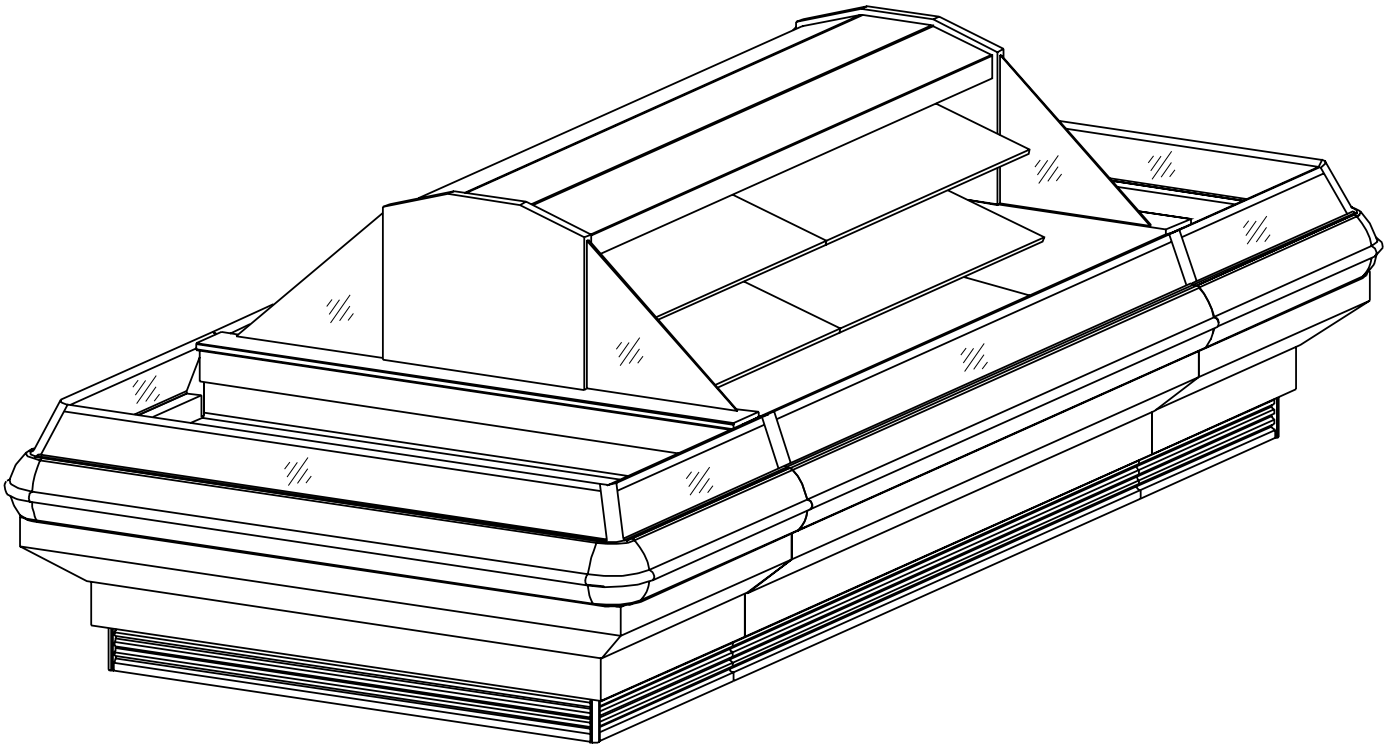

Narrow Multi-Deck Deli/Meat End Cap Merchandiser

ON3EM

Electrical Data

Model	Fans per Case	Standard Fans		High Efficiency Fans		Anti-Condensate Heaters		Defrost Heaters			
		120 Volts		120 Volts		120 Volts		208 Volts		240 Volts	
		Amps	Watts	Amps	Watts	Amps	Watts	Amps	Watts	Amps	Watts
ON3EM	2	1.00	60	0.23	14	1.89	227	2.31	480	2.66	640

Lighting Data

Model	Bulbs per Row	Bulb Length	Typical per Light Row		Maximum Lighting	
			120 Volts		120 Volts	
			Amps	Watts	Amps	Watts
ON3EM	1	5′	0.28	34	1.13	136

Guidelines & Control Settings

Model	BTUH/cs[1]	Coil Type	Evaporator (°F)	Superheat Set Point @ Bulb (°F)	Discharge Air (°F)	Return Air (°F)	Discharge Air Velocity[3] (FPM)
ON3EM	6000[2]	Enh.	22	6-8	33	45	275

[1] BTUHs/case listed are for parallel operation. Conventional ratings may be approximated by multiplying listed rating by 1.04.

[2] High efficiency fans reduce refrigeration load by 96 BTUHs/fan.

[3] Average discharge air velocity at peak of defrost.

Defrost Controls

Model	Defrosts Per Day	Run-Off Time (min)	Electric Defrost		Timed Off Defrost		Hot Gas Defrost		Reverse Air Defrost	
			Fail-safe (min)	Termination Temp. (°F)	Fail-safe (min)	Termination Temp. (°F)	Fail-safe (min)	Termination Temp. (°F)	Fail-safe (min)	Termination Temp. (°F)
ON3EM	4	6 - 8	40	47	45	45	- - -[4]	- - -	- - -	- - -

[4] NOTE: - - - not an option on this case model.

Medium Temperature Defrost Schedule

No. Per Day	Hours
1	12 midnight
2	12 am - 12 pm
3	6 am - 2 pm - 10 pm
4	12 - 6 am - 12 - 6 pm

All measurements are taken per ARI 1200 - 2002 specifications.

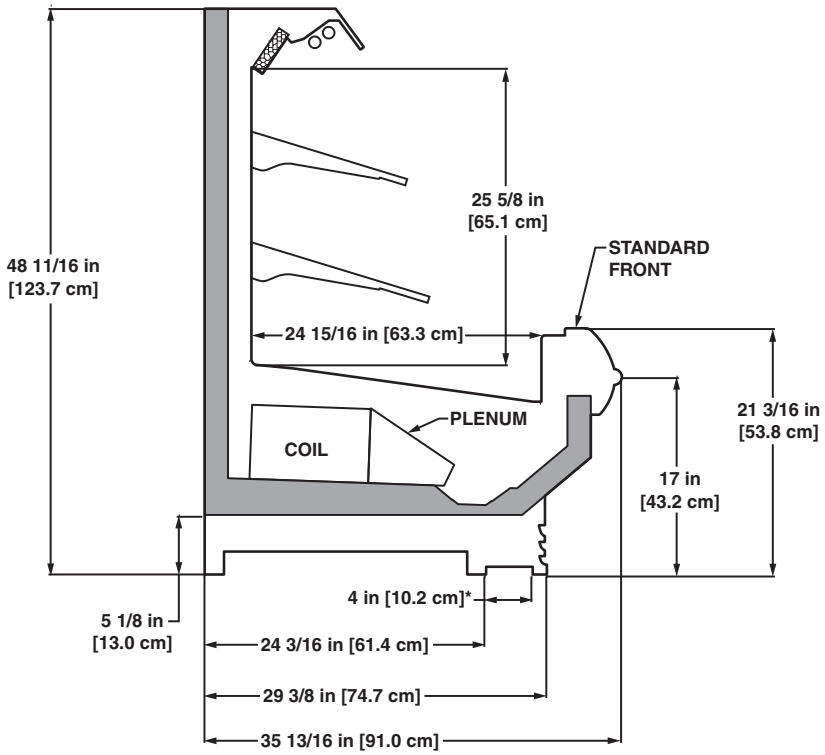

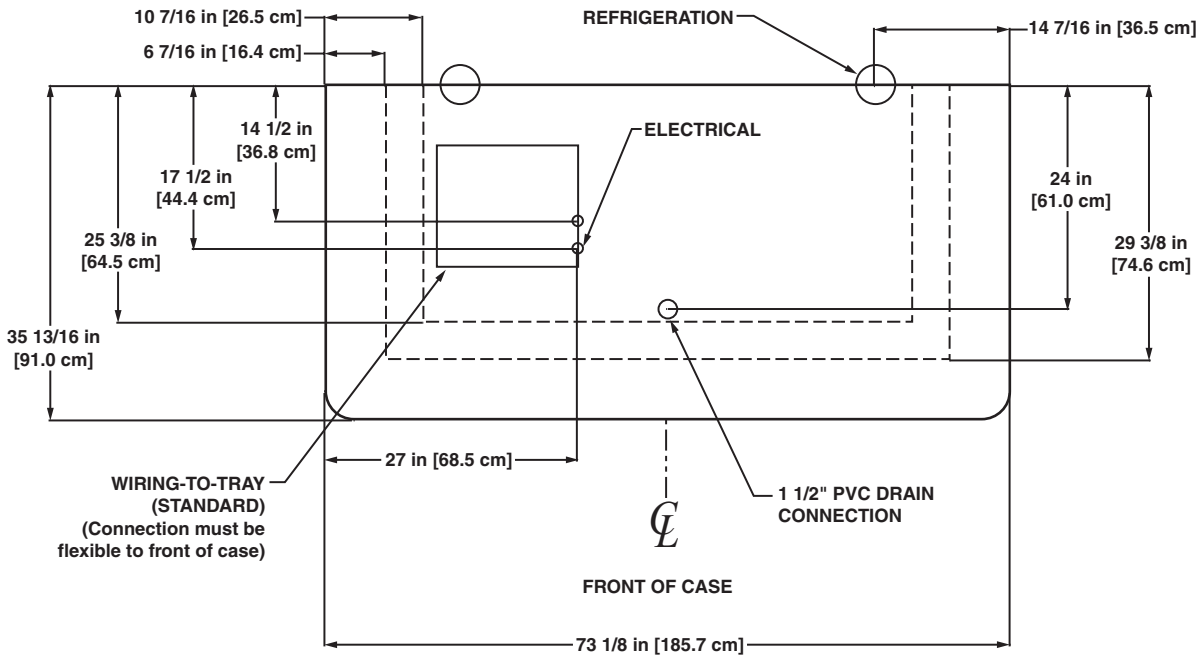

NOTES:

* STUB-UP AREA

- SUCTION LINE - 7/8", LIQUID LINE - 3/8"
- AVAILABLE SHELF SIZES: 10", 12", 14" & 16"

NSF COMPONENT c UL us

A DOVER COMPANY

The ON3EMs shown below are unitized with two ON3UM-8′cases with lighted rear sills, standard fronts, and 14″ & 16″ shelves.

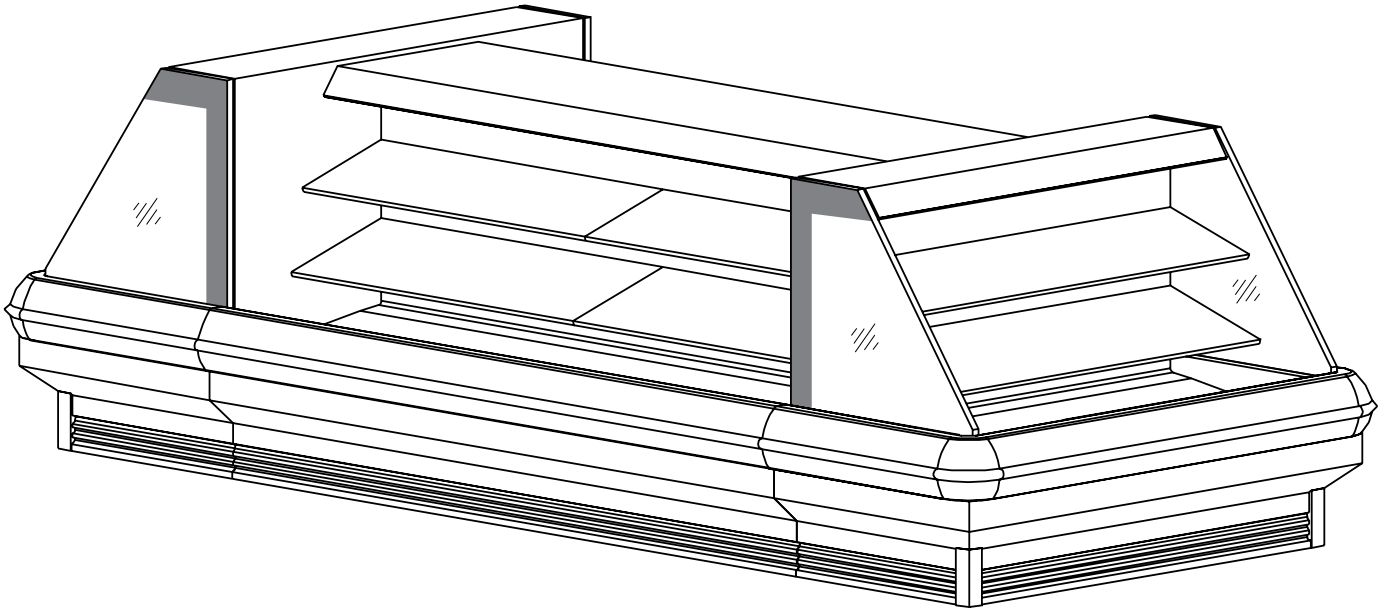

The ON3EMs shown below are unitized with two ON3UM-8′cases with lighted rear sills, standard fronts, and 14″ & 16″ shelves.

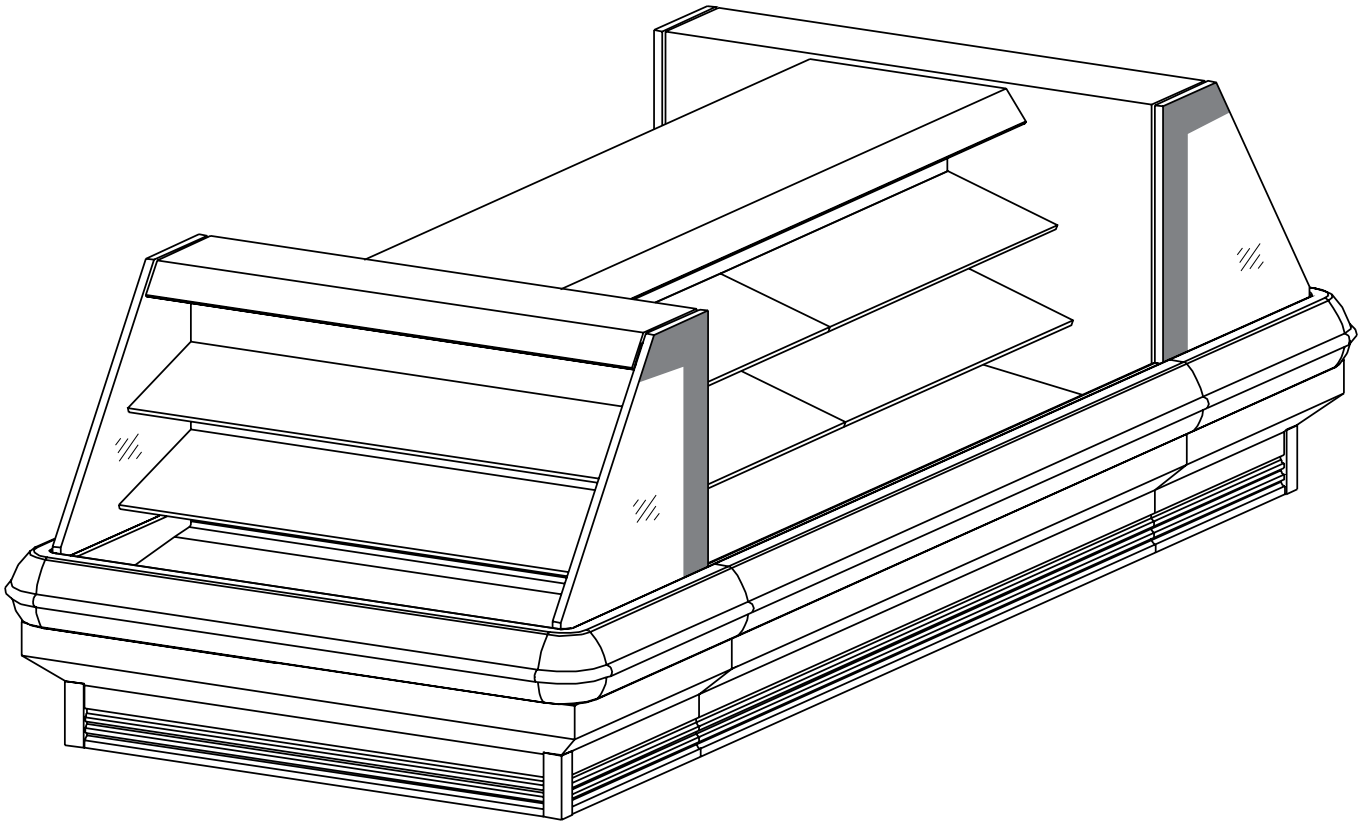

Multi-Deck Deli/Meat End Cap Merchandiser

O3EM

Electrical Data

Model	Fans per Case	Standard Fans		High Efficiency Fans		Anti-Condensate Heaters		Defrost Heaters			
		120 Volts		120 Volts		120 Volts		208 Volts		240 Volts	
		Amps	Watts	Amps	Watts	Amps	Watts	Amps	Watts	Amps	Watts
O3EM	2	1.00	60	0.23	14	1.89	227	2.31	480	2.66	640

Lighting Data

Model	Bulbs per Row	Bulb Length	Typical per Light Row		Maximum Lighting	
			120 Volts		120 Volts	
			Amps	Watts	Amps	Watts
O3EM	2	3′	0.37	44	1.47	176

Guidelines & Control Settings

Model	BTUH/cs[1]	Coil Type	Evaporator (°F)	Superheat Set Point @ Bulb (°F)	Discharge Air (°F)	Return Air (°F)	Discharge Air Velocity[3] (FPM)
O3EM	6900[2]	Enh.	22	6-8	33	45	275

[1] BTUHs/case listed are for parallel operation. Conventional ratings may be approximated by multiplying listed rating by 1.04.

[2] High efficiency fans reduce refrigeration load by 96 BTUHs/fan.

[3] Average discharge air velocity at peak of defrost.

Defrost Controls

Model	Defrosts Per Day	Run-Off Time (min)	Electric Defrost		Timed Off Defrost		Hot Gas Defrost		Reverse Air Defrost	
			Fail-safe (min)	Termination Temp. (°F)	Fail-safe (min)	Termination Temp. (°F)	Fail-safe (min)	Termination Temp. (°F)	Fail-safe (min)	Termination Temp. (°F)
O3EM	4	6 - 8	40	47	45	45	- - -[4]	- - -	- - -	- - -

[4] NOTE: - - - not an option on this case model.

Medium Temperature Defrost Schedule

No. Per Day	Hours
1	12 midnight
2	12 am - 12 pm
3	6 am - 2 pm - 10 pm
4	12 - 6 am - 12 - 6 pm

All measurements are taken per ARI 1200 - 2002 specifications.

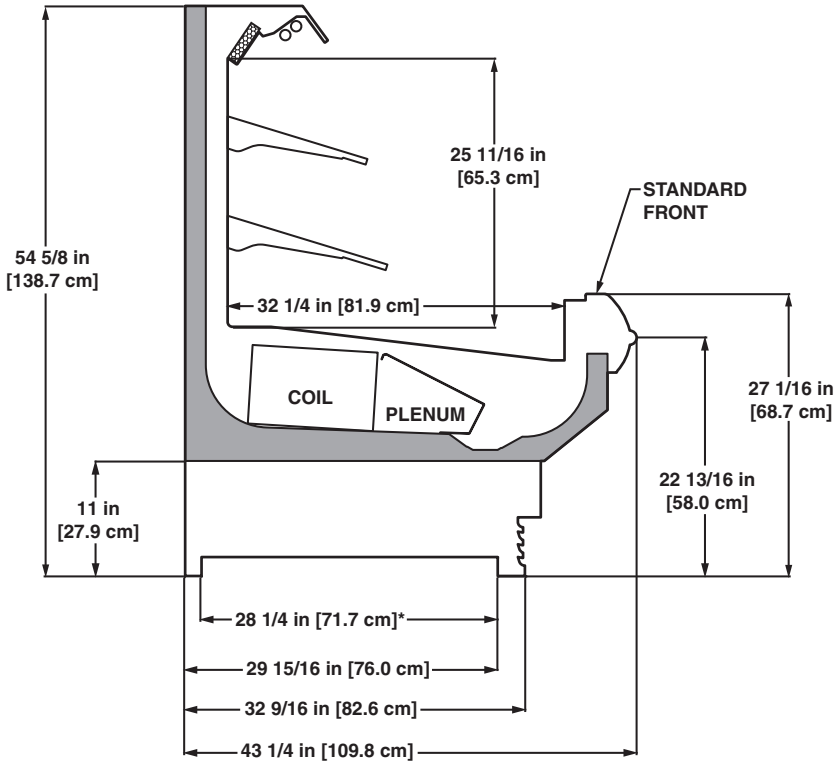

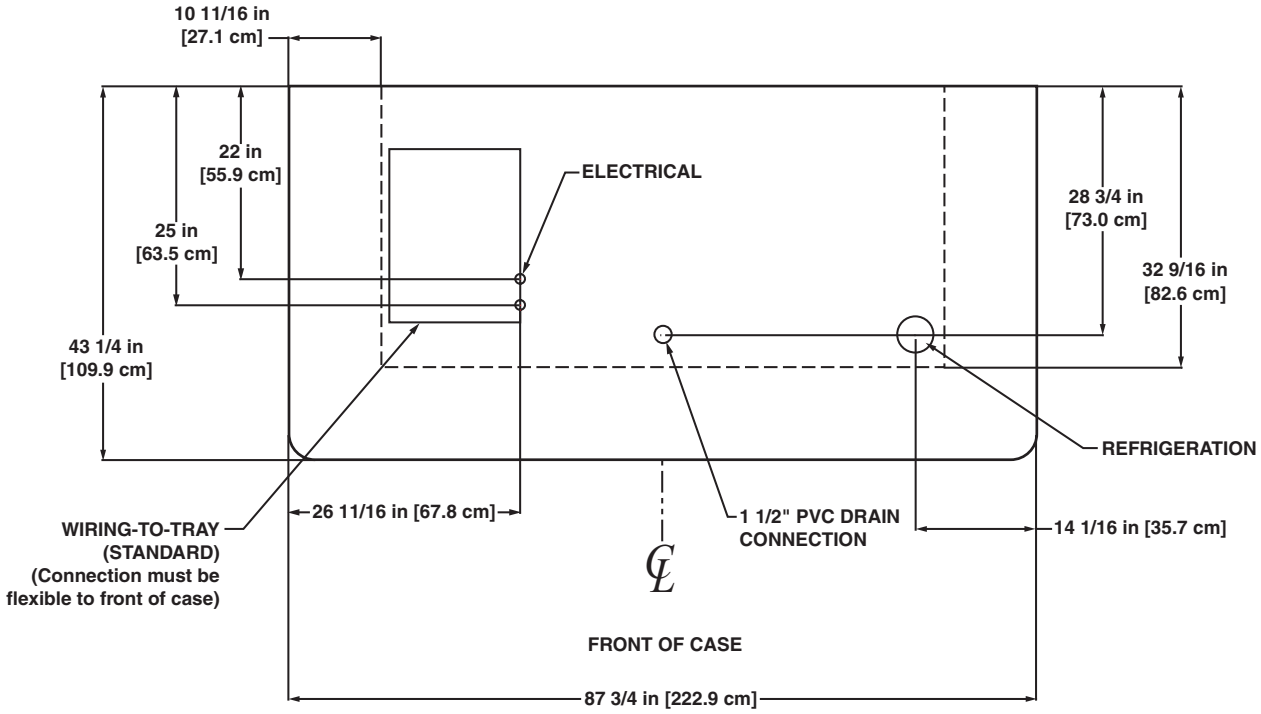

NOTES:

* STUB-UP AREA

- SUCTION LINE - 7/8", LIQUID LINE - 3/8"
- AVAILABLE SHELF SIZES: 10", 12", 14", 16" & 18"

NSF COMPONENT
c UL us
A DOVER COMPANY

The O3EMs shown below are unitized with two O3UM-8'cases with lighted rear sills, standard fronts, and 14" & 16" shelves.

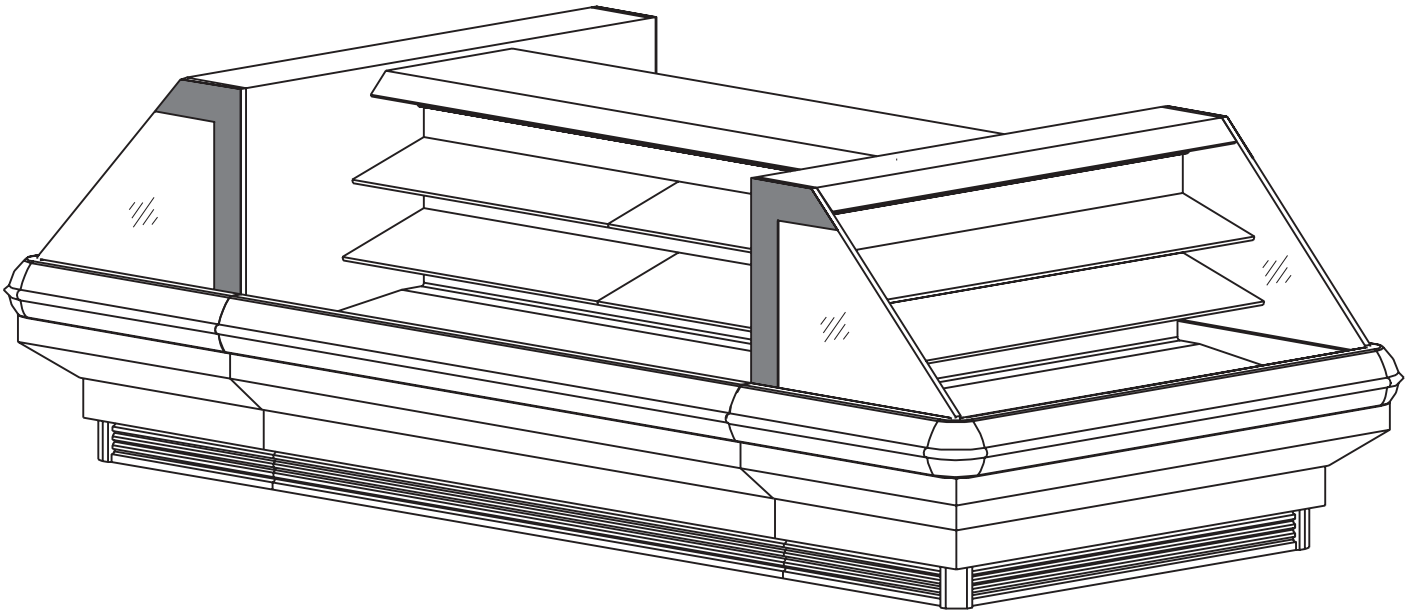

The O3EMs shown below are unitized with two O3UM-8'cases with lighted rear sills, standard fronts, and 14" & 16" shelves.

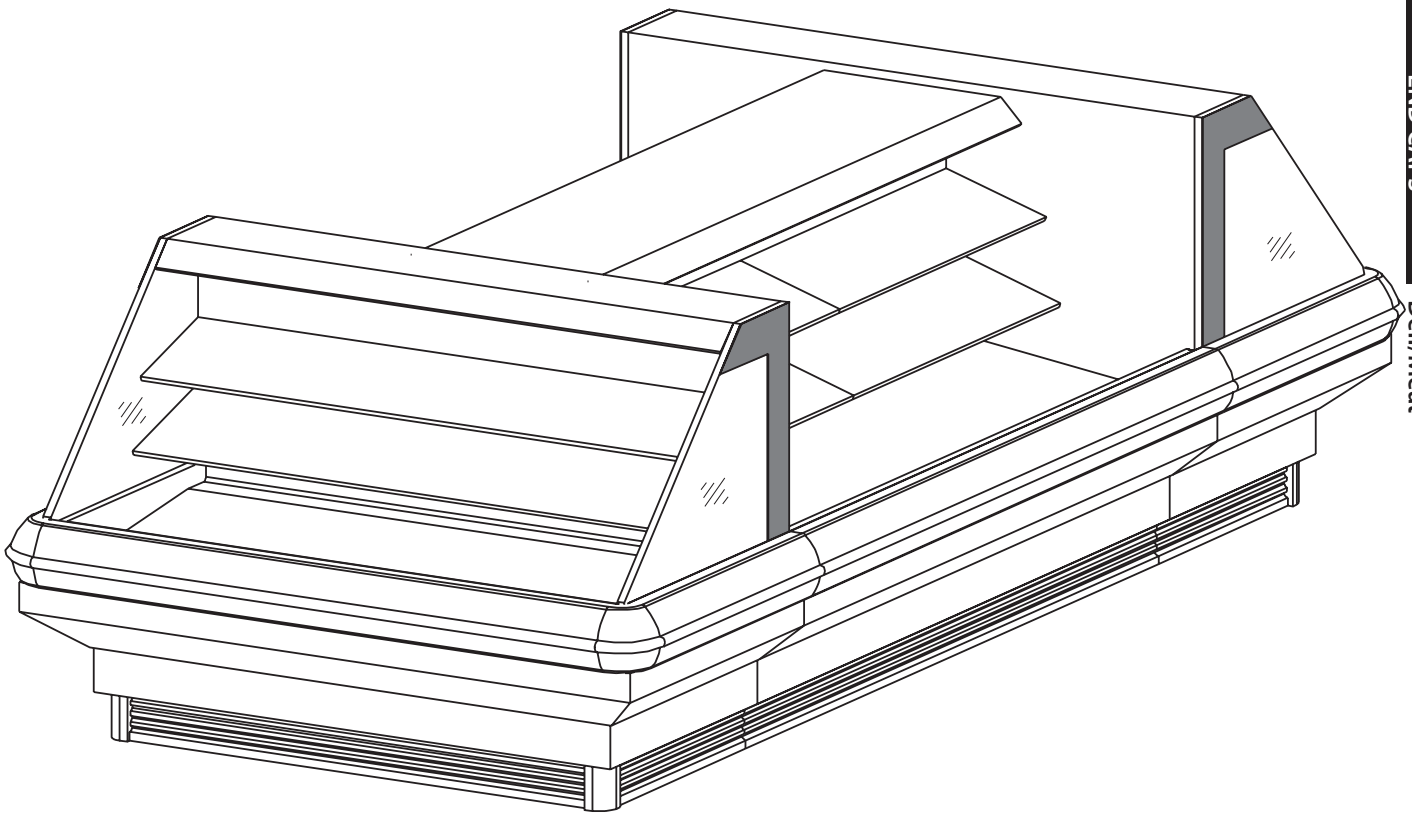

Narrow Multi-Deck Deli/Meat End Cap Merchandiser

ON3.5EM

Electrical Data

Model	Fans per Case	Standard Fans		High Efficiency Fans		Anti-Condensate Heaters		Defrost Heaters			
		120 Volts		120 Volts		120 Volts		208 Volts		240 Volts	
		Amps	Watts	Amps	Watts	Amps	Watts	Amps	Watts	Amps	Watts
ON3.5EM	2	1.00	60	0.23	14	1.89	227	2.31	480	2.66	640

Lighting Data

Model	Bulbs per Row	Bulb Length	Typical per Light Row		Maximum Lighting	
			120 Volts		120 Volts	
			Amps	Watts	Amps	Watts
ON3.5EM	1	5′	0.28	34	1.42	170

Guidelines & Control Settings

Model	BTUH/cs[1]	Coil Type	Evaporator (°F)	Superheat Set Point @ Bulb (°F)	Discharge Air (°F)	Return Air (°F)	Discharge Air Velocity[3] (FPM)
ON3.5EM	7100[2]	Enh.	22	6-8	33	45	275

[1] BTUHs/case listed are for parallel operation. Conventional ratings may be approximated by multiplying listed rating by 1.04.

[2] High efficiency fans reduce refrigeration load by 96 BTUHs/fan.

[3] Average discharge air velocity at peak of defrost.

Defrost Controls

Model	Defrosts Per Day	Run-Off Time (min)	Electric Defrost		Timed Off Defrost		Hot Gas Defrost		Reverse Air Defrost	
			Fail-safe (min)	Termination Temp. (°F)	Fail-safe (min)	Termination Temp. (°F)	Fail-safe (min)	Termination Temp. (°F)	Fail-safe (min)	Termination Temp. (°F)
ON3.5EM	4	6 - 8	40	47	45	45	- - -[4]	- - -	- - -	- - -

[4] NOTE: - - - not an option on this case model.

Medium Temperature Defrost Schedule

No. Per Day	Hours
1	12 midnight
2	12 am - 12 pm
3	6 am - 2 pm - 10 pm
4	12 - 6 am - 12 - 6 pm

All measurements are taken per CRMA specifications.

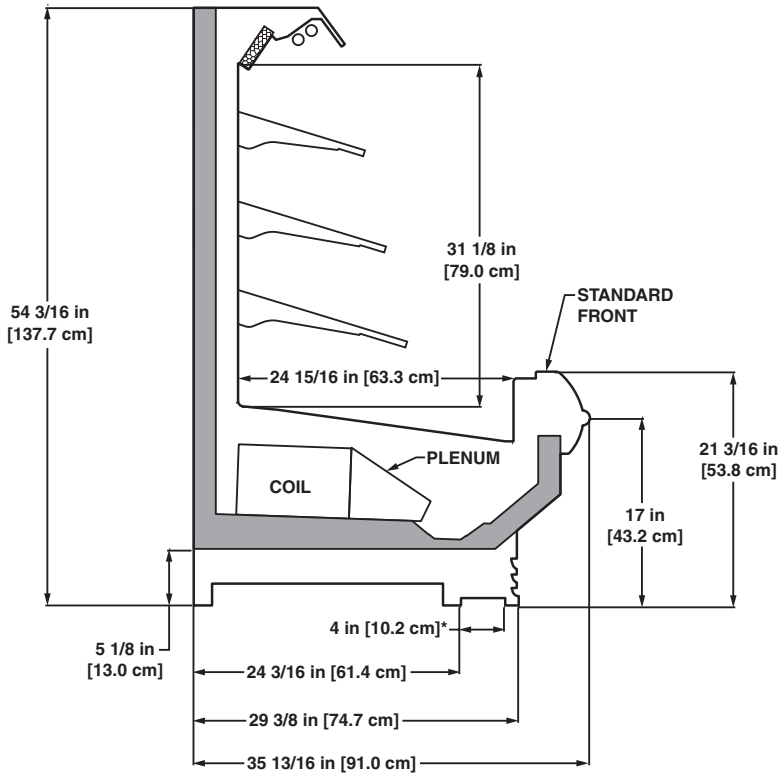

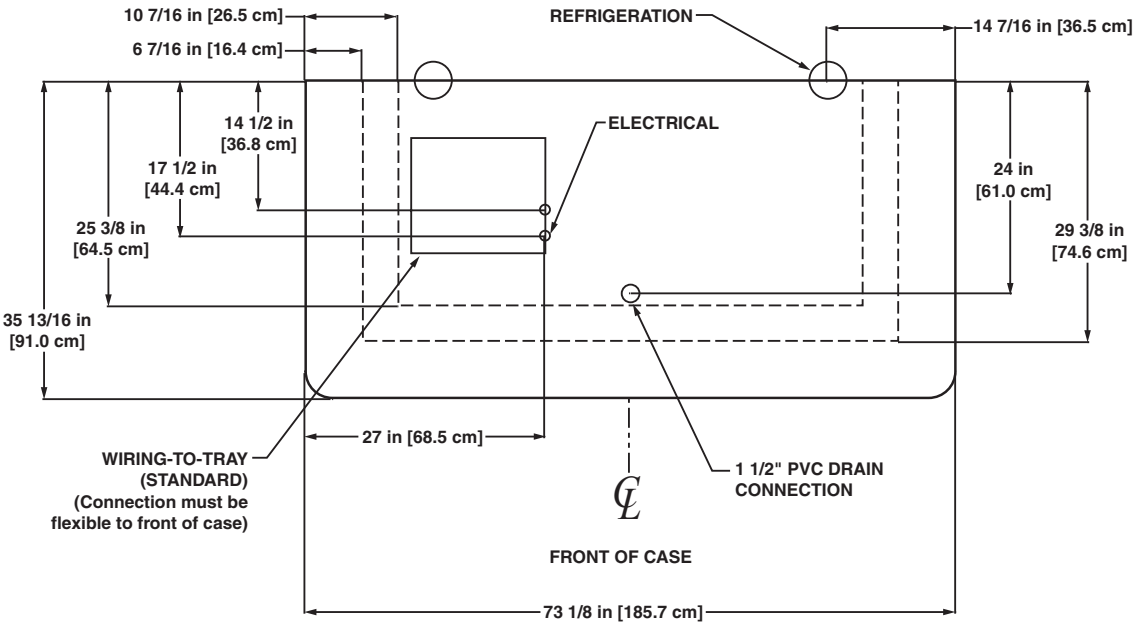

NOTES:

* STUB-UP AREA

- SUCTION LINE - 7/8", LIQUID LINE - 3/8"
- AVAILABLE SHELF SIZES: 10", 12", 14" & 16"

NSF COMPONENT

The ON3.5EMs shown below are unitized with two ON3.5UM-8′ cases with lighted rear sills, standard fronts, and 12, 14″ & 16″ shelves.

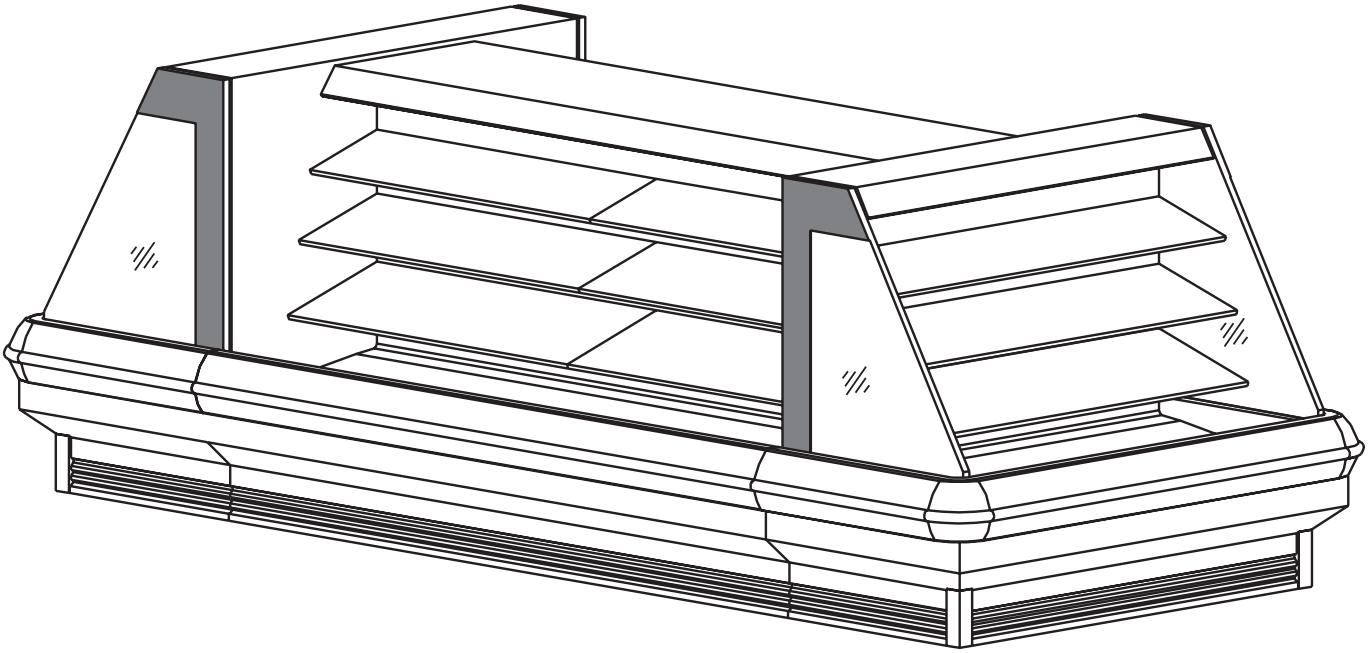

The ON3.5EMs shown below are unitized with two ON3.5UM-8' cases with lighted rear sills, standard fronts, and 12, 14" & 16" shelves.

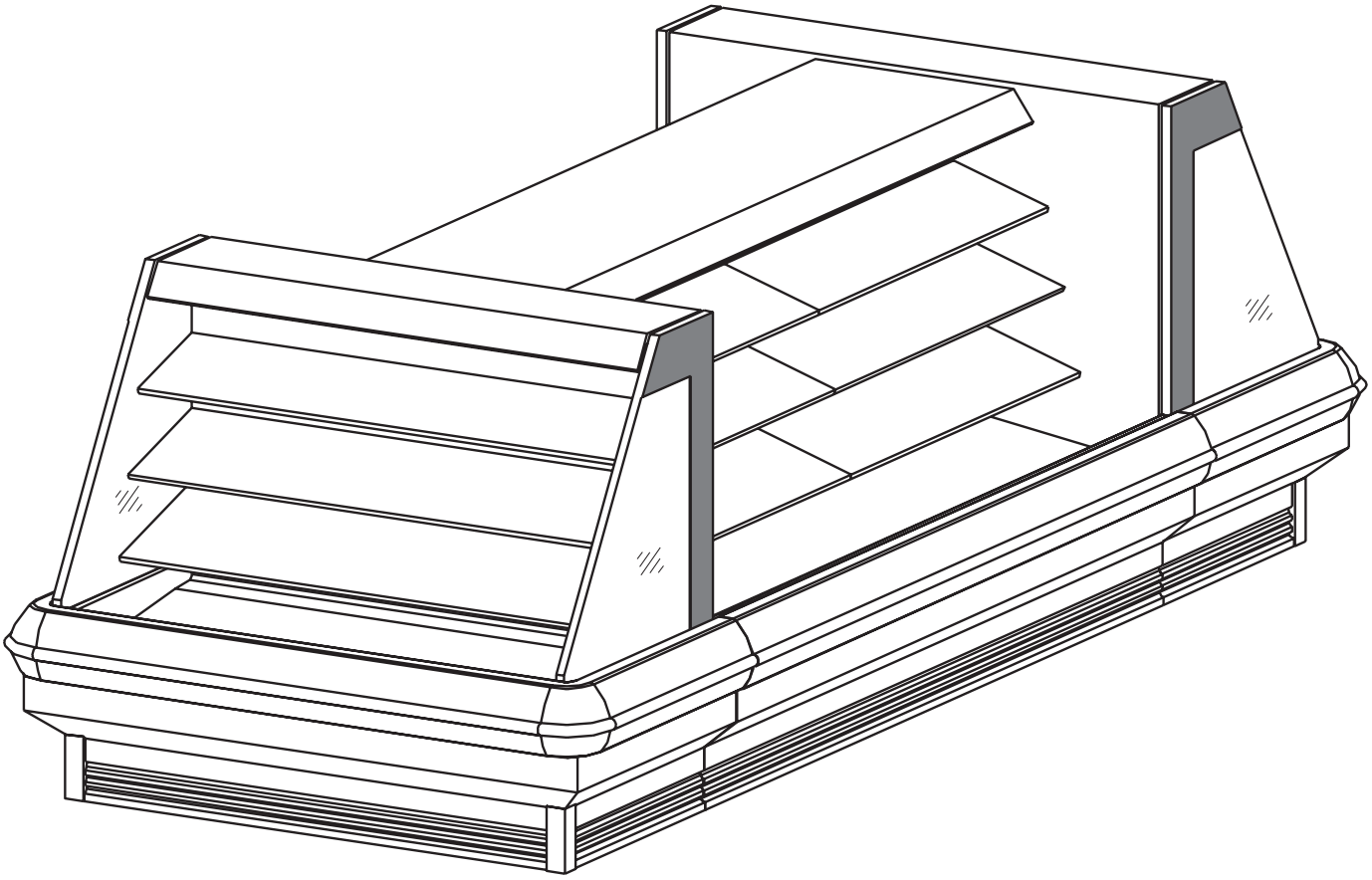

Multi-Deck Deli/Meat End Cap Merchandiser

O3.5EM

Electrical Data

Model	Fans per Case	Standard Fans		High Efficiency Fans		Anti-Condensate Heaters		Defrost Heaters			
		120 Volts		120 Volts		120 Volts		208 Volts		240 Volts	
		Amps	Watts	Amps	Watts	Amps	Watts	Amps	Watts	Amps	Watts
O3.5EM	2	1.00	60	0.39	23.4	1.89	227	2.31	480	2.66	640

Lighting Data

Model	Bulbs per Row	Bulb Length	Typical per Light Row		Maximum Lighting	
			120 Volts		120 Volts	
			Amps	Watts	Amps	Watts
O3.5EM	2	3'	0.37	44	1.83	220

Guidelines & Control Settings

Model	BTUH/cs[1]	Coil Type	Evaporator (°F)	Superheat Set Point @ Bulb (°F)	Discharge Air (°F)	Return Air (°F)	Discharge Air Velocity[3] (FPM)
O3.5EM	8709[2]	Enh.	22	6-8	33	45	275

[1] BTUHs/case listed are for parallel operation. Conventional ratings may be approximated by multiplying listed rating by 1.04.

[2] High efficiency fans reduce refrigeration load by 96 BTUHs/fan.

[3] Average discharge air velocity at peak of defrost.

Defrost Controls

Model	Defrosts Per Day	Run-Off Time (min)	Electric Defrost		Timed Off Defrost		Hot Gas Defrost		Reverse Air Defrost	
			Fail-safe (min)	Termination Temp. (°F)	Fail-safe (min)	Termination Temp. (°F)	Fail-safe (min)	Termination Temp. (°F)	Fail-safe (min)	Termination Temp. (°F)
O3.5EM	4	6 - 8	40	47	45	45	- - -[4]	- - -	- - -	- - -

[4] NOTE: - - - not an option on this case model.

Medium Temperature Defrost Schedule

No. Per Day	Hours
1	12 midnight
2	12 am - 12 pm
3	6 am - 2 pm - 10 pm
4	12 - 6 am - 12 - 6 pm

All measurements are taken per ARI 1200 - 2002 specifications.

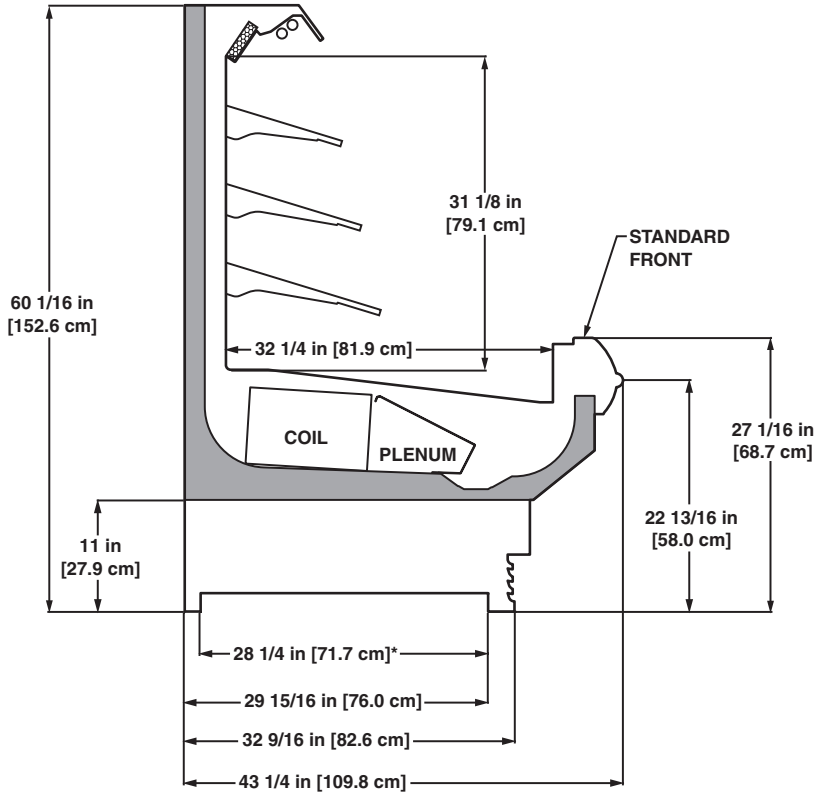

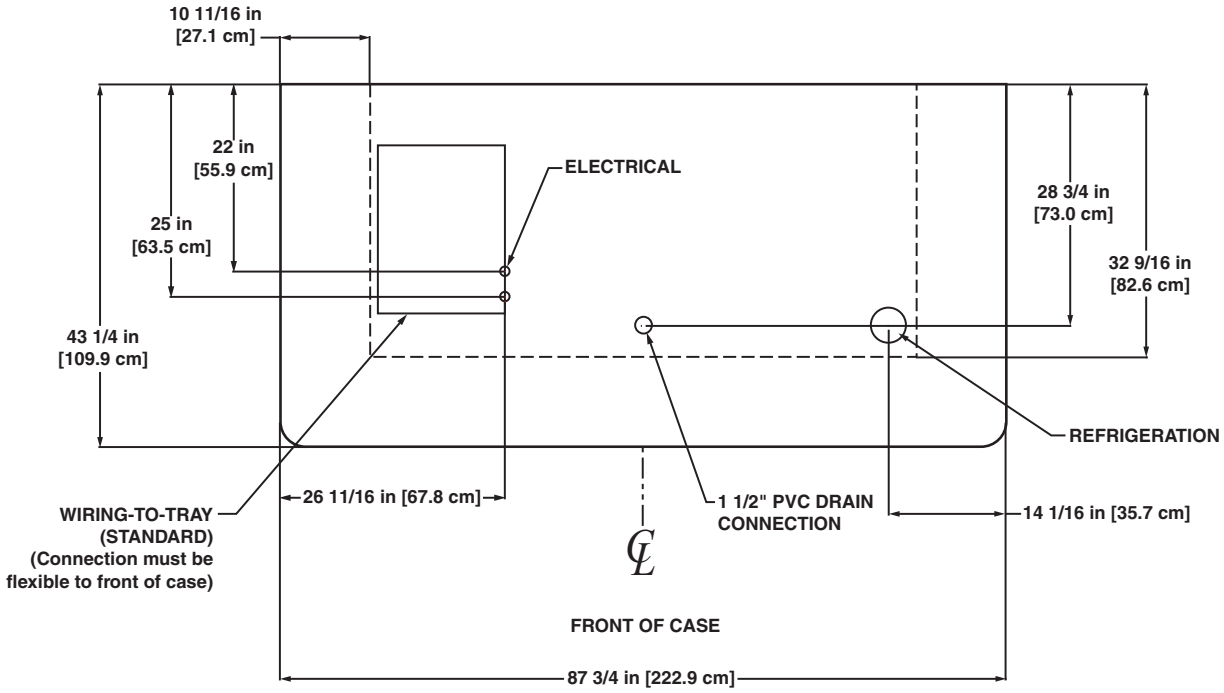

NOTES:

* STUB-UP AREA

- SUCTION LINE - 7/8", LIQUID LINE - 3/8"
- AVAILABLE SHELF SIZES: 10", 12", 14", 16" & 18"

NSF COMPONENT c UL us

A DOVER COMPANY

The O3.5EMs shown below are unitized with two O3.5UM-8'cases with lighted rear sills, standard fronts, and 12", 14" & 16" shelves.

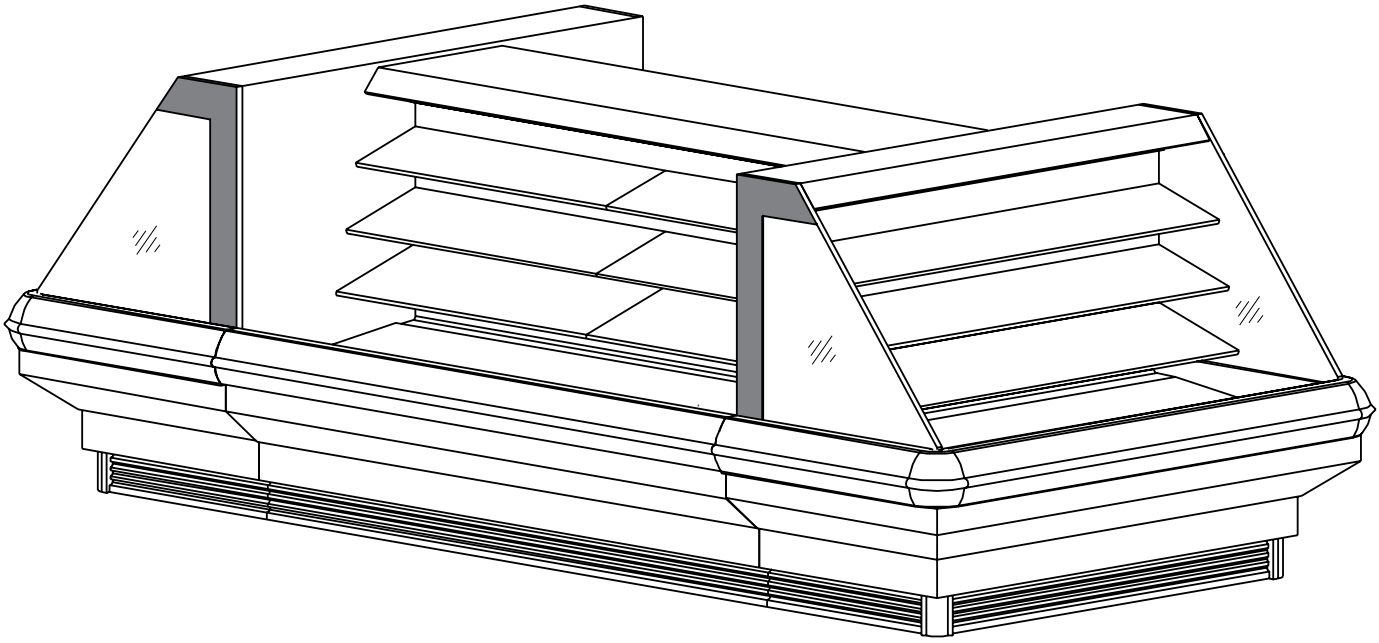

The O3.5EMs shown below are unitized with two O3.5UM-8'cases with lighted rear sills, standard fronts, and 12", 14" & 16" shelves.

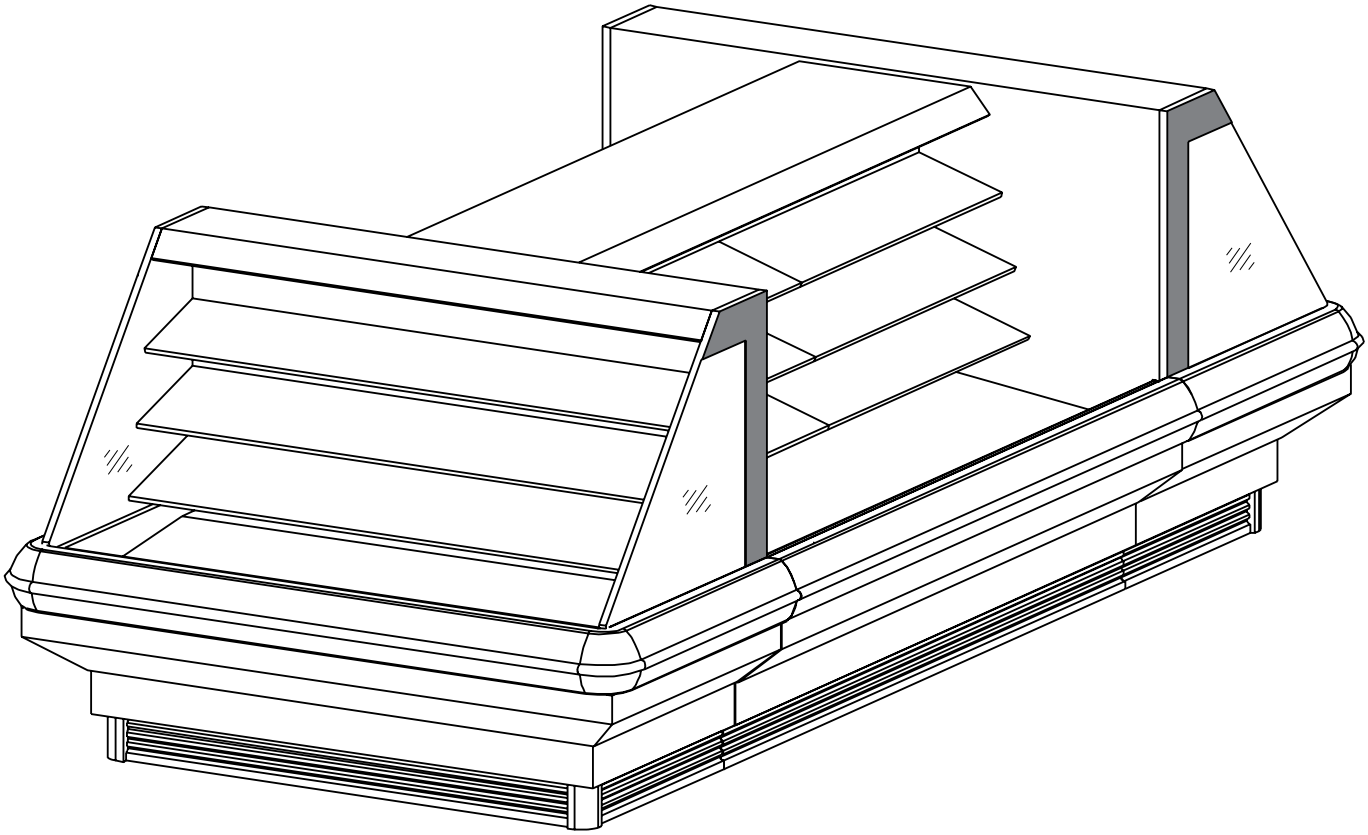

Narrow Multi-Deck Deli End Cap Merchandiser

ON4EM

Electrical Data

Model	Fans per Case	Standard Fans		High Efficiency Fans		Anti-Condensate Heaters		Defrost Heaters			
		120 Volts		120 Volts		120 Volts		208 Volts		240 Volts	
		Amps	Watts	Amps	Watts	Amps	Watts	Amps	Watts	Amps	Watts
ON4EM	2	1.00	60	0.23	14	0.99	119	2.31	480	2.66	640

Lighting Data

Model	Bulbs per Row	Bulb Length	Typical per Light Row		Maximum Lighting	
			120 Volts		120 Volts	
			Amps	Watts	Amps	Watts
ON4EM	1	5′	0.28	34	1.42	170

Guidelines & Control Settings

Model	BTUH/cs[1]	Coil Type	Evaporator (°F)	Superheat Set Point @ Bulb (°F)	Discharge Air (°F)	Return Air (°F)	Discharge Air Velocity[3] (FPM)
ON4EM	6430[2]	Enh.	22	6-8	30	40	280

[1] BTUHs/case listed are for parallel operation. Conventional ratings may be approximated by multiplying listed rating by 1.04.

[2] High efficiency fans reduce refrigeration load by 96 BTUHs/fan.

[3] Average discharge air velocity at peak of defrost.

Defrost Controls

Model	Defrosts Per Day	Run-Off Time (min)	Electric Defrost		Timed Off Defrost		Hot Gas Defrost		Reverse Air Defrost	
			Fail-safe (min)	Termination Temp. (°F)	Fail-safe (min)	Termination Temp. (°F)	Fail-safe (min)	Termination Temp. (°F)	Fail-safe (min)	Termination Temp. (°F)
ON4EM	6	6 - 8	40	47	45	47	- - -[4]	- - -	- - -	- - -

[4] NOTE: - - - not an option on this case model.

Medium Temperature Defrost Schedule

No. Per Day	Hours
1	12 midnight
2	12 am - 12 pm
3	6 am - 2 pm - 10 pm
4	12 - 6 am - 12 - 6 pm

All measurements are taken per ARI 1200 - 2002 specifications.

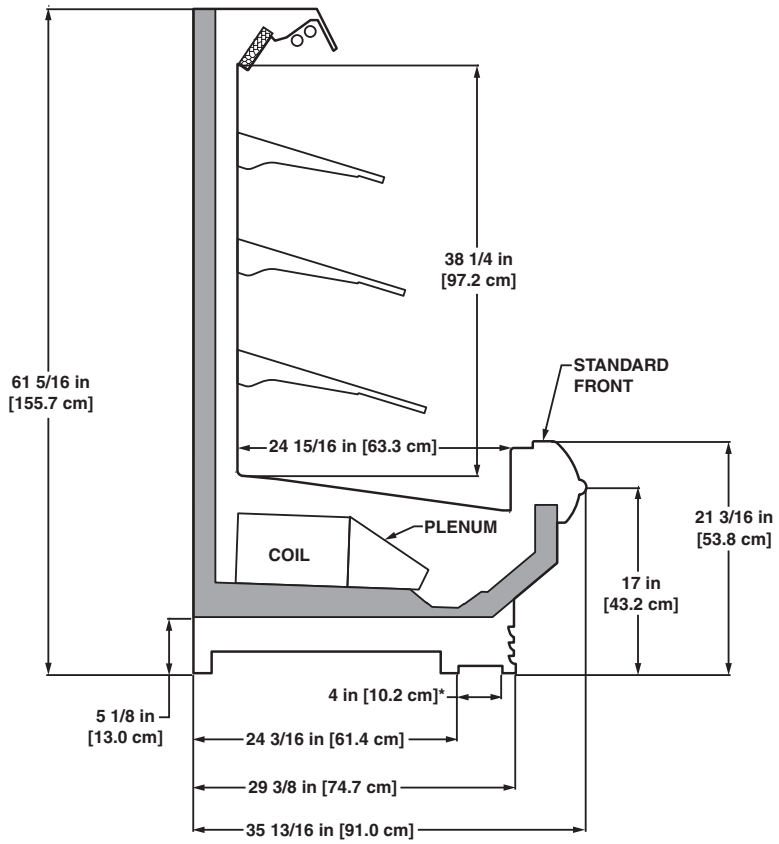

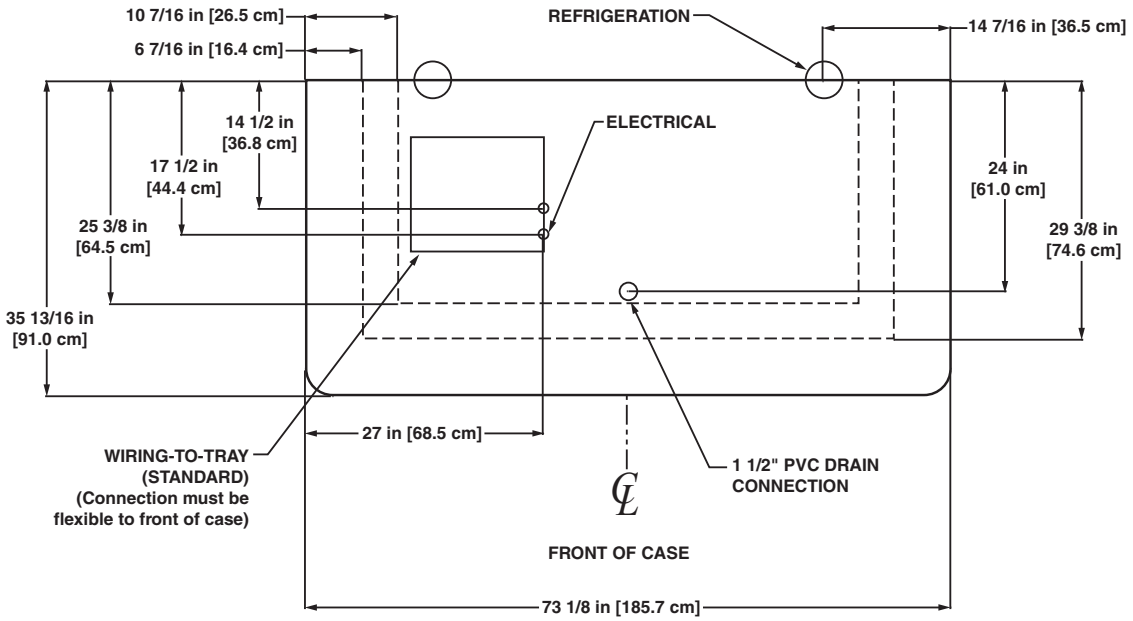

NOTES:

* STUB-UP AREA

- SUCTION LINE - 7/8", LIQUID LINE - 1/2"
- AVAILABLE SHELF SIZES: 10", 12", 14" & 16"

COMPONENT

A DOVER COMPANY

The ON4EMs shown below are unitized with two ON4UM-8' cases with lighted rear sills, standard fronts, and 14", 16" & 18" shelves.

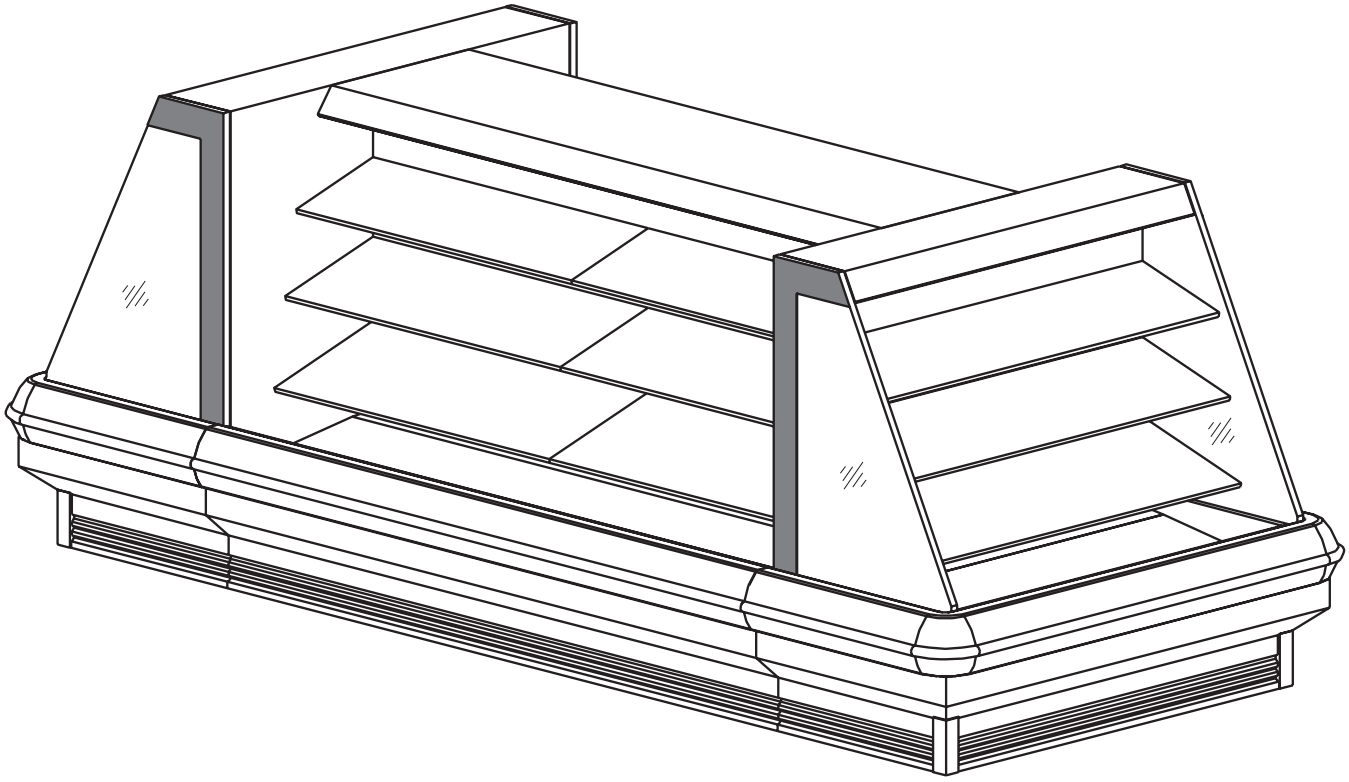

The ON4EMs shown below are unitized with two ON4UM-8′ cases with lighted rear sills, standard fronts, and 14″, 16″ & 18″ shelves.

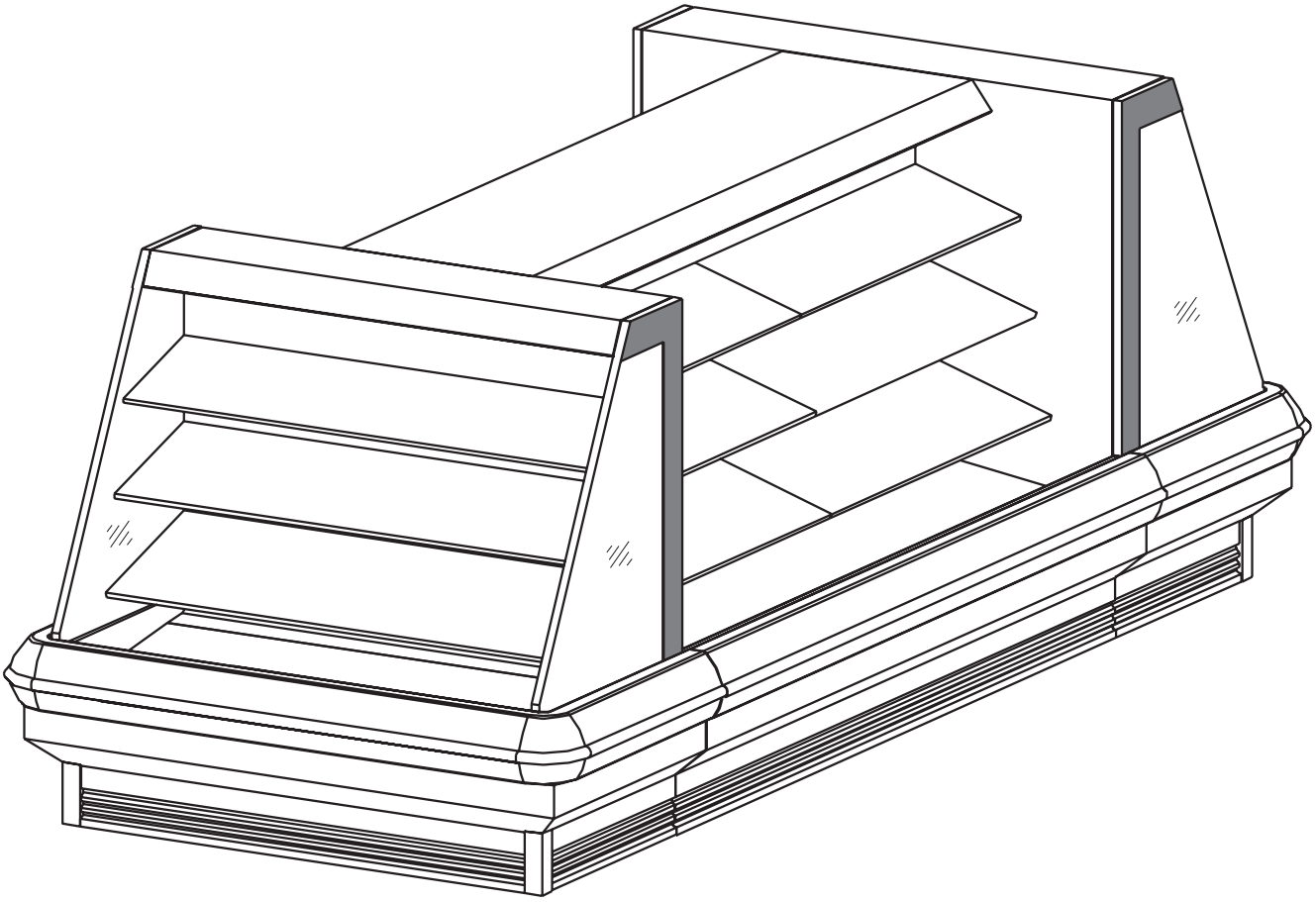

Narrow Multi-Deck Deli End Cap Merchandiser

ON5EM

Electrical Data

Model	Fans per Case	Standard Fans		High Efficiency Fans		Anti-Condensate Heaters		Defrost Heaters			
		120 Volts		120 Volts		120 Volts		208 Volts		240 Volts	
		Amps	Watts	Amps	Watts	Amps	Watts	Amps	Watts	Amps	Watts
ON5EM	2	1.00	60	0.23	14	1.89	227	2.31	480	2.66	640

Lighting Data

Model	Bulbs per Row	Bulb Length	Typical per Light Row		Maximum Lighting	
			120 Volts		120 Volts	
			Amps	Watts	Amps	Watts
ON5EM	1	5′	0.28	34	1.42	170

Guidelines & Control Settings

Model	BTUH/cs[1]	Coil Type	Evaporator (°F)	Superheat Set Point @ Bulb (°F)	Discharge Air (°F)	Return Air (°F)	Discharge Air Velocity[3] (FPM)
ON5EM	6770[2]	Enh.	22	6-8	30	40	300

[1] BTUHs/case listed are for parallel operation. Conventional ratings may be approximated by multiplying listed rating by 1.04.

[2] High efficiency fans reduce refrigeration load by 96 BTUHs/fan.

[3] Average discharge air velocity at peak of defrost.

Defrost Controls

Model	Defrosts Per Day	Run-Off Time (min)	Electric Defrost		Timed Off Defrost		Hot Gas Defrost		Reverse Air Defrost	
			Fail-safe (min)	Termination Temp. (°F)	Fail-safe (min)	Termination Temp. (°F)	Fail-safe (min)	Termination Temp. (°F)	Fail-safe (min)	Termination Temp. (°F)
ON5EM	6	6 - 8	40	47	45	47	- - -[4]	- - -	- - -	- - -

[4] NOTE: - - - not an option on this case model.

Medium Temperature Defrost Schedule

No. Per Day	Hours
1	12 midnight
2	12 am - 12 pm
3	6 am - 2 pm - 10 pm
4	12 - 6 am - 12 - 6 pm

All measurements are taken per ARI 1200 - 2002 specifications.

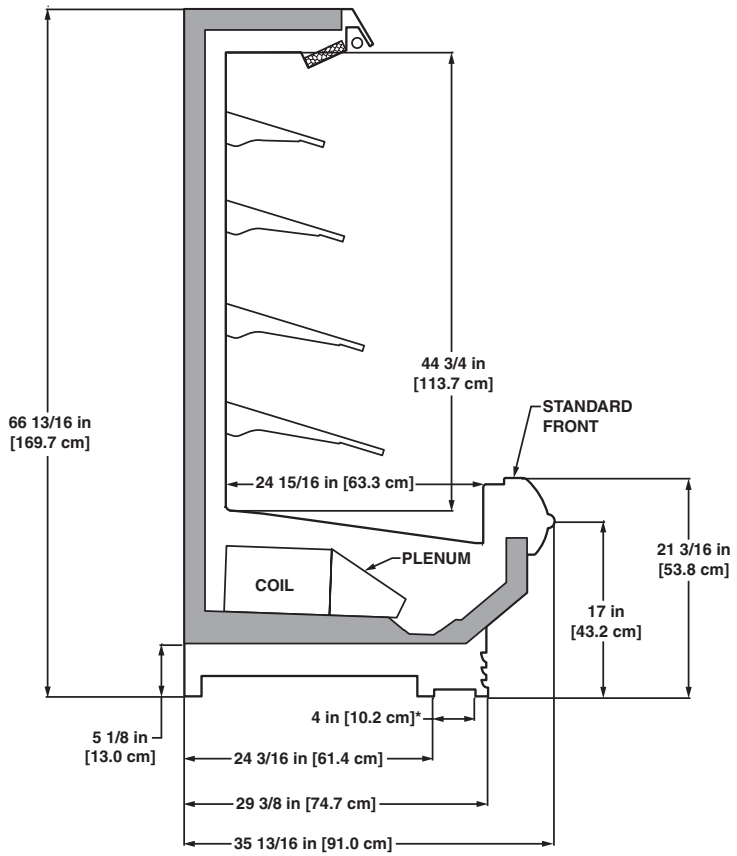

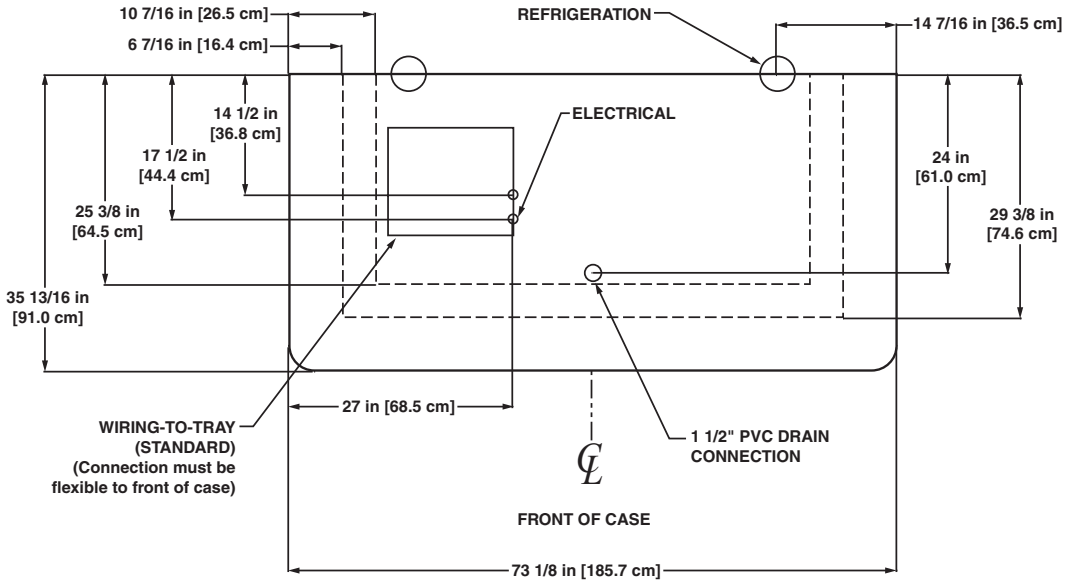

NOTES:

* STUB-UP AREA

- SUCTION LINE - 7/8", LIQUID LINE - 1/2"
- AVAILABLE SHELF SIZES: 10", 12", 14" & 16"

NSF COMPONENT c UL us

A DOVER COMPANY

The ON5EMs shown below are unitized with two ON5UM-8' cases with lighted rear sills, standard fronts, and 12, 14" & 16" shelves.

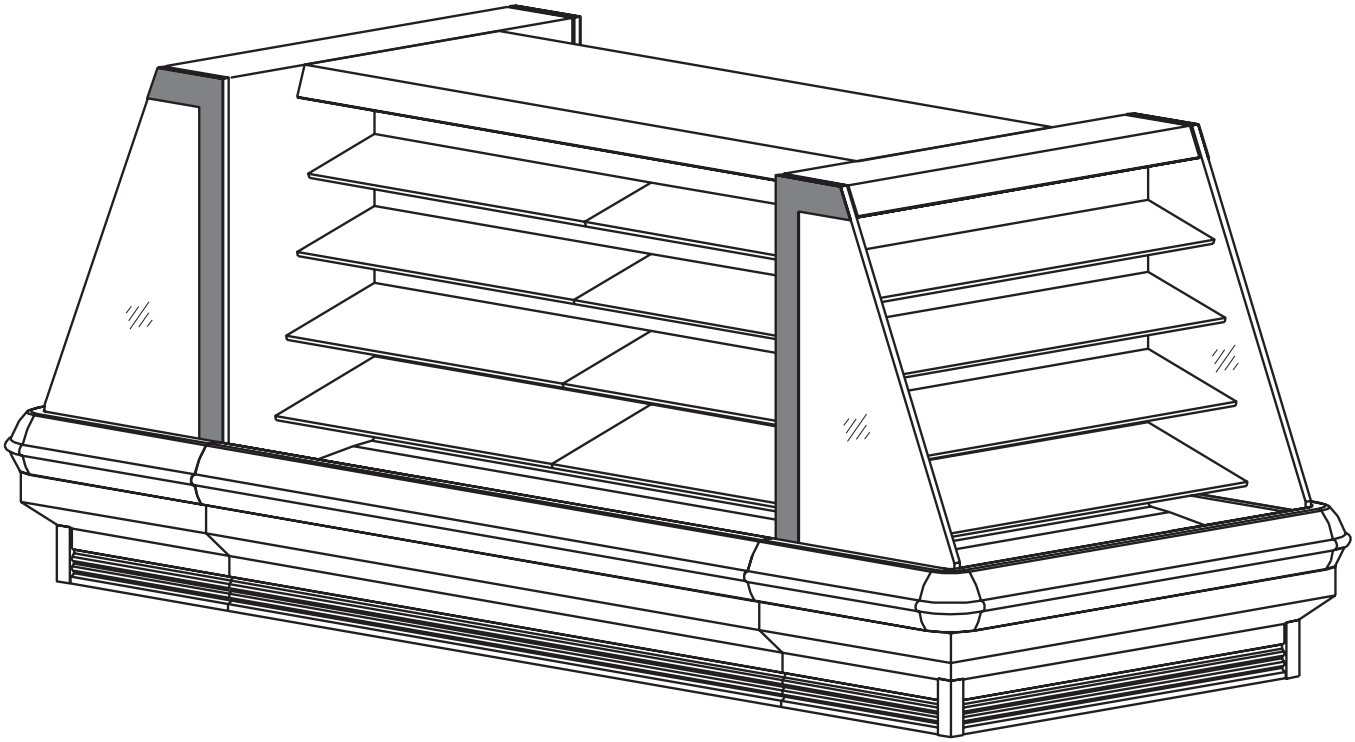

The ON5EMs shown below are unitized with two ON5UM-8' cases with lighted rear sills, standard fronts, and 12, 14" & 16" shelves.

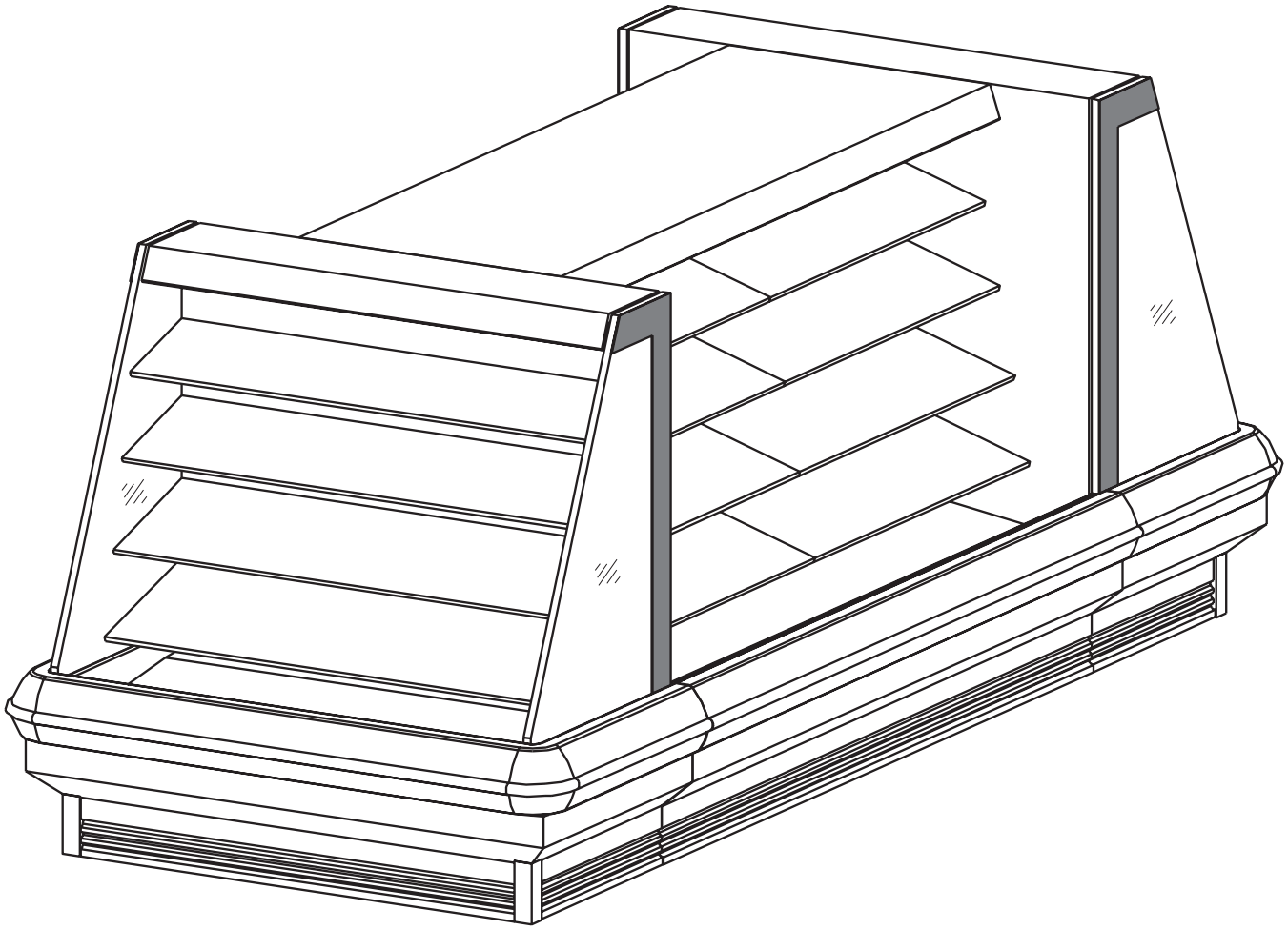

Single Deck Bulk Produce End Cap Merchandiser

OEP

Electrical Data

Model	Fans per Case	Standard Fans		High Efficiency Fans		Anti-Condensate Heaters		Defrost Heaters			
		120 Volts		120 Volts		120 Volts		208 Volts		240 Volts	
		Amps	Watts	Amps	Watts	Amps	Watts	Amps	Watts	Amps	Watts
OEP	2	1.00	60	0.23	14	- - -[1]	- - -	2.88	600	3.33	798

[1] NOTE: - - - not an option on this case model.

Lighting Data

Model	Bulbs per Row	Bulb Length	Typical per Light Row		Maximum Lighting	
			120 Volts		120 Volts	
			Amps	Watts	Amps	Watts
OEP	- - -	- - -	- - -	- - -	- - -	- - -

Guidelines & Control Settings

Model	BTUH/cs[2]	Coil Type	Evaporator (°F)	Superheat Set Point @ Bulb (°F)	Discharge Air (°F)	Return Air (°F)	Discharge Air Velocity[4] (FPM)
OEP Bulk Produce	2244[3]	Enh.	29	6-8	NA	47	NA[5]

[2] BTUHs/case listed are for parallel operation. Conventional ratings may be approximated by multiplying listed rating by 1.04.

[3] High efficiency fans reduce refrigeration load by 96 BTUHs/fan.

[4] Average discharge air velocity at peak of defrost.

[5] Not Applicable

Defrost Controls

Model	Defrosts Per Day	Run-Off Time (min)	Electric Defrost		Timed Off Defrost		Hot Gas Defrost		Reverse Air Defrost	
			Fail-safe (min)	Termination Temp. (°F)	Fail-safe (min)	Termination Temp. (°F)	Fail-safe (min)	Termination Temp. (°F)	Fail-safe (min)	Termination Temp. (°F)
OEP	2	6 - 8	40	49	60	47	26	45	- - -	- - -

Medium Temperature Defrost Schedule

No. Per Day	Hours
1	12 midnight
2	12 am - 12 pm
3	6 am - 2 pm - 10 pm
4	12 - 6 am - 12 - 6 pm

All measurements are taken per ARI 1200 - 2002 specifications.

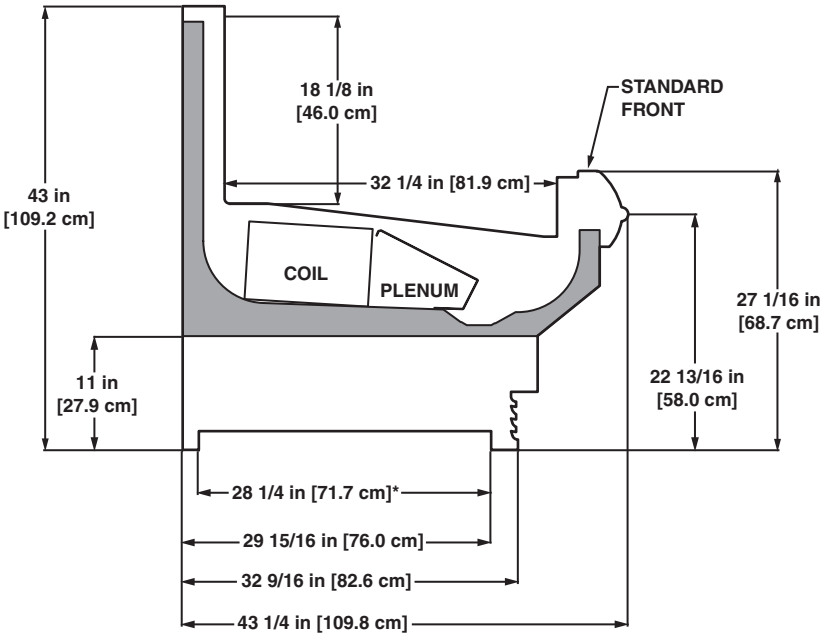

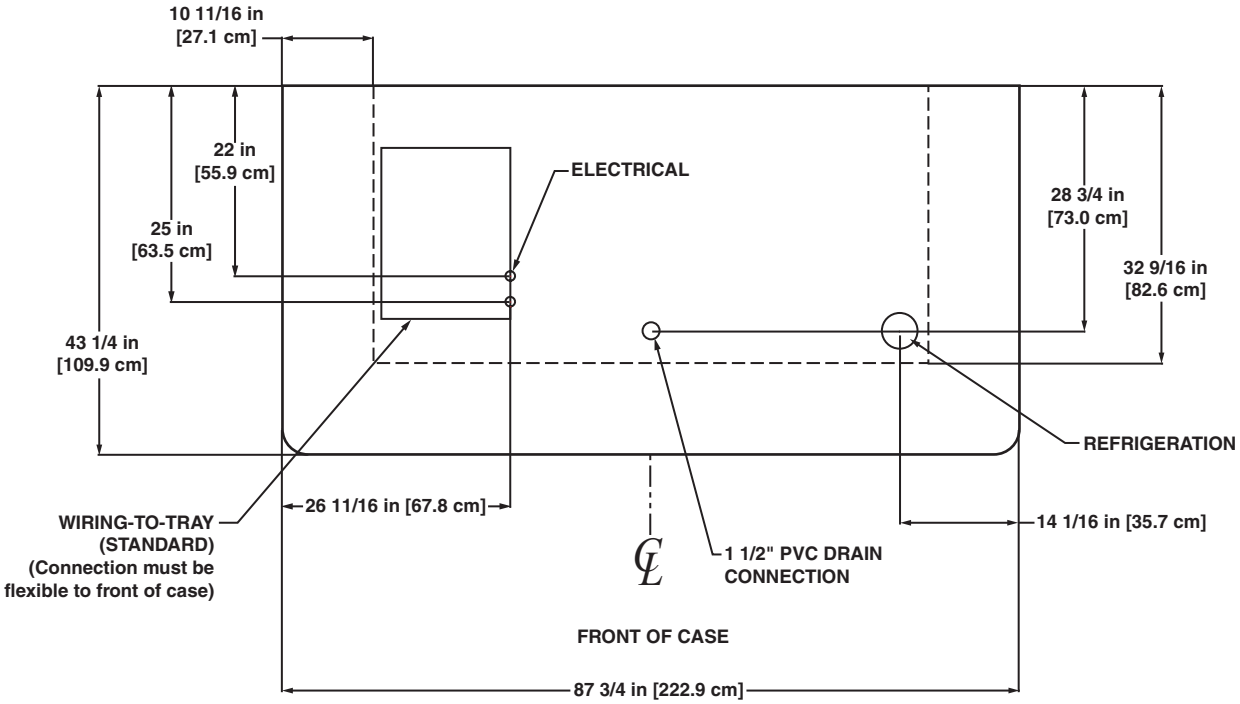

NOTES:

* STUB-UP AREA

• SUCTION LINE - 7/8", LIQUID LINE - 3/8"

The OEPs shown below are unitized with two OP-8'cases with 43" rear sills and standard fronts.

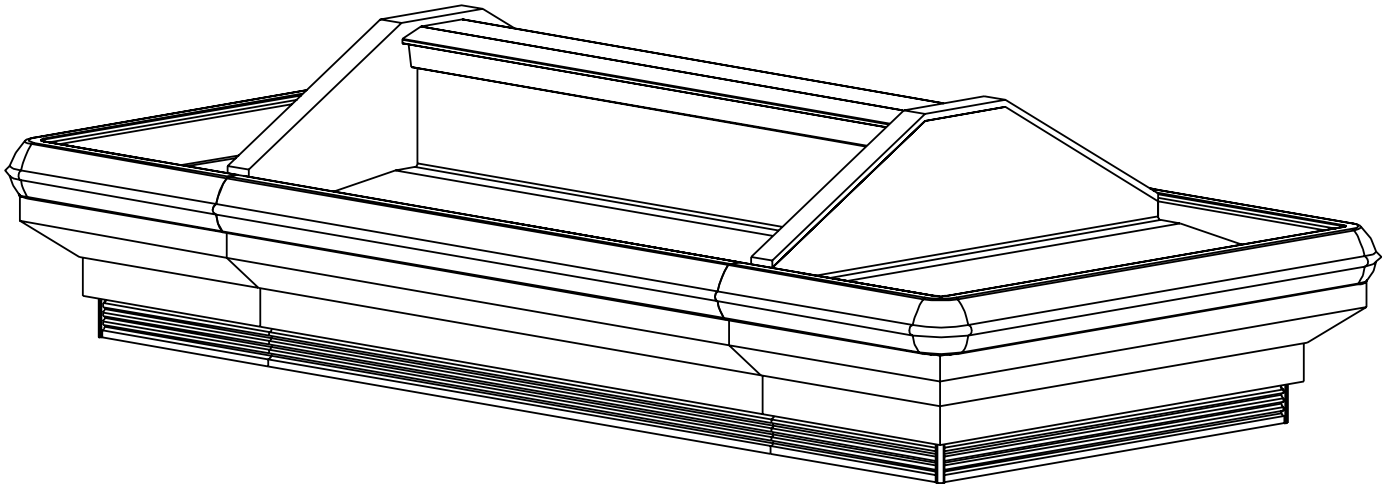

The OEPs shown below are unitized with two OP-8'cases with 43" rear sills and standard fronts.

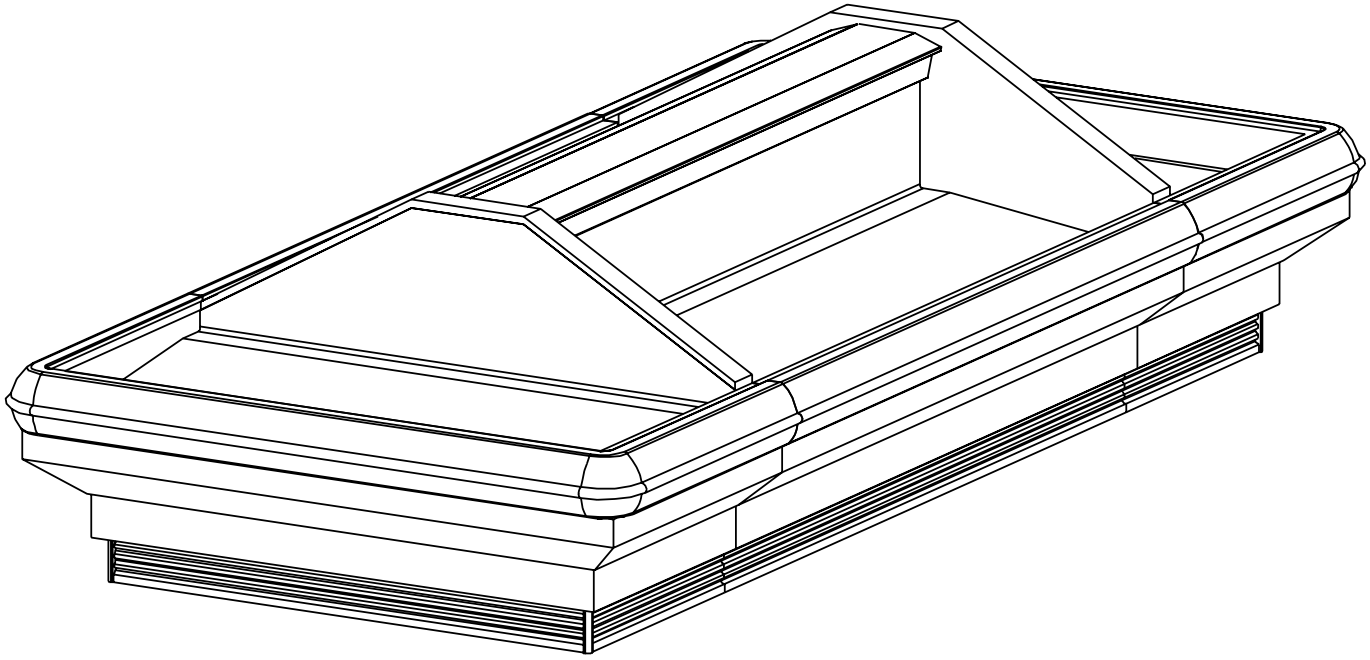

Narrow Multi-Deck Bulk Produce End Cap Merchandiser

ON3EP

Electrical Data

Model	Fans per Case	Standard Fans		High Efficiency Fans		Anti-Condensate Heaters		Defrost Heaters			
		120 Volts		120 Volts		120 Volts		208 Volts		240 Volts	
		Amps	Watts	Amps	Watts	Amps	Watts	Amps	Watts	Amps	Watts
ON3EP	2	1.00	60	0.15	9.2	- - -[1]	- - -	2.31	480	2.66	640

[1] NOTE: - - - not an option on this case model.

Lighting Data

Model	Bulbs per Row	Bulb Length	Typical per Light Row		Maximum Lighting	
			120 Volts		120 Volts	
			Amps	Watts	Amps	Watts
ON3EP	- - -	- - -	- - -	- - -	- - -	- - -

Guidelines & Control Settings

Model	BTUH/cs[2]	Coil Type	Evaporator (°F)	Superheat Set Point @ Bulb (°F)	Discharge Air (°F)	Return Air (°F)	Discharge Air Velocity[4] (FPM)
ON3EP Bulk Produce	4260[3]	Enh.	29	6-8	NA	46	NA[5]

[2] BTUHs/case listed are for parallel operation. Conventional ratings may be approximated by multiplying listed rating by 1.04.

[3] High efficiency fans reduce refrigeration load by 96 BTUHs/fan.

[4] Average discharge air velocity at peak of defrost.

[5] Not Applicable

Defrost Controls

Model	Defrosts Per Day	Run-Off Time (min)	Electric Defrost		Timed Off Defrost		Hot Gas Defrost		Reverse Air Defrost	
			Fail-safe (min)	Termination Temp. (°F)	Fail-safe (min)	Termination Temp. (°F)	Fail-safe (min)	Termination Temp. (°F)	Fail-safe (min)	Termination Temp. (°F)
ON3EP	2	6 - 8	40	49	60	47	26	45	- - -	- - -

Medium Temperature Defrost Schedule

No. Per Day	Hours
1	12 midnight
2	12 am - 12 pm
3	6 am - 2 pm - 10 pm
4	12 - 6 am - 12 - 6 pm

All measurements are taken per ARI 1200 - 2002 specifications.

6/07

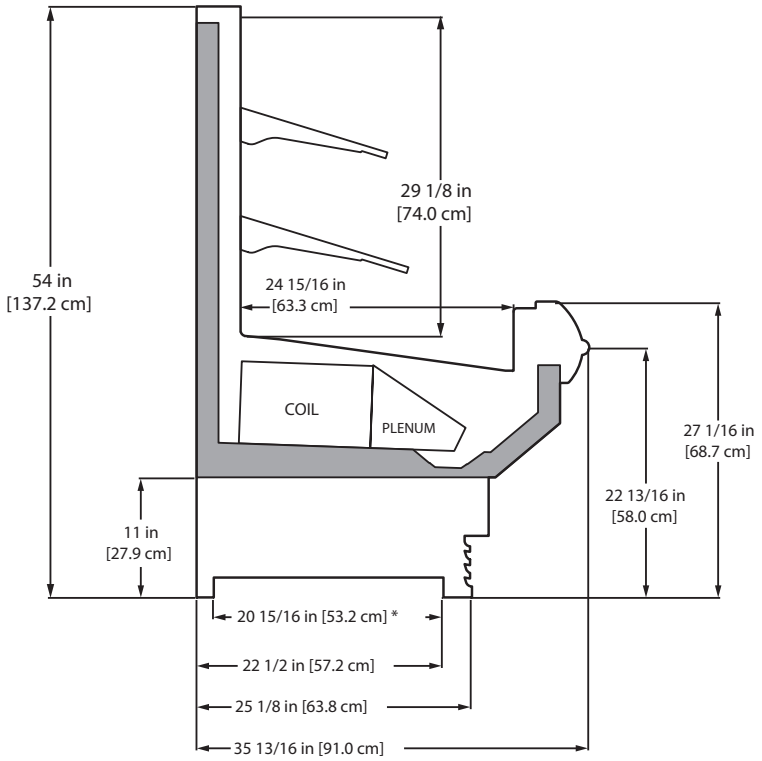

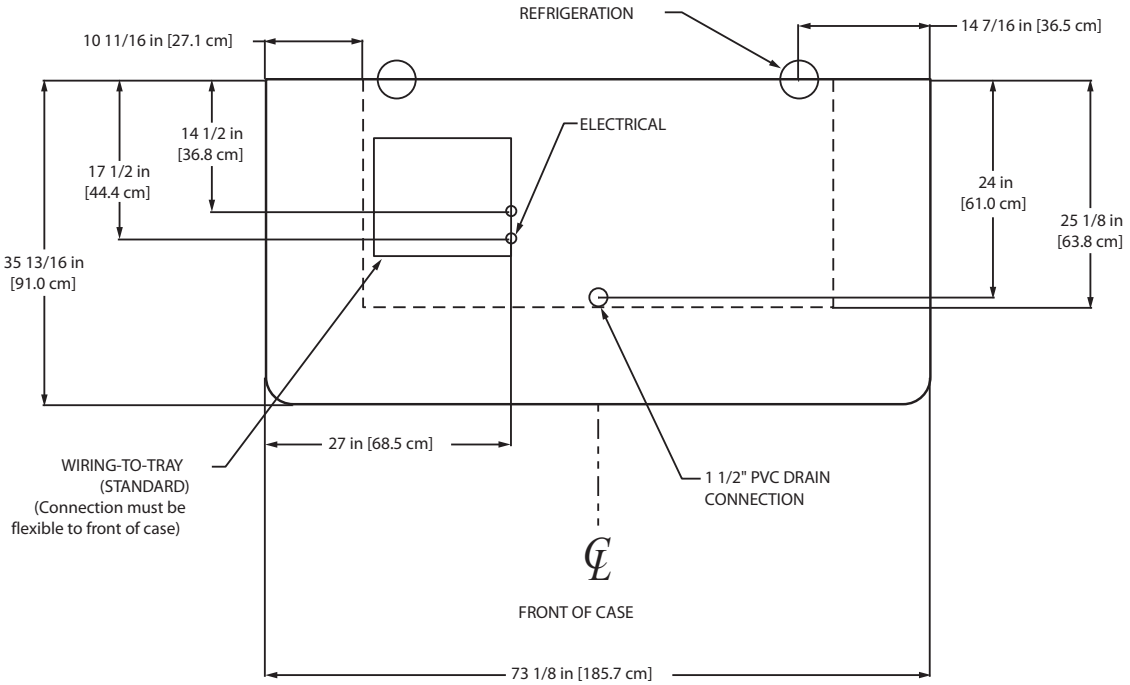

NOTES:

* STUB-UP AREA

• SUCTION LINE - 7/8", LIQUID LINE - 1/2"

The ON3EPs shown below are unitized with two ON3UM-8' cases with 16" lighted rear sills, standard fronts, and 14" & 16" shelves.

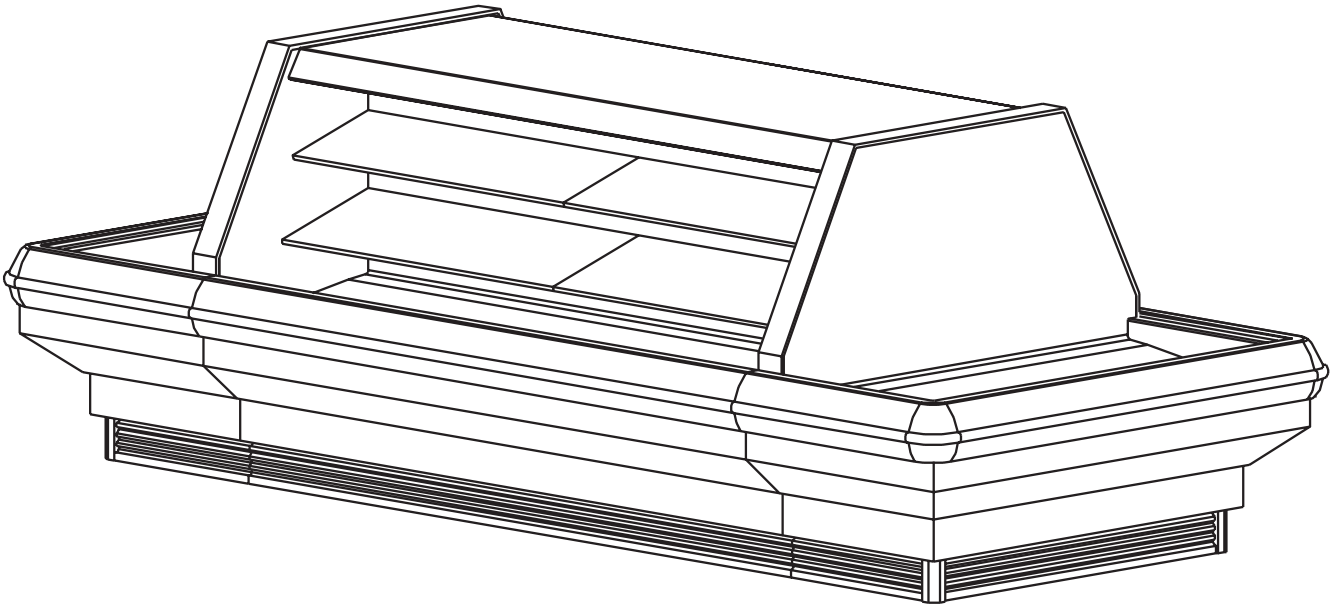

The ON3EPs shown below are unitized with two ON3UM-8′ cases with 16″ lighted rear sills, standard fronts, and 14″ & 16″ shelves.

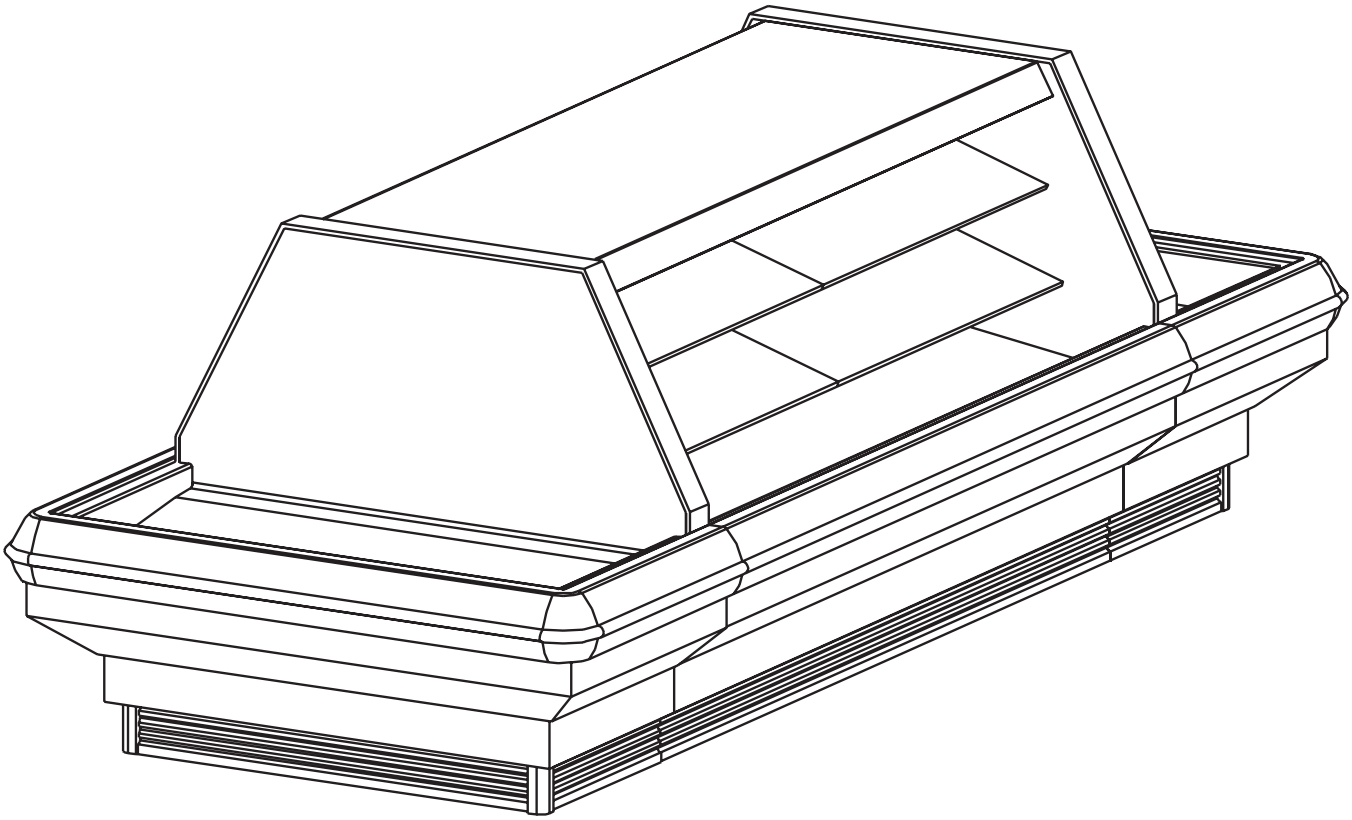

Multi-Deck Bulk Produce End Cap Merchandiser

O3EP

Electrical Data

Model	Fans per Case	Standard Fans		High Efficiency Fans		Anti-Condensate Heaters		Defrost Heaters			
		120 Volts		120 Volts		120 Volts		208 Volts		240 Volts	
		Amps	Watts	Amps	Watts	Amps	Watts	Amps	Watts	Amps	Watts
O3EP	2	1.00	60	0.15	9.2	- - -[1]	- - -	2.88	600	3.33	798

[1] NOTE: - - - not an option on this case model.

Lighting Data

Model	Bulbs per Row	Bulb Length	Typical per Light Row		Maximum Lighting	
			120 Volts		120 Volts	
			Amps	Watts	Amps	Watts
O3EP	- - -	- - -	- - -	- - -	- - -	- - -

Guidelines & Control Settings

Model	BTUH/cs[2]	Coil Type	Evaporator (°F)	Superheat Set Point @ Bulb (°F)	Discharge Air (°F)	Return Air (°F)	Discharge Air Velocity[4] (FPM)
O3EP Bulk Produce	2917[3]	Enh.	29	6-8	NA	47	NA[5]

[2] BTUHs/case listed are for parallel operation. Conventional ratings may be approximated by multiplying listed rating by 1.04.

[3] High efficiency fans reduce refrigeration load by 96 BTUHs/fan.

[4] Average discharge air velocity at peak of defrost.

[5] Not Applicable

Defrost Controls

Model	Defrosts Per Day	Run-Off Time (min)	Electric Defrost		Timed Off Defrost		Hot Gas Defrost		Reverse Air Defrost	
			Fail-safe (min)	Termination Temp. (°F)	Fail-safe (min)	Termination Temp. (°F)	Fail-safe (min)	Termination Temp. (°F)	Fail-safe (min)	Termination Temp. (°F)
O3EP	2	6 - 8	40	49	60	47	26	45	- - -	- - -

Medium Temperature Defrost Schedule

No. Per Day	Hours
1	12 midnight
2	12 am - 12 pm
3	6 am - 2 pm - 10 pm
4	12 - 6 am - 12 - 6 pm

All measurements are taken per ARI 1200 - 2002 specifications.

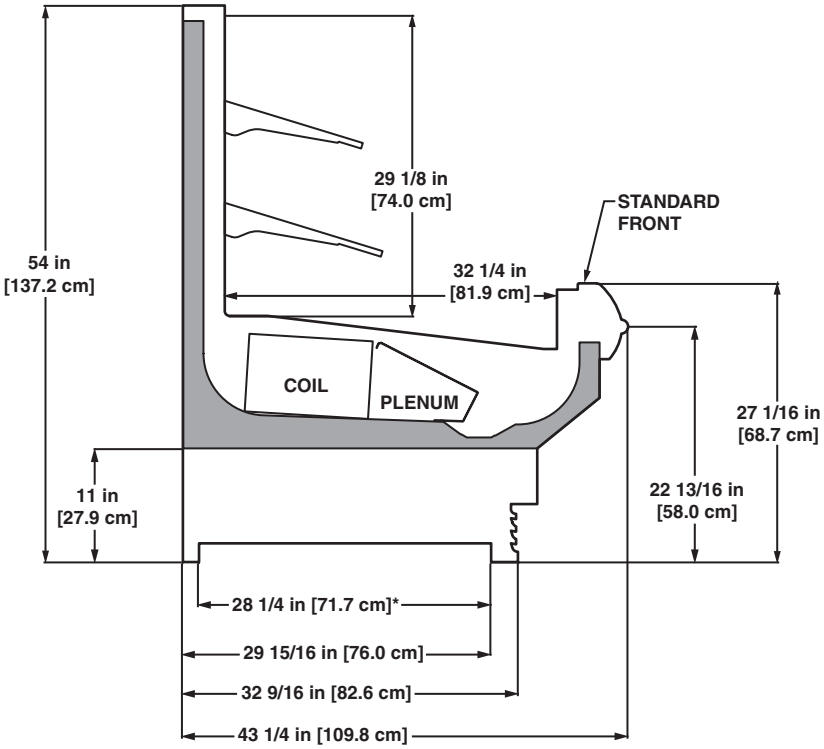

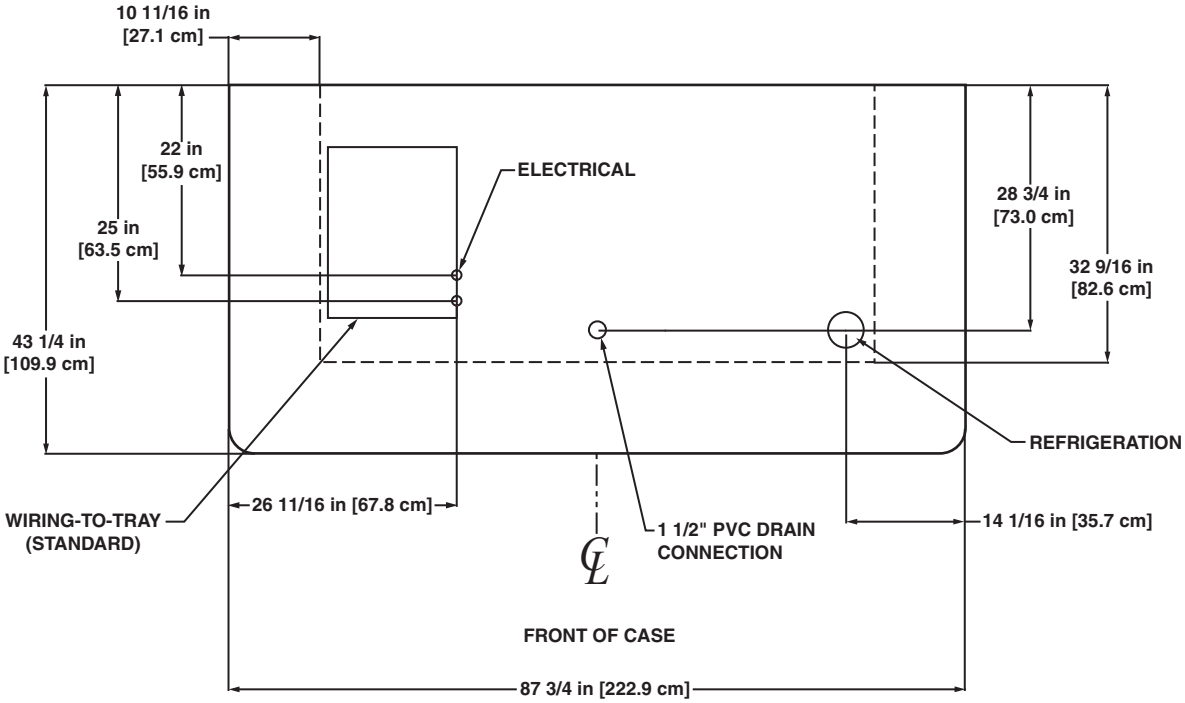

NOTES:

* STUB-UP AREA

• SUCTION LINE - 7/8", LIQUID LINE - 3/8"

The O3EPs shown below are unitized with two O3UM-8'cases with standard rear sills, standard fronts, and 14" & 16" shelves.

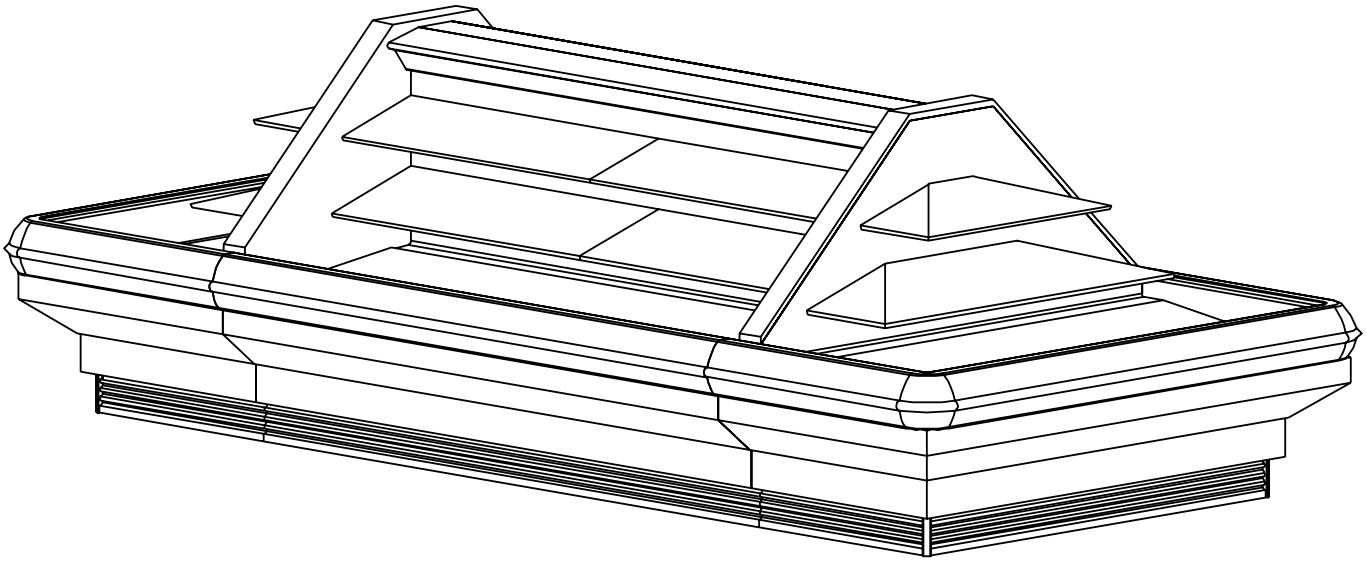

The O3EPs shown below are unitized with two O3UM-8'cases with standard rear sills, standard fronts, and 14" & 16" shelves.

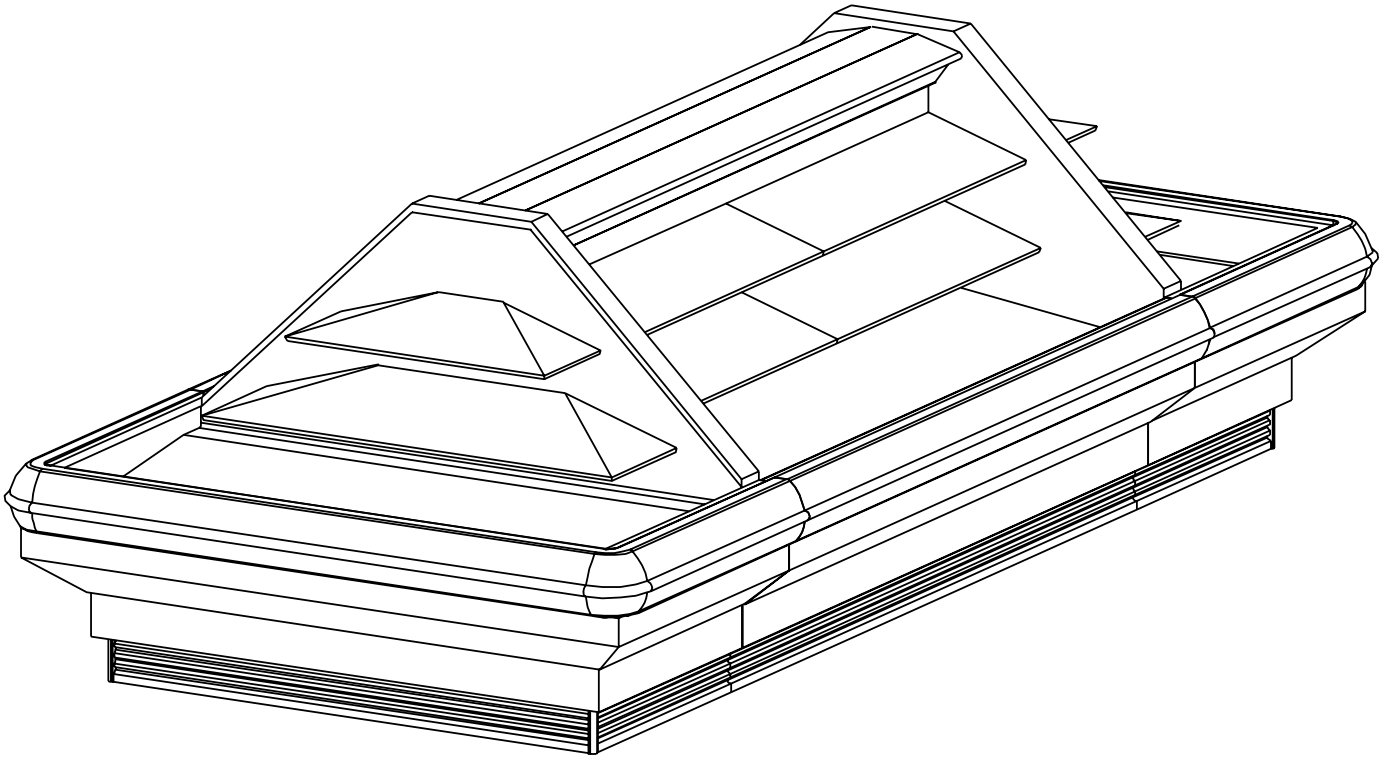

REACH-IN

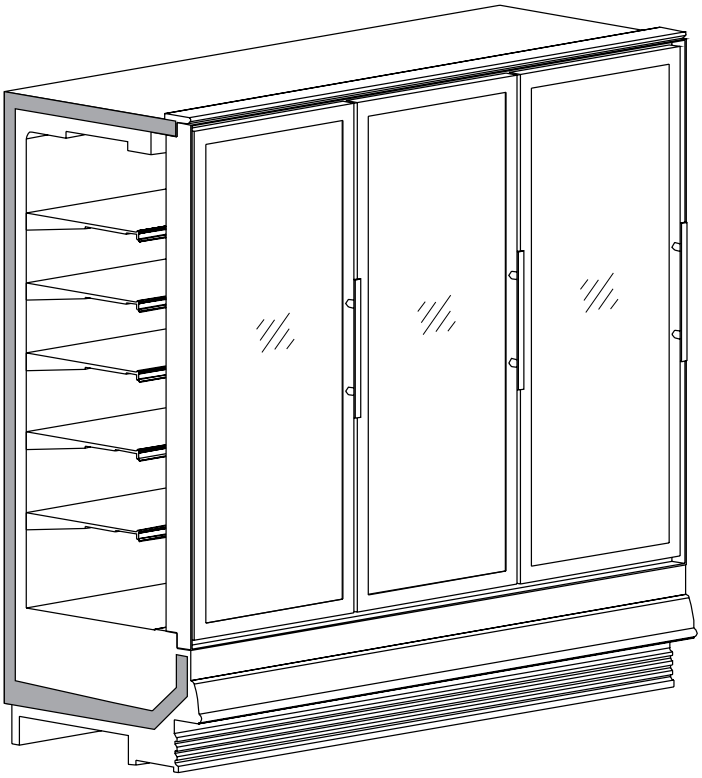

Notes:

- **Cases comply with ANSI / NSF* Standard 7. Units marked as components require remote refrigeration.**
- **Allow for an extra 1/8" per joint when lining up merchandisers.**
- **Front sill height does not affect case performance unless specifically shown.**
- **Front and rear sill heights vary with baseframe height.**

* ANSI - American National Standard Institute
NSF - National Sanitation Foundation

Narrow Glass Door Reach-in Beverage Merchandiser

ONRB - 2, 3, 4, 5 & 6-door

Electrical Data

Model		Fans per Case	Standard Fans 120 Volts Amps	Standard Fans 120 Volts Watts	High Efficiency Fans 120 Volts Amps	High Efficiency Fans 120 Volts Watts	Anti-Condensate Heaters 120 Volts Amps	Anti-Condensate Heaters 120 Volts Watts	Defrost Heaters 208 Volts Amps	Defrost Heaters 208 Volts Watts	Defrost Heaters 240 Volts Amps	Defrost Heaters 240 Volts Watts
ONRB	2-door	2	1.00	60	0.31	18.4	1.01	121	4.39	914	5.06	1215
	3-door	3	1.50	90	0.46	27.6	1.49	179	4.96	1032	5.71	1370
	4-door	4	2.00	120	0.61	36.8	1.96	235	6.51	1355	7.55	1813
	5-door	5	2.50	150	0.77	46.0	2.40	288	7.96	1655	9.17	2201
	6-door	6	3.00	180	0.92	55.2	2.92	350	9.40	1955	10.79	2589

Lighting Data

Model		Fluorescent Lighting 120 Volts Amps	Fluorescent Lighting 120 Volts Watts	LED[1] Lighting 120 Volts Amps	LED[1] Lighting 120 Volts Watts	Total BTUH Credit for LED Lighting BTUH
ONRB	2-door	1.50	180	0.76	91	304
	3-door	1.90	228	1.14	137	310
	4-door	2.40	288	1.52	182	362
	5-door	2.90	348	1.89	227	413
	6-door	3.40	408	2.28	273	461

[1] LED lighting values based on GE Gelcore LEDs

Guidelines & Control Settings

Model	BTUH/door[3]	Coil Type	Evaporator (°F)	Superheat Set Point @ Bulb (°F)	Discharge Air (°F)	Return Air (°F)	Discharge Air Velocity[5] (FPM)
ONRB[2] - Deli/Dairy	830[4]	Enh.	32	6-8	36	38	460
ONRB[2] - Beverage	800[4]	Enh.	34	6-8	38	40	460

[2] All data listed is for an ONRB configured with 20" shelves.

[3] BTUHs/door listed are for parallel operation. Conventional ratings may be approximated by multiplying listed rating by 1.04.

[4] High efficiency fans reduce refrigeration load by 96 BTUHs/fan.

[5] Average discharge air velocity at peak of defrost.

Defrost Controls

Model	Defrosts Per Day	Run-Off Time (min)	Electric Defrost Fail-safe (min)	Electric Defrost Termination Temp. (°F)	Timed Off Defrost Fail-safe (min)	Timed Off Defrost Termination Temp. (°F)	Hot Gas Defrost Fail-safe (min)	Hot Gas Defrost Termination Temp. (°F)	Reverse Air Defrost Fail-safe (min)	Reverse Air Defrost Termination Temp. (°F)
ONRB	4[6]	6 - 8	30	47	30	40	24	47	- - -[7]	- - -

[6] If timed off defrost is utilized. If electric or hot gas defrost is utilized case only requires 1 defrost per day.

[7] NOTE: - - - not an option on this case model.

Medium Temperature Defrost Schedule

No. Per Day	Hours
1	12 midnight
2	12 am - 12 pm
3	6 am - 2 pm - 10 pm
4	12 - 6 am - 12 - 6 pm

All measurements are taken per ARI 1200 - 2002 specifications.

NSF COMPONENT

c UL us

Hill PHOENIX EXCELLENCE

A DOVER COMPANY

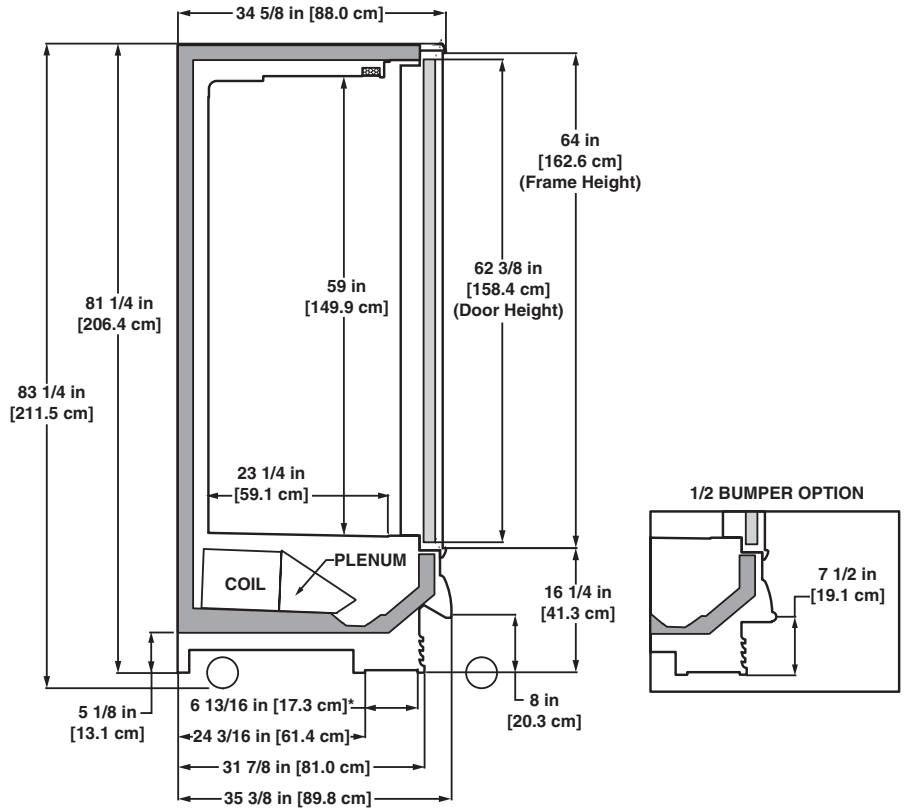

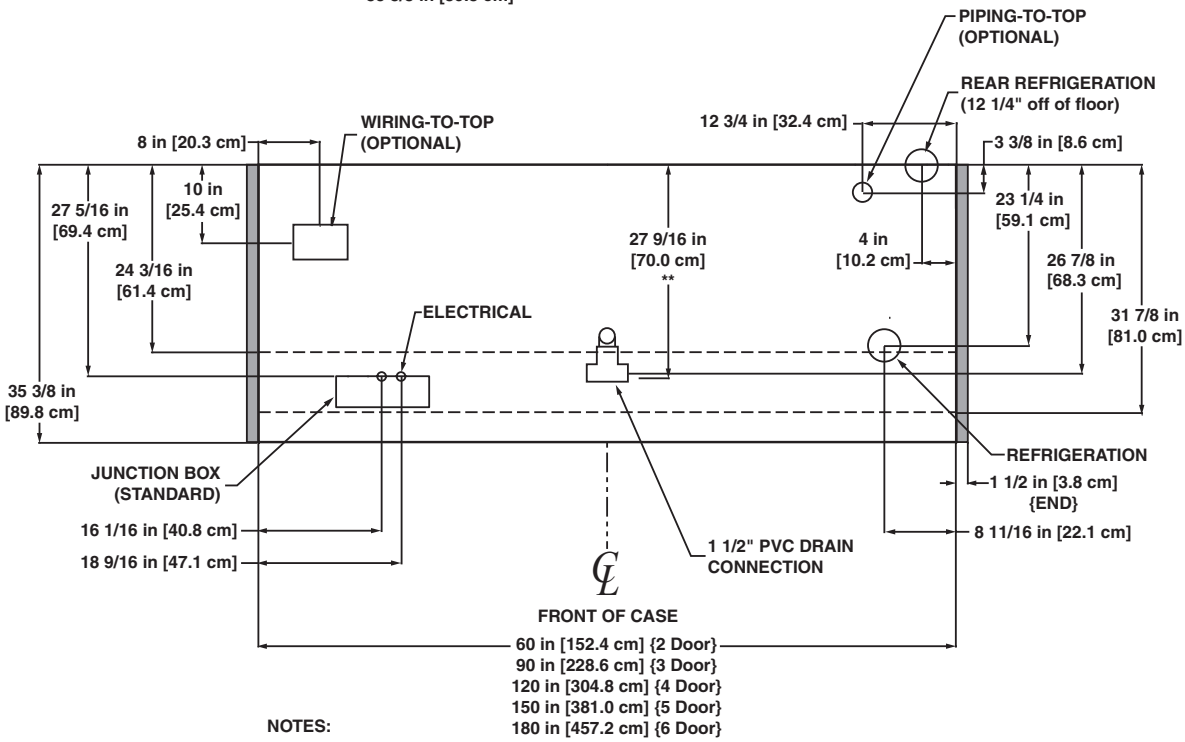

NOTES:

* STUB-UP AREA
** RECOMMENDED STUB-UP CENTERLINE FOR ELECTRICAL AND HUB DRAINS

- ENDS ADD APPROXIMATELY 1 INCH TO CASE HEIGHT
- WIRING-TO-THE-TOP- ADDS APPROXIMATELY 1 INCH TO CASE HEIGHT
- A 2" MINIMUM AIR GAP IS REQUIRED BETWEEN THE REAR OF THE CASE AND A WALL
- SUCTION LINE (ALL LENGTHS) 1/2"
- LIQUID LINE (ALL LENGTHS) - 3/8", LIQUID LINE w/ HOT GAS DEFROST (ALL LENGTHS) - 1/2"
- AVAILABLE SHELF SIZES: WIRE SHELVES 16", 18", 20" & 22"
  SOLID SHELVES 18", 20" & 22"
  (TOP SHELF MUST BE 20" OR SHORTER. RECOMMENDED CONFIGURATION IS 20" SHELF AND 4 22" SHELVES BELOW TOP SHELF)

NSF COMPONENT c UL us

A DOVER COMPANY

High Narrow Glass Door Reach-in Beverage Merchandiser

ONRBH - 2, 3, 4 & 5-door

Electrical Data

Model		Fans per Case	Standard Fans 120 Volts Amps	Standard Fans 120 Volts Watts	High Efficiency Fans 120 Volts Amps	High Efficiency Fans 120 Volts Watts	Anti-Condensate Heaters 120 Volts Amps	Anti-Condensate Heaters 120 Volts Watts	Defrost Heaters 208 Volts Amps	Defrost Heaters 208 Volts Watts	Defrost Heaters 240 Volts Amps	Defrost Heaters 240 Volts Watts
ONRBH	2-door	2	1.00	60	0.31	18.4	1.06	127	4.39	914	5.06	1215
	3-door	3	1.50	90	0.46	27.6	1.55	186	4.96	1032	5.71	1370
	4-door	4	2.00	120	0.61	36.8	2.07	248	6.51	1355	7.55	1813
	5-door	5	2.50	150	0.77	46.0	2.54	305	7.96	1655	9.17	2201

Lighting Data

Model		Fluorescent Lighting 120 Volts Amps	Fluorescent Lighting 120 Volts Watts	LED[1] Lighting 120 Volts Amps	LED[1] Lighting 120 Volts Watts	Total BTUH Credit for LED Lighting BTUH
ONRBH	2-door	1.50	180	0.76	91	304
	3-door	1.90	228	1.14	137	310
	4-door	2.40	288	1.52	182	362
	5-door	2.90	348	1.89	227	413

[1] LED lighting values based on GE Gelcore LEDs

Guidelines & Control Settings

Model	BTUH/door[3]	Coil Type	Evaporator (°F)	Superheat Set Point @ Bulb (°F)	Discharge Air (°F)	Return Air (°F)	Discharge Air Velocity[5] (FPM)
ONRBH[2] - Deli/Dairy	830[4]	Enh.	32	6-8	36	38	405
ONRBH[2] - Beverage	800[4]	Enh.	34	6-8	38	40	405

[2] All data listed is for an ONRBH configured with 20" shelves.

[3] BTUHs/door listed are for parallel operation. Conventional ratings may be approximated by multiplying listed rating by 1.04.

[4] High efficiency fans reduce refrigeration load by 96 BTUHs/fan.

[5] Average discharge air velocity at peak of defrost.

Defrost Controls

Model	Defrosts Per Day	Run-Off Time (min)	Electric Defrost Fail-safe (min)	Electric Defrost Termination Temp. (°F)	Timed Off Defrost Fail-safe (min)	Timed Off Defrost Termination Temp. (°F)	Hot Gas Defrost Fail-safe (min)	Hot Gas Defrost Termination Temp. (°F)	Reverse Air Defrost Fail-safe (min)	Reverse Air Defrost Termination Temp. (°F)
ONRBH	4[6]	6 - 8	30	47	30	40	24	47	- - -[7]	- - -

[6] If timed off defrost is utilized. If electric or hot gas defrost is utilized case only requires 1 defrost per day.

[7] NOTE: - - - not an option on this case model.

Medium Temperature Defrost Schedule

No. Per Day	Hours
1	12 midnight
2	12 am - 12 pm
3	6 am - 2 pm - 10 pm
4	12 - 6 am - 12 - 6 pm

All measurements are taken per ARI 1200 - 2002 specifications.

NSF COMPONENT

c UL us

Hill PHOENIX EXCELLENCE

A DOVER COMPANY

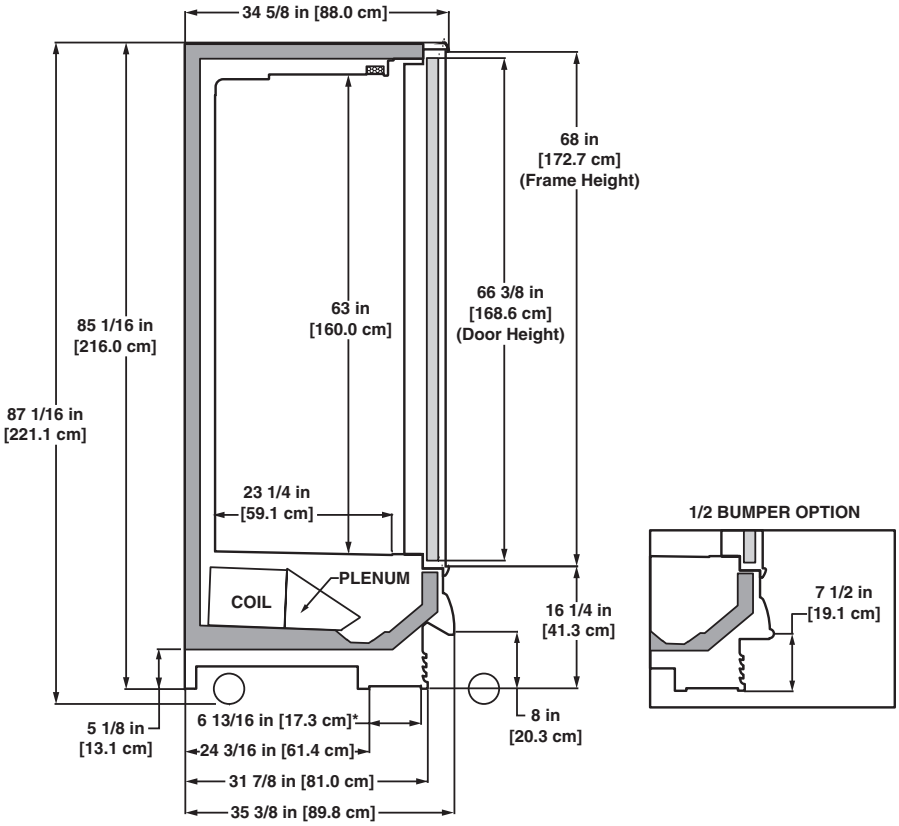

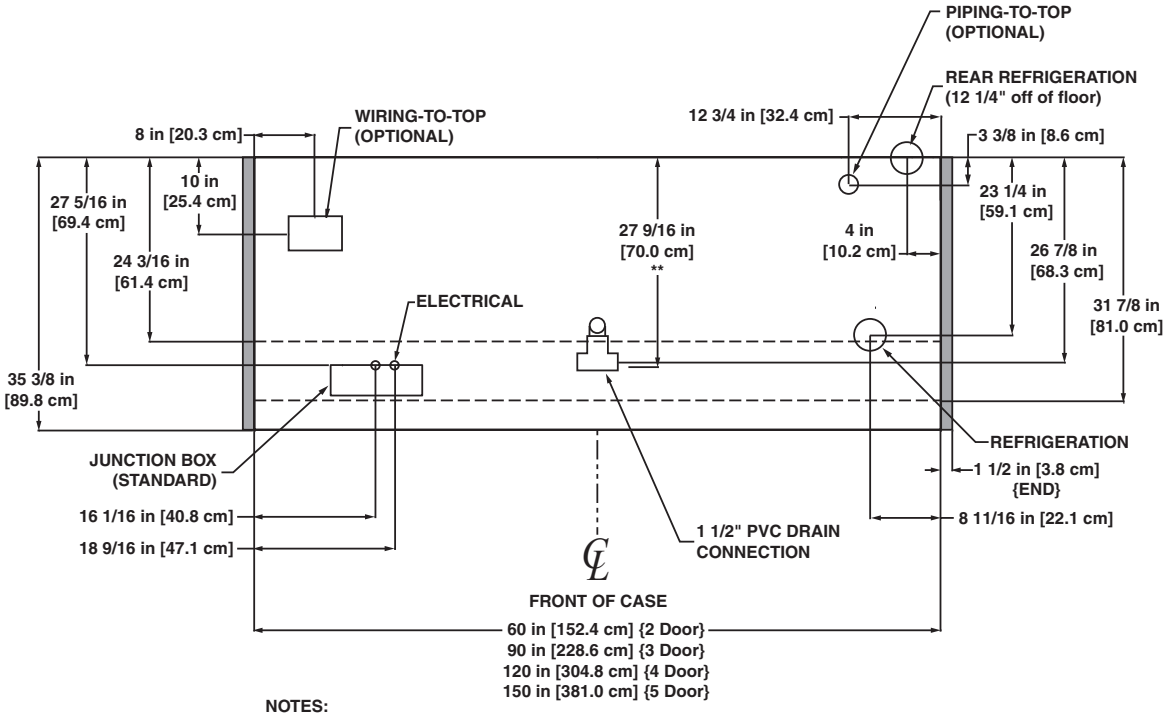

NOTES:

* STUB-UP AREA
** RECOMMENDED STUB-UP CENTERLINE FOR ELECTRICAL AND HUB DRAINS

- ENDS ADD APPROXIMATELY 1 INCH TO CASE HEIGHT
- WIRING-TO-THE-TOP- ADDS APPROXIMATELY 1 INCH TO CASE HEIGHT
- A 2" MINIMUM AIR GAP IS REQUIRED BETWEEN THE REAR OF THE CASE AND A WALL
- SUCTION LINE (ALL LENGTHS) 1/2"
- LIQUID LINE (ALL LENGTHS) - 3/8", LIQUID LINE w/ HOT GAS DEFROST (ALL LENGTHS) - 1/2"
- AVAILABLE SHELF SIZES: WIRE SHELVES 16", 18", 20" & 22"
  SOLID SHELVES 18", 20" & 22"
  (TOP SHELF MUST BE 20" OR SHORTER. RECOMMENDED CONFIGURATION IS 20" SHELF AND 4 22" SHELVES BELOW TOP SHELF)

Glass Door Reach-in Beverage Merchandiser

ORB - 2, 3, 4, 5 & 6-door

Electrical Data

Model		Fans per Case	Standard Fans 120 Volts Amps	Standard Fans 120 Volts Watts	High Efficiency Fans 120 Volts Amps	High Efficiency Fans 120 Volts Watts	Anti-Condensate Heaters 120 Volts Amps	Anti-Condensate Heaters 120 Volts Watts	Defrost Heaters 208 Volts Amps	Defrost Heaters 208 Volts Watts	Defrost Heaters 240 Volts Amps	Defrost Heaters 240 Volts Watts
ORB	2-door	2	1.00	60	0.31	18.4	1.01	121	4.39	914	5.06	1215
	3-door	3	1.50	90	0.46	27.6	1.49	179	4.96	1032	5.71	1370
	4-door	4	2.00	120	0.61	36.8	1.96	235	6.51	1355	7.55	1813
	5-door	5	2.50	150	0.77	46.0	2.40	288	7.96	1655	9.17	2201
	6-door	6	3.00	180	0.92	55.2	2.92	350	9.40	1955	10.79	2589

Lighting Data

Model		Fluorescent Lighting 120 Volts Amps	Fluorescent Lighting 120 Volts Watts	LED[1] Lighting 120 Volts Amps	LED[1] Lighting 120 Volts Watts	Total BTUH Credit for LED Lighting BTUH
ORB	2-door	1.50	180	0.76	91	304
	3-door	1.90	228	1.14	137	310
	4-door	2.40	288	1.52	182	362
	5-door	2.90	348	1.89	227	413
	6-door	3.40	408	2.28	273	461

[1] LED lighting values based on GE Gelcore LEDs

Guidelines & Control Settings

Model	BTUH/door[2]	Coil Type	Evaporator (°F)	Superheat Set Point @ Bulb (°F)	Discharge Air (°F)	Return Air (°F)	Discharge Air Velocity[4] (FPM)
ORB - Deli/Dairy	830[3]	Enh.	32	6-8	36	38	380
ORB - Beverage	800[3]	Enh.	34	6-8	38	40	380

[2] BTUHs/door listed are for parallel operation. Conventional ratings may be approximated by multiplying listed rating by 1.04.

[3] High efficiency fans reduce refrigeration load by 96 BTUHs/fan.

[4] Average discharge air velocity at peak of defrost.

Defrost Controls

Model	Defrosts Per Day	Run-Off Time (min)	Electric Defrost Fail-safe (min)	Electric Defrost Termination Temp. (°F)	Timed Off Defrost Fail-safe (min)	Timed Off Defrost Termination Temp. (°F)	Hot Gas Defrost Fail-safe (min)	Hot Gas Defrost Termination Temp. (°F)	Reverse Air Defrost Fail-safe (min)	Reverse Air Defrost Termination Temp. (°F)
ORB	4[5]	6 - 8	30	47	30	40	24	47	- - -[6]	- - -

[5] If timed off defrost is utilized. If electric or hot gas defrost is utilized case only requires 1 defrost per day.

[6] NOTE: - - - not an option on this case model.

Medium Temperature Defrost Schedule

No. Per Day	Hours
1	12 midnight
2	12 am - 12 pm
3	6 am - 2 pm - 10 pm
4	12 - 6 am - 12 - 6 pm

All measurements are taken per ARI 1200 - 2002 specifications.

NSF COMPONENT

c UL us

Hill PHOENIX EXCELLENCE

A DOVER COMPANY

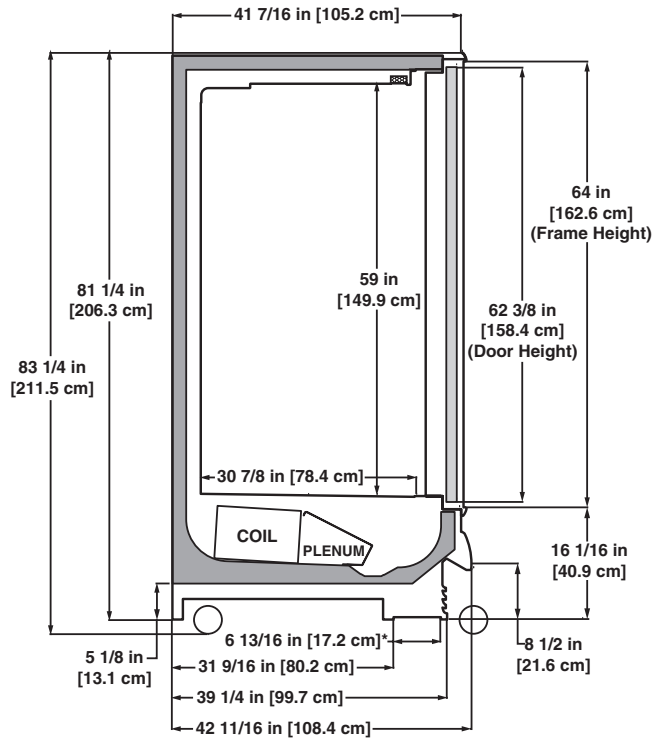

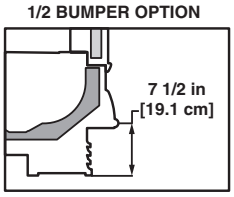

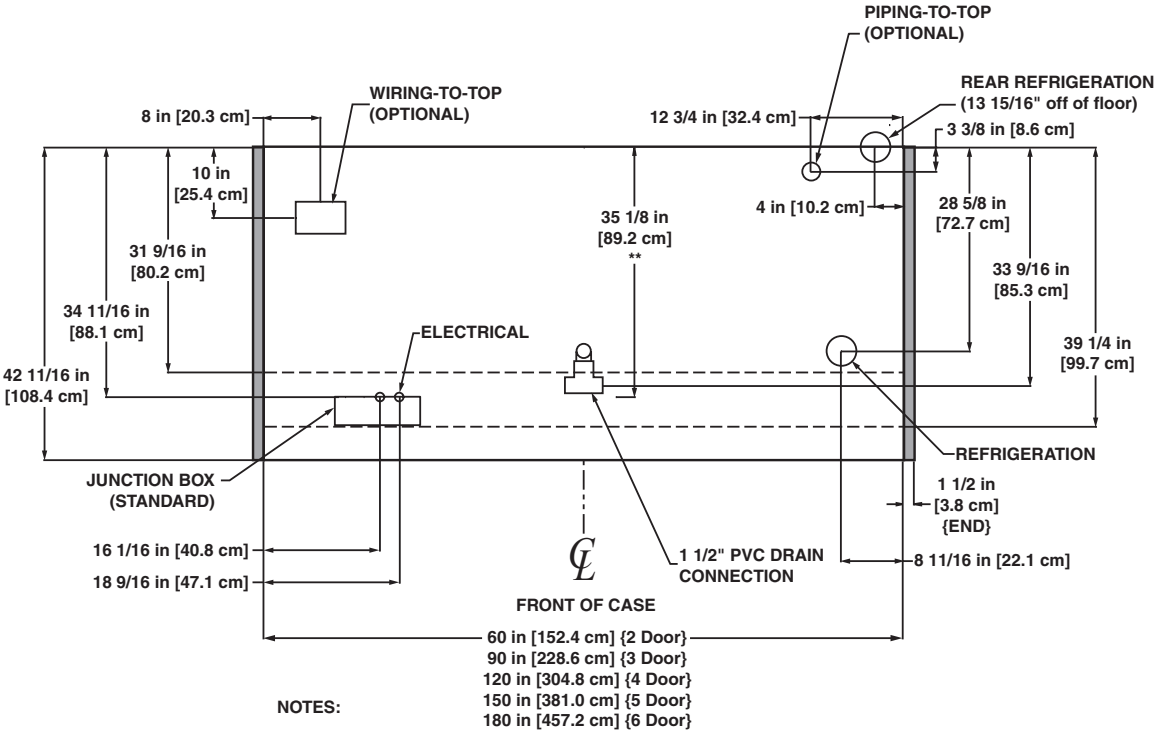

NOTES:

* STUB-UP AREA
** RECOMMENDED STUB-UP CENTERLINE FOR ELECTRICAL AND HUB DRAINS

- ENDS ADD APPROXIMATELY 1 INCH TO CASE HEIGHT
- WIRING-TO-THE-TOP- ADDS APPROXIMATELY 1 INCH TO CASE HEIGHT
- A 2" MINIMUM AIR GAP IS REQUIRED BETWEEN THE REAR OF THE CASE AND A WALL
- SUCTION LINE (ALL LENGTHS) 1/2"
- LIQUID LINE (ALL LENGTHS) - 3/8", LIQUID LINE w/ HOT GAS DEFROST (ALL LENGTHS) - 1/2"
- AVAILABLE SHELF SIZES: WIRE SHELVES 16", 18", 20", 22" & 23 1/2"
  SOLID SHELVES 18", 20", 22", 24" & 27"
  (TOP SHELF MUST BE 24" OR SHORTER WHEN USING 27" SHELVES.
  RECOMMENDED CONFIGURATION IS 1 - 24" SHELF AND 4 - 27" SHELVES BELOW TOP SHELF)

NSF COMPONENT c UL us

A DOVER COMPANY

Glass Door Reach-in Rear Load Beverage Merchandiser

ORBR - 8′ & 12′

Electrical Data

Model		Fans per Case	Standard Fan 120 Volts Amps	Standard Fan 120 Volts Watts	High Efficiency Fans 120 Volts Amps	High Efficiency Fans 120 Volts Watts	Anti-Condensate Heaters 120 Volts Amps	Anti-Condensate Heaters 120 Volts Watts	Defrost Heaters 208 Volts Amps	Defrost Heaters 208 Volts Watts	Defrost Heaters 240 Volts Amps	Defrost Heaters 240 Volts Watts
ORBR	8′	3	1.50	90	0.46	27.6	1.54	185	3.85	800	4.44	1065
	12′	4	2.00	120	0.61	36.8	1.79	215	5.78	1200	6.67	1600

Lighting Data

Model		Fluorescent Lighting 120 Volts Amps	Fluorescent Lighting 120 Volts Watts	LED[1] Lighting 120 Volts Amps	LED[1] Lighting 120 Volts Watts	Total BTUH Credit for LED Lighting BTUH
ORBR	8′	1.90	228	1.14	137	310
	12′	2.40	288	1.52	182	362

[1] LED lighting values based on GE Gelcore LEDs

Guidelines & Control Settings

Model	BTUH/door[3]	Coil Type	Evaporator (°F)	Superheat Set Point @ Bulb (°F)	Discharge Air (°F)	Return Air (°F)	Discharge Air Velocity[5] (FPM)
ORBR[2]	1150[4]	Enh.	34	6-8	38	40	380

[2] ORBR-8′ has 3 doors, ORBR-12′ has 4 doors.

[3] BTUHs/door listed are for parallel operation. Conventional ratings may be approximated by multiplying listed rating by 1.04.

[4] High efficiency fans reduce refrigeration load by 96 BTUHs/fan.

[5] Average discharge air velocity at peak of defrost.

Defrost Controls

Model	Defrosts Per Day	Run-Off Time (min)	Electric Defrost Fail-safe (min)	Electric Defrost Termination Temp. (°F)	Timed Off Defrost Fail-safe (min)	Timed Off Defrost Termination Temp. (°F)	Hot Gas Defrost Fail-safe (min)	Hot Gas Defrost Termination Temp. (°F)	Reverse Air Defrost Fail-safe (min)	Reverse Air Defrost Termination Temp. (°F)
ORBR	4[6]	6 - 8	30	47	30	40	24	47	- - -[7]	- - -

[6] If timed off defrost is utilized. If electric or hot gas defrost is utilized case only requires 1 defrost per day.

[7] NOTE: - - - not an option on this case model.

Medium Temperature Defrost Schedule

No. Per Day	Hours
1	12 midnight
2	12 am - 12 pm
3	6 am - 2 pm - 10 pm
4	12 - 6 am - 12 - 6 pm

All measurements are taken per ARI 1200 - 2002 specifications.

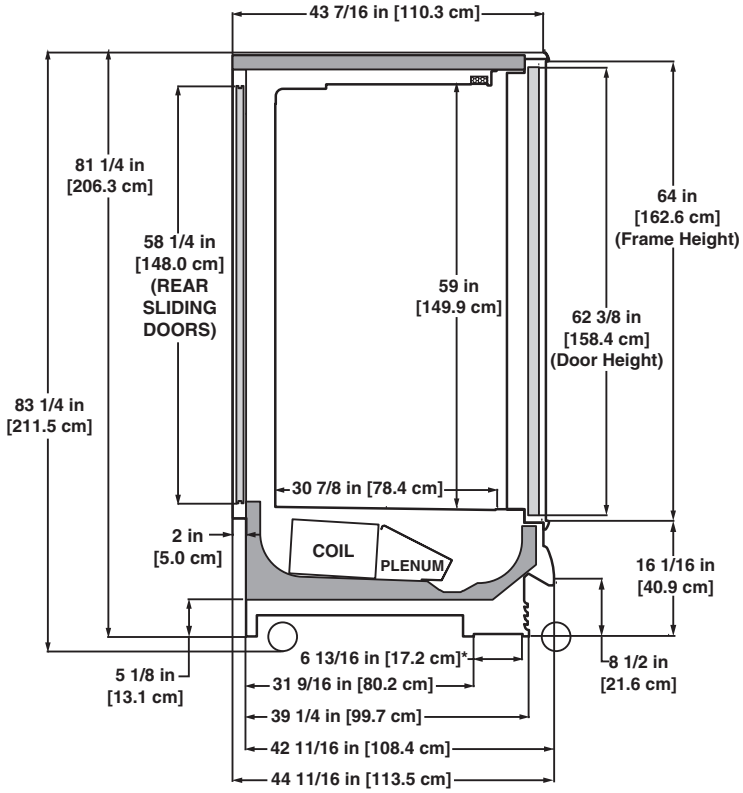

1/2 BUMPER OPTION

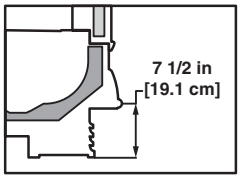

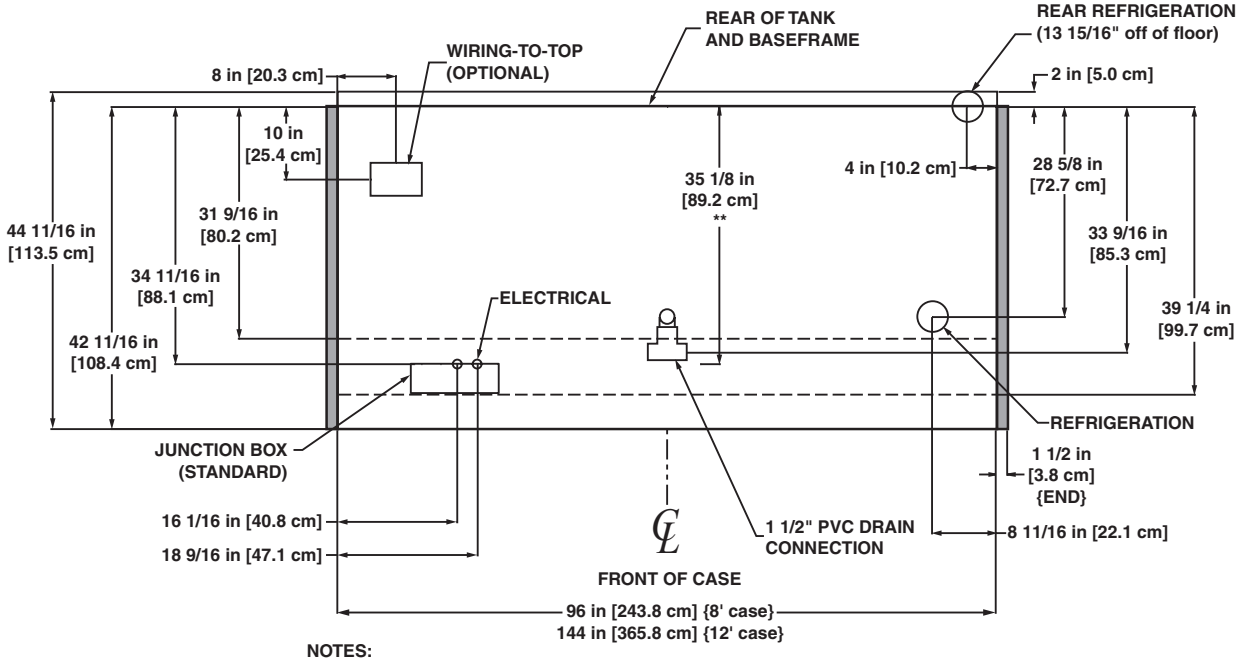

NOTES:

* STUB-UP AREA
** RECOMMENDED STUB-UP CENTERLINE FOR ELECTRICAL AND HUB DRAINS

- ENDS ADD APPROXIMATELY 1 INCH TO CASE HEIGHT
- WIRING-TO-THE-TOP- ADDS APPROXIMATELY 1 INCH TO CASE HEIGHT
- SUCTION LINE (ALL LENGTHS) 1/2"
- LIQUID LINE (ALL LENGTHS) - 3/8", LIQUID LINE w/ HOT GAS DEFROST (ALL LENGTHS) - 1/2"
- AVAILABLE SHELF SIZES: WIRE SHELVES 16", 18", 20", 22" & 23 1/2"
  SOLID SHELVES 18", 20", 22", 24" & 27"
  (TOP SHELF MUST BE 24" OR SHORTER WHEN USING 27" SHELVES.
  RECOMMENDED CONFIGURATION IS 1 - 24" SHELF AND 4 - 27" SHELVES BELOW TOP SHELF)

NSF COMPONENT c UL us

A DOVER COMPANY

High Glass Door Reach-in Beverage Merchandiser

ORBH - 2, 3, 4, 5, 6-door, 8′ & 12′

Electrical Data

Model		Fans per Case	Standard Fans 120 Volts Amps	Standard Fans 120 Volts Watts	High Efficiency Fans 120 Volts Amps	High Efficiency Fans 120 Volts Watts	Anti-Condensate Heaters 120 Volts Amps	Anti-Condensate Heaters 120 Volts Watts	Defrost Heaters 208 Volts Amps	Defrost Heaters 208 Volts Watts	Defrost Heaters 240 Volts Amps	Defrost Heaters 240 Volts Watts
ORBH	2-door	2	1.00	60	0.31	18.4	1.06	127	4.39	914	5.06	1215
	3-door	3	1.50	90	0.46	27.6	1.55	186	4.96	1032	5.71	1370
	4-door	4	2.00	120	0.61	36.8	2.07	248	6.51	1355	7.55	1813
	5-door	5	2.50	150	0.77	46.0	2.54	305	7.96	1655	9.17	2201
	6-door	6	3.00	180	0.92	55.2	3.07	368	9.40	1955	10.79	2589
	8′	3	1.50	90	0.46	27.6	1.61	193	3.85	800	4.44	1065
	12′	4	2.00	120	0.61	36.8	2.23	268	5.78	1200	6.67	1600

Lighting Data

Model		Fluorescent Lighting 120 Volts Amps	Fluorescent Lighting 120 Volts Watts	LED[1] Lighting 120 Volts Amps	LED[1] Lighting 120 Volts Watts	Total BTUH Credit for LED Lighting BTUH
ORBH	2-door	1.50	180	0.76	91	304
	3-door	1.90	228	1.14	137	310
	4-door	2.40	288	1.52	182	362
	5-door	2.90	348	1.89	227	413
	6-door	3.40	408	2.28	273	461
	8′	1.90	228	1.14	137	310
	12′	2.40	288	1.52	182	362

[1] LED lighting values based on GE Gelcore LEDs

Guidelines & Control Settings

Model[2]	BTUH/door[3]	Coil Type	Evaporator (°F)	Superheat Set Point @ Bulb (°F)	Discharge Air (°F)	Return Air (°F)	Discharge Air Velocity[5] (FPM)
ORBH-2, 3, 4, 5 & 6dr - Deli/Dairy	830[4]	Enh.	32	6-8	36	38	280
ORBH-2, 3, 4, 5 & 6dr - Beverage	800[4]	Enh.	34	6-8	38	40	280
ORBH-8′ & 12′ Deli/Dairy	930[4]	Enh.	32	6-8	36	38	280
ORBH-8′ & 12′- Beverage	900[4]	Enh.	34	6-8	38	40	280

[2] ORBH-8′ has 3 doors, ORBH-12′ has 4 doors.

[3] BTUHs/door listed are for parallel operation. Conventional ratings may be approximated by multiplying listed rating by 1.04.

[4] High efficiency fans reduce refrigeration load by 96 BTUHs/fan.

[5] Average discharge air velocity at peak of defrost.

Defrost Controls

Model	Defrosts Per Day	Run-Off Time (min)	Electric Defrost Fail-safe (min)	Electric Defrost Termination Temp. (°F)	Timed Off Defrost Fail-safe (min)	Timed Off Defrost Termination Temp. (°F)	Hot Gas Defrost Fail-safe (min)	Hot Gas Defrost Termination Temp. (°F)	Reverse Air Defrost Fail-safe (min)	Reverse Air Defrost Termination Temp. (°F)
ORBH	4[6]	6 - 8	30	47	30	40	24	47	- - -[7]	- - -

[6] If timed off defrost is utilized. If electric or hot gas defrost is utilized case only requires 1 defrost per day.

[7] NOTE: - - - not an option on this case model.

Medium Temperature Defrost Schedule

No. Per Day	Hours
1	12 midnight
2	12 am - 12 pm
3	6 am - 2 pm - 10 pm
4	12 - 6 am - 12 - 6 pm

All measurements are taken per ARI 1200 - 2002 specifications.

NSF COMPONENT

c UL us

Hill PHOENIX EXCELLENCE

A DOVER COMPANY

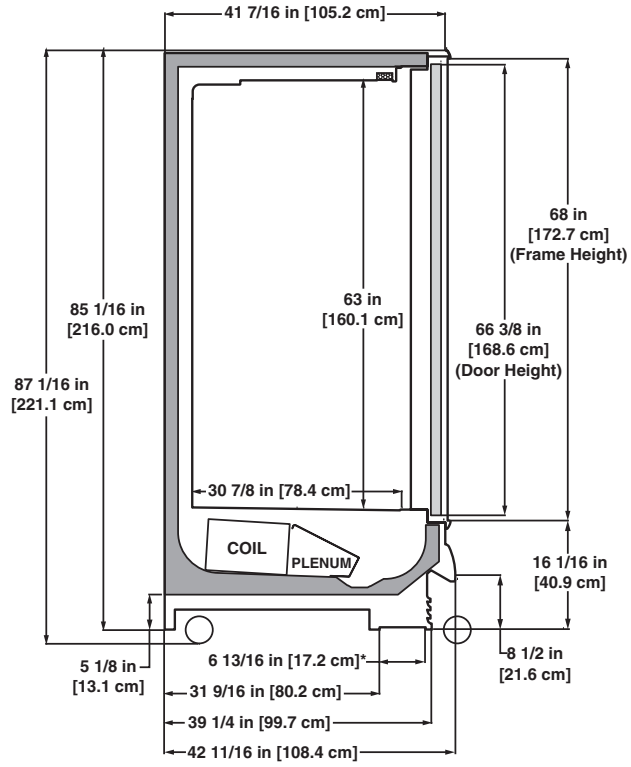

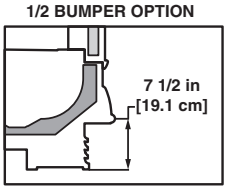

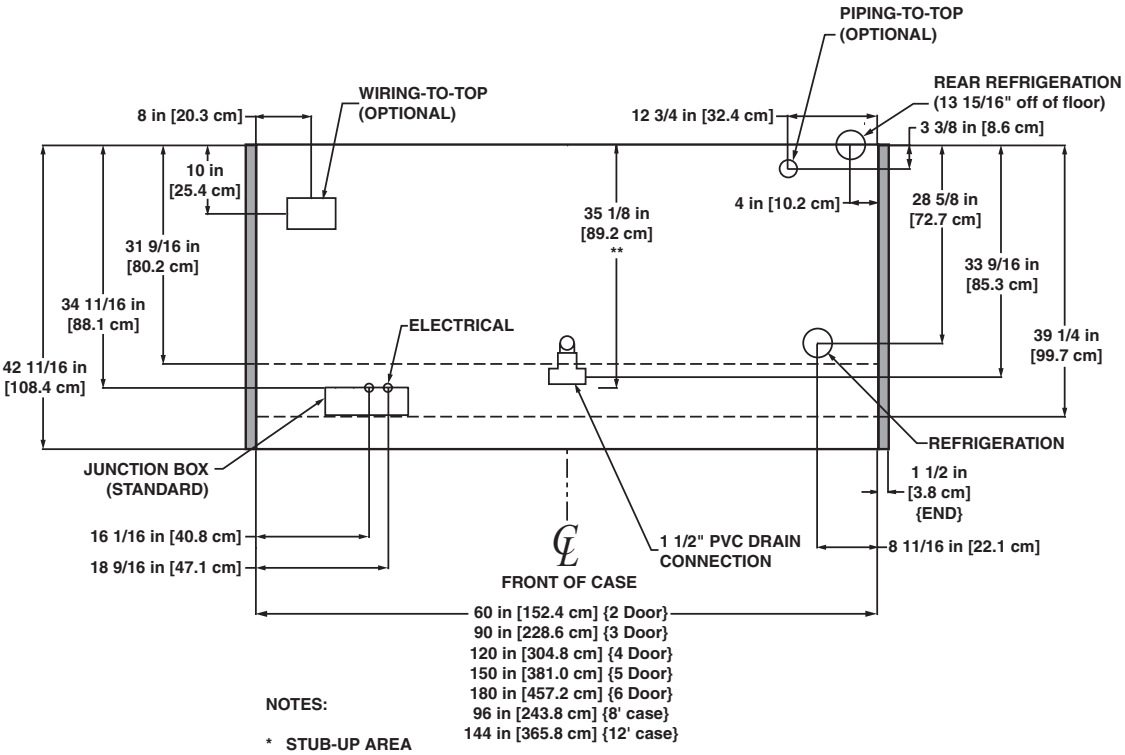

NOTES:

* STUB-UP AREA
** RECOMMENDED STUB-UP CENTERLINE FOR ELECTRICAL AND HUB DRAINS

- ENDS ADD APPROXIMATELY 1 INCH TO CASE HEIGHT
- WIRING-TO-THE-TOP- ADDS APPROXIMATELY 1 INCH TO CASE HEIGHT
- A 2" MINIMUM AIR GAP IS REQUIRED BETWEEN THE REAR OF THE CASE AND A WALL
- SUCTION LINE (ALL LENGTHS) 1/2"
- LIQUID LINE (ALL LENGTHS) - 3/8", LIQUID LINE w/ HOT GAS DEFROST (ALL LENGTHS) - 1/2"
- AVAILABLE SHELF SIZES: WIRE SHELVES 16", 18", 20", 22" & 23 1/2"
  SOLID SHELVES 18", 20", 22", 24" & 27"
  (TOP SHELF MUST BE 24" OR SHORTER WHEN USING 27" SHELVES.
  RECOMMENDED CONFIGURATION IS 1 - 24" SHELF AND 4 - 27" SHELVES BELOW TOP SHELF)

NSF COMPONENT c UL us

A DOVER COMPANY

Narrow Glass Door Reach-in Frozen Food/Ice Cream Merchandiser

ONRZ - 2, 3, 4, 5 & 6-door

Electrical Data

Model		Fans per Case	Standard Fans 120 Volts Amps	Standard Fans 120 Volts Watts	High Efficiency Fans 120 Volts Amps	High Efficiency Fans 120 Volts Watts	Defrost Heaters 208 Volts Amps	Defrost Heaters 208 Volts Watts	Defrost Heaters 240 Volts Amps	Defrost Heaters 240 Volts Watts
ONRZ	2-door	2	1.00	60	0.31	18.4	7.61[1]	2742	8.77[1]	3645
	3-door	3	1.50	90	0.46	27.6	8.59[1]	3096	9.89[1]	4110
	4-door	4	2.00	120	0.61	36.8	11.28[1]	4065	13.08[1]	5439
	5-door	5	2.50	150	0.77	46.0	13.78[1]	4965	15.88[1]	6603
	6-door	6	3.00	180	0.92	55.2	16.28[1]	5865	18.68[1]	7767

[1] Note: 3 phase load. Figure given is maximum amps per phase.

Lighting Data

Model		Fluorescent Lighting 120 Volts Amps	Fluorescent Lighting 120 Volts Watts	LED[2] Lighting 120 Volts Amps	LED[2] Lighting 120 Volts Watts	Total BTUH Credit for LED Lighting BTUH
ONRZ	2-door	1.50	180	0.76	91	304
	3-door	1.90	228	1.14	137	310
	4-door	2.40	288	1.52	182	362
	5-door	2.90	348	1.89	227	413
	6-door	3.40	408	2.28	273	461

[2] LED lighting values based on GE Gelcore LEDs

Anti-Condensate Heater Data

Model		Anthony 101 120 Volts Amps	Anthony 101 120 Volts Watts	Anthony[3] Eliminaator 120 Volts Amps	Anthony[3] Eliminaator 120 Volts Watts	Anthony[3] Eliminaator 2 120 Volts Amps	Anthony[3] Eliminaator 2 120 Volts Watts
ONRZ	2-door	3.41	409	1.75	210	1.21	145
	3-door	4.88	586	2.59	311	1.78	214
	4-door	6.34	761	3.38	406	2.30	276
	5-door	7.82	938	4.24	509	2.89	347
	6-door	9.31	1117	5.09	611	3.47	416

[3] Eliminaator values given for doors with no heat on the glass.

Guidelines & Control Settings

Model	BTUH/door[6]	Coil Type	Evaporator (°F)	Superheat Set Point @ Bulb (°F)	Discharge Air (°F)	Return Air (°F)	Discharge Air Velocity[8] (FPM)
ONRZ - F[4]	1345[7]	Enh.	-11	3-5	-3	0	460
ONRZ - C[4]	1405[7]	Enh.	-17	3-5	-8	-5	460
ONRZ - F ELIM[5]	1191[7]	Enh.	-11	3-5	-3	0	460
ONRZ - C ELIM[5]	1229[7]	Enh.	-17	3-5	-8	-5	460

[4] F = Frozen food, C = Ice cream.

[5] Data given for cases with Eliminator Doors.

[6] BTUHs/door listed are for parallel operation. Conventional ratings may be approximated by multiplying listed rating by 1.04.

[7] High efficiency fans reduce refrigeration load by 96 BTUHs/fan.

[8] Average discharge air velocity at peak of defrost.

Defrost Controls

Model	Defrosts Per Day	Run-Off Time (min)	Electric Defrost Fail-safe (min)	Electric Defrost Termination Temp. (°F)	Timed Off Defrost Fail-safe (min)	Timed Off Defrost Termination Temp. (°F)	Hot Gas Defrost Fail-safe (min)	Hot Gas Defrost Termination Temp. (°F)	Reverse Air Defrost Fail-safe (min)	Reverse Air Defrost Termination Temp. (°F)
ONRZ	1	13 - 15	46	73[9]	- - -[10]	- - -	24	73[11]	- - -	- - -

[9] The recommended location is in the center of the coil on the second pass. If using a discharge air temperature to terminate defrost, utilize a 55°F termination temp.

[10] NOTE: - - - not an option on this case model.

[11] The recommended location is on the dump line. If using a discharge air temperature to terminate defrost, utilize a 55°F termination temp.

Low Temperature Defrost Schedule

No. Per Day	Hours
1	10 pm
2	6 am - 10 pm**

All measurements are taken per ARI 1200 - 2002 specifications.

NSF COMPONENT

c UL us

HILL PHOENIX EXCELLENCE

A DOVER COMPANY

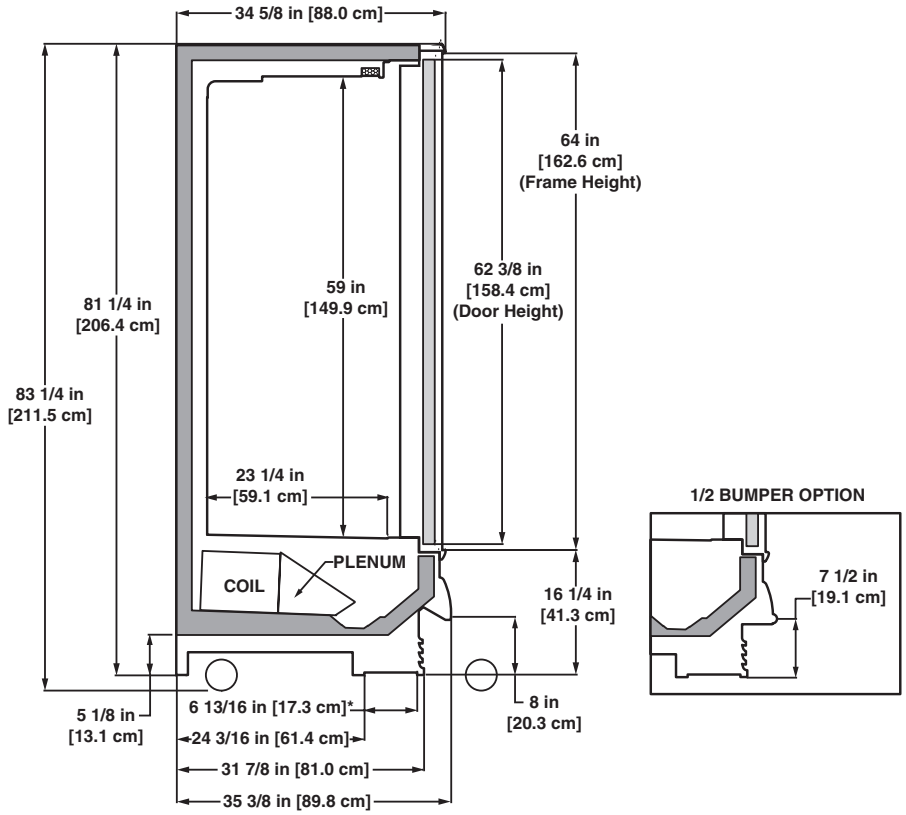

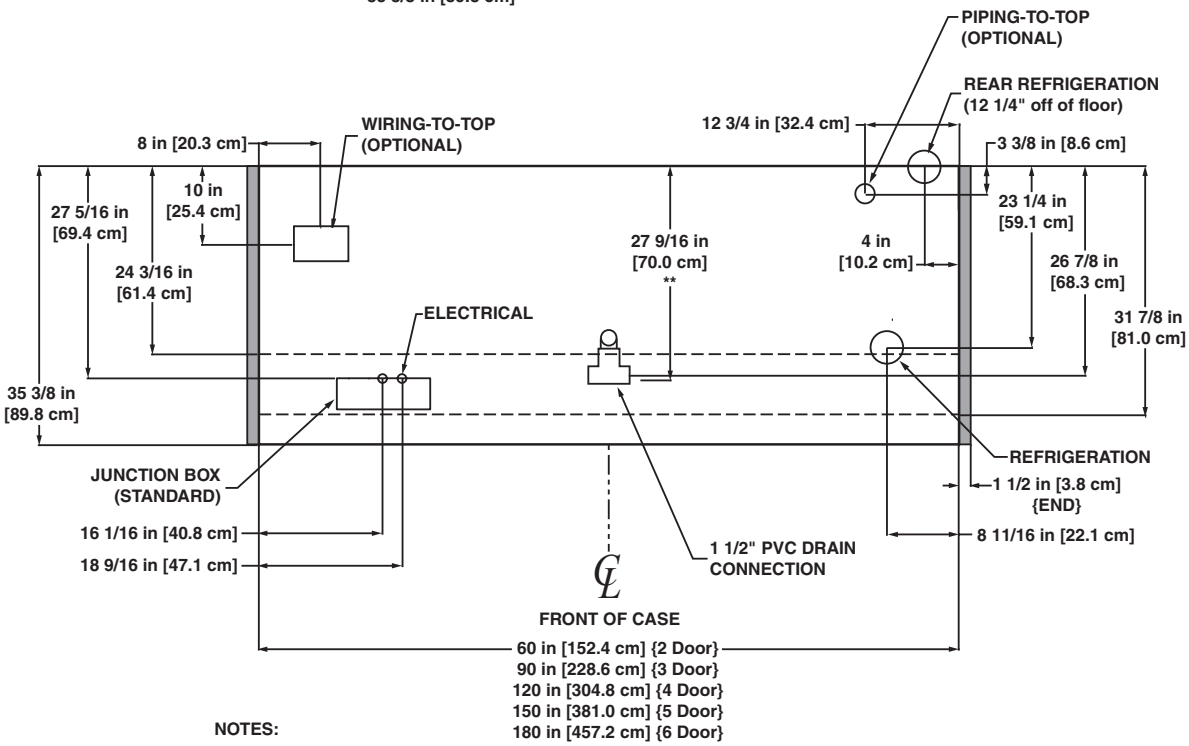

NOTES:

* STUB-UP AREA
** RECOMMENDED STUB-UP CENTERLINE FOR ELECTRICAL AND HUB DRAINS

- ENDS ADD APPROXIMATELY 1 INCH TO CASE HEIGHT
- WIRING-TO-THE-TOP- ADDS APPROXIMATELY 1 INCH TO CASE HEIGHT
- A 2" MINIMUM AIR GAP IS REQUIRED BETWEEN THE REAR OF THE CASE AND A WALL
- SUCTION LINE (2DR & 3DR) 5/8", SUCTION LINE (4DR, 5DR & 6DR) 7/8"
- LIQUID LINE (ALL LENGTHS) - 3/8", LIQUID LINE w/ HOT GAS DEFROST (ALL LENGTHS) - 1/2"
- AVAILABLE SHELF SIZES: WIRE SHELVES 16", 18", 20" & 22"
  SOLID SHELVES 18", 20" & 22"
  (TOP SHELF MUST BE 20" OR SHORTER. RECOMMENDED CONFIGURATION IS 20" SHELF AND 4 22" SHELVES BELOW TOP SHELF)

NSF COMPONENT c UL us

A DOVER COMPANY

High Narrow Glass Door Reach-in Frozen Food/Ice Cream Merchandiser

ONRZH - 2, 3, 4, 5 & 6-door

Electrical Data

Model		Fans per Case	Standard Fans 120 Volts Amps	Standard Fans 120 Volts Watts	High Efficiency Fans 120 Volts Amps	High Efficiency Fans 120 Volts Watts	Defrost Heaters 208 Volts Amps	Defrost Heaters 208 Volts Watts	Defrost Heaters 240 Volts Amps	Defrost Heaters 240 Volts Watts
ONRZH	2-door	2	1.00	60	0.31	18.4	7.61[1]	2742	8.77[1]	3645
	3-door	3	1.50	90	0.46	27.6	8.59[1]	3096	9.89[1]	4110
	4-door	4	2.00	120	0.61	36.8	11.28[1]	4065	13.08[1]	5439
	5-door	5	2.50	150	0.77	46.0	13.78[1]	4965	15.88[1]	6603
	6-door	6	3.00	180	0.92	55.2	16.28[1]	5865	18.68[1]	7767

[1] Note: 3 phase load. Figure given is maximum amps per phase.

Lighting Data

Model		Fluorescent Lighting 120 Volts Amps	Fluorescent Lighting 120 Volts Watts	LED[2] Lighting 120 Volts Amps	LED[2] Lighting 120 Volts Watts	Total BTUH Credit for LED Lighting BTUH
ONRZH	2-door	1.50	180	0.76	91	304
	3-door	1.90	228	1.14	137	310
	4-door	2.40	288	1.52	182	362
	5-door	2.90	348	1.89	227	413
	6-door	3.40	408	2.28	273	461

[2] LED lighting values based on GE Gelcore LEDs

Anti-Condensate Heater Data

Model		Anthony 101 120 Volts Amps	Anthony 101 120 Volts Watts	Anthony[3] Eliminaator 120 Volts Amps	Anthony[3] Eliminaator 120 Volts Watts	Anthony[3] Eliminaator 2 120 Volts Amps	Anthony[3] Eliminaator 2 120 Volts Watts
ONRZH	2-door	3.44	413	1.78	214	1.24	149
	3-door	5.00	600	2.62	314	1.81	217
	4-door	6.42	770	3.45	414	2.37	284
	5-door	7.95	954	4.33	520	2.98	358
	6-door	9.49	1139	5.18	622	3.56	427

[3] Eliminaator values given for doors with no heat on the glass.

Guidelines & Control Settings

Model	BTUH/door[6]	Coil Type	Evaporator (°F)	Superheat Set Point @ Bulb (°F)	Discharge Air (°F)	Return Air (°F)	Discharge Air Velocity[8] (FPM)
ONRZH - F[4]	1345[7]	Enh.	-11	3-5	-3	0	405
ONRZH - C[4]	1405[7]	Enh.	-17	3-5	-8	-5	405
ONRZH - F ELIM[5]	1191[7]	Enh.	-11	3-5	-3	0	405
ONRZH - C ELIM[5]	1229[7]	Enh.	-17	3-5	-8	-5	405

[4] F = Frozen food, C = Ice cream.

[5] Data given for cases with Eliminator Doors.

[6] BTUHs/door listed are for parallel operation. Conventional ratings may be approximated by multiplying listed rating by 1.04.

[7] High efficiency fans reduce refrigeration load by 96 BTUHs/fan.

[8] Average discharge air velocity at peak of defrost.

Defrost Controls

Model	Defrosts Per Day	Run-Off Time (min)	Electric Defrost Fail-safe (min)	Electric Defrost Termination Temp. (°F)	Timed Off Defrost Fail-safe (min)	Timed Off Defrost Termination Temp. (°F)	Hot Gas Defrost Fail-safe (min)	Hot Gas Defrost Termination Temp. (°F)	Reverse Air Defrost Fail-safe (min)	Reverse Air Defrost Termination Temp. (°F)
ONRZH	1	13 - 15	46	73[9]	- - -[10]	- - -	24	73[11]	- - -	- - -

[9] The recommended location is in the center of the coil on the second pass. If using a discharge air temperature to terminate defrost, utilize a 55°F termination temp.

[10] NOTE: - - - not an option on this case model.

[11] The recommended location is on the dump line. If using a discharge air temperature to terminate defrost, utilize a 55°F termination temp.

Low Temperature Defrost Schedule

No. Per Day	Hours
1	10 pm
2	6 am - 10 pm**

All measurements are taken per ARI 1200 - 2002 specifications.

NSF COMPONENT

c UL us

HILL PHOENIX EXCELLENCE

A DOVER COMPANY

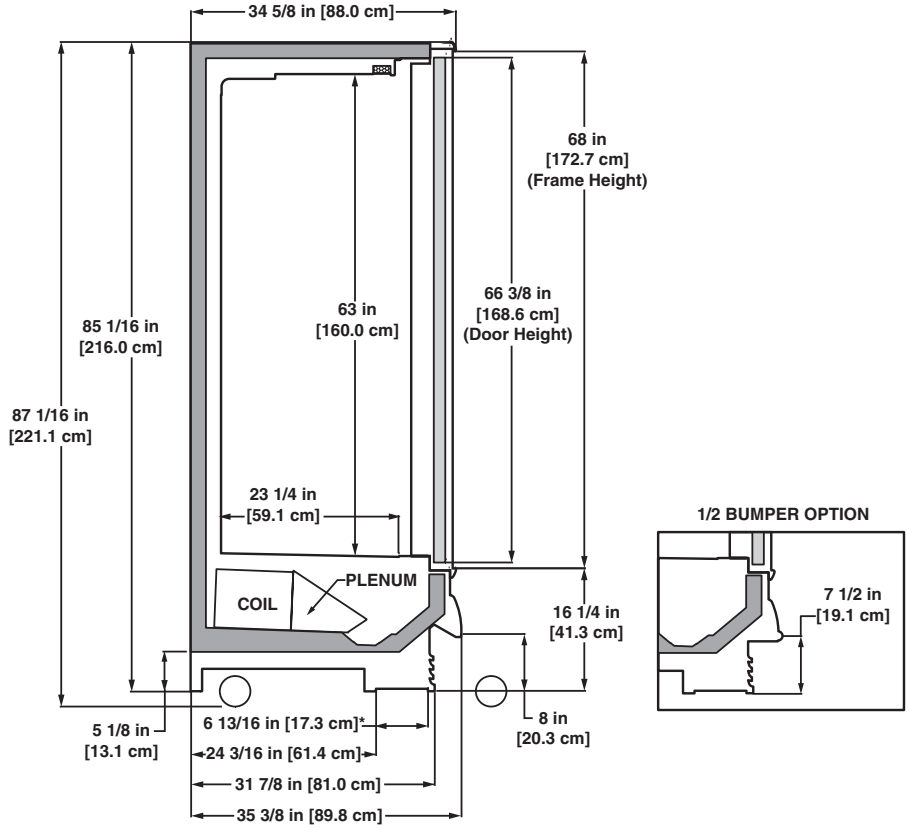

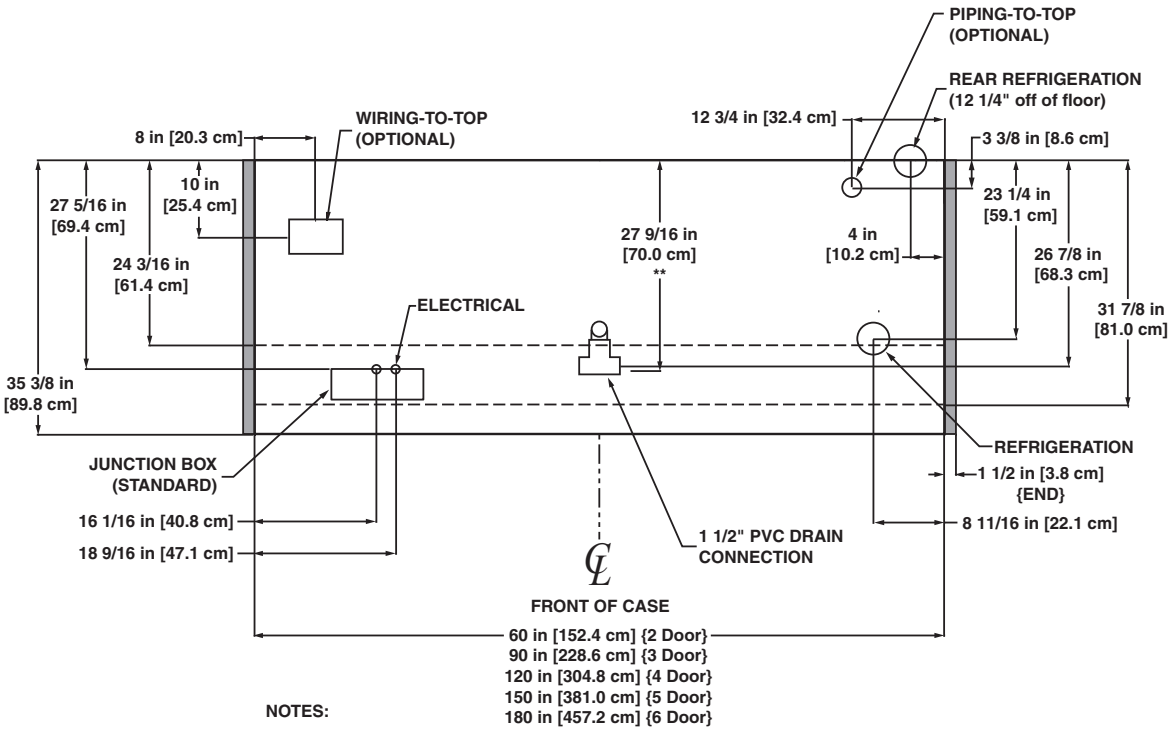

NOTES:

* STUB-UP AREA
** RECOMMENDED STUB-UP CENTERLINE FOR ELECTRICAL AND HUB DRAINS

- ENDS ADD APPROXIMATELY 1 INCH TO CASE HEIGHT
- WIRING-TO-THE-TOP- ADDS APPROXIMATELY 1 INCH TO CASE HEIGHT
- A 2" MINIMUM AIR GAP IS REQUIRED BETWEEN THE REAR OF THE CASE AND A WALL
- SUCTION LINE (2DR & 3DR) 5/8", SUCTION LINE (4DR, 5DR & 6DR) 7/8"
- LIQUID LINE (ALL LENGTHS) - 3/8", LIQUID LINE w/ HOT GAS DEFROST (ALL LENGTHS) - 1/2"
- AVAILABLE SHELF SIZES: WIRE SHELVES 16", 18", 20" & 22"
  SOLID SHELVES 18", 20" & 22"
  (TOP SHELF MUST BE 20" OR SHORTER. RECOMMENDED CONFIGURATION IS 20" SHELF AND 4 22" SHELVES BELOW TOP SHELF)

Glass Door Reach-in Frozen Food/Ice Cream Merchandiser

ORZ - 2, 3, 4, 5 & 6-door

Electrical Data

Model		Fans per Case	Standard Fans 120 Volts Amps	Standard Fans 120 Volts Watts	High Efficiency Fans 120 Volts Amps	High Efficiency Fans 120 Volts Watts	Defrost Heaters 208 Volts Amps	Defrost Heaters 208 Volts Watts	Defrost Heaters 240 Volts Amps	Defrost Heaters 240 Volts Watts
ORZ	2-door	2	1.00	60	0.31	18.4	7.61[1]	2742	8.77[1]	3645
	3-door	3	1.50	90	0.46	27.6	8.59[1]	3096	9.89[1]	4110
	4-door	4	2.00	120	0.61	36.8	11.28[1]	4065	13.08[1]	5439
	5-door	5	2.50	150	0.77	46.0	13.78[1]	4965	15.88[1]	6603
	6-door	6	3.00	180	0.92	55.2	16.28[1]	5865	18.68[1]	7767

[1] Note: 3 phase load. Figure given is maximum amps per phase.

Lighting Data

Model		Fluorescent Lighting 120 Volts Amps	Fluorescent Lighting 120 Volts Watts	LED[2] Lighting 120 Volts Amps	LED[2] Lighting 120 Volts Watts	Total BTUH Credit for LED Lighting BTUH
ORZ	2-door	1.50	180	0.76	91	304
	3-door	1.90	228	1.14	137	310
	4-door	2.40	288	1.52	182	362
	5-door	2.90	348	1.89	227	413
	6-door	3.40	408	2.28	273	461

[2] LED lighting values based on GE Gelcore LEDs

Anti-Condensate Heater Data

Model		Anthony 101 120 Volts Amps	Anthony 101 120 Volts Watts	Anthony[3] Eliminaator 120 Volts Amps	Anthony[3] Eliminaator 120 Volts Watts	Anthony[3] Eliminaator 2 120 Volts Amps	Anthony[3] Eliminaator 2 120 Volts Watts
ORZ	2-door	3.41	409	1.75	210	1.21	145
	3-door	4.88	586	2.59	311	1.78	214
	4-door	6.34	761	3.38	406	2.30	276
	5-door	7.82	938	4.24	509	2.89	347
	6-door	9.31	1117	5.09	611	3.47	416

[3] Eliminaator values given for doors with no heat on the glass.

Guidelines & Control Settings

Model	BTUH/door[6]	Coil Type	Evaporator (°F)	Superheat Set Point @ Bulb (°F)	Discharge Air (°F)	Return Air (°F)	Discharge Air Velocity[8] (FPM)
ORZ - F[4]	1345[7]	Enh.	-11	3-5	-3	0	380
ORZ - C[4]	1405[7]	Enh.	-17	3-5	-8	-5	380
ORZ - F ELIM[5]	1191[7]	Enh.	-11	3-5	-3	0	380
ORZ - C ELIM[5]	1229[7]	Enh.	-17	3-5	-8	-5	380

[4] F = Frozen food, C = Ice cream.

[5] Data given for cases with Eliminator Doors.

[6] BTUHs/door listed are for parallel operation. Conventional ratings may be approximated by multiplying listed rating by 1.04.

[7] High efficiency fans reduce refrigeration load by 96 BTUHs/fan.

[8] Average discharge air velocity at peak of defrost.

Defrost Controls

Model	Defrosts Per Day	Run-Off Time (min)	Electric Defrost Fail-safe (min)	Electric Defrost Termination Temp. (°F)	Timed Off Defrost Fail-safe (min)	Timed Off Defrost Termination Temp. (°F)	Hot Gas Defrost Fail-safe (min)	Hot Gas Defrost Termination Temp. (°F)	Reverse Air Defrost Fail-safe (min)	Reverse Air Defrost Termination Temp. (°F)
ORZ	1	13 - 15	46	73[9]	- - -[10]	- - -	24	73[11]	- - -	- - -

[9] The recommended location is in the center of the coil on the second pass. If using a discharge air temperature to terminate defrost, utilize a 55°F termination temp.

[10] NOTE: - - - not an option on this case model.

[11] The recommended location is on the dump line. If using a discharge air temperature to terminate defrost, utilize a 55°F termination temp.

Low Temperature Defrost Schedule

No. Per Day	Hours
1	10 pm
2	6 am - 10 pm**

All measurements are taken per ARI 1200 - 2002 specifications.

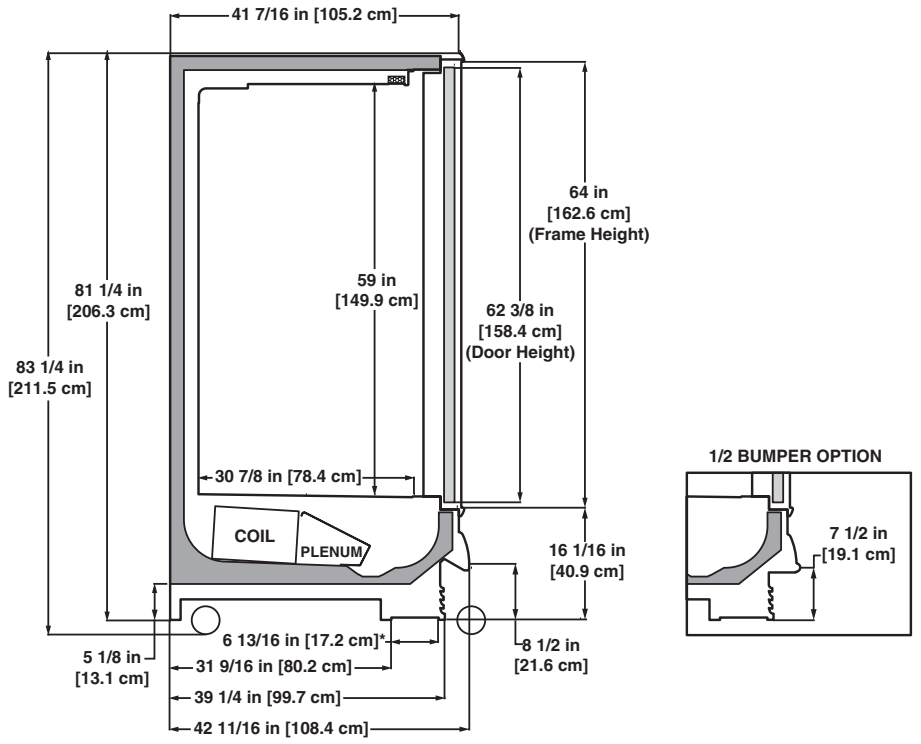

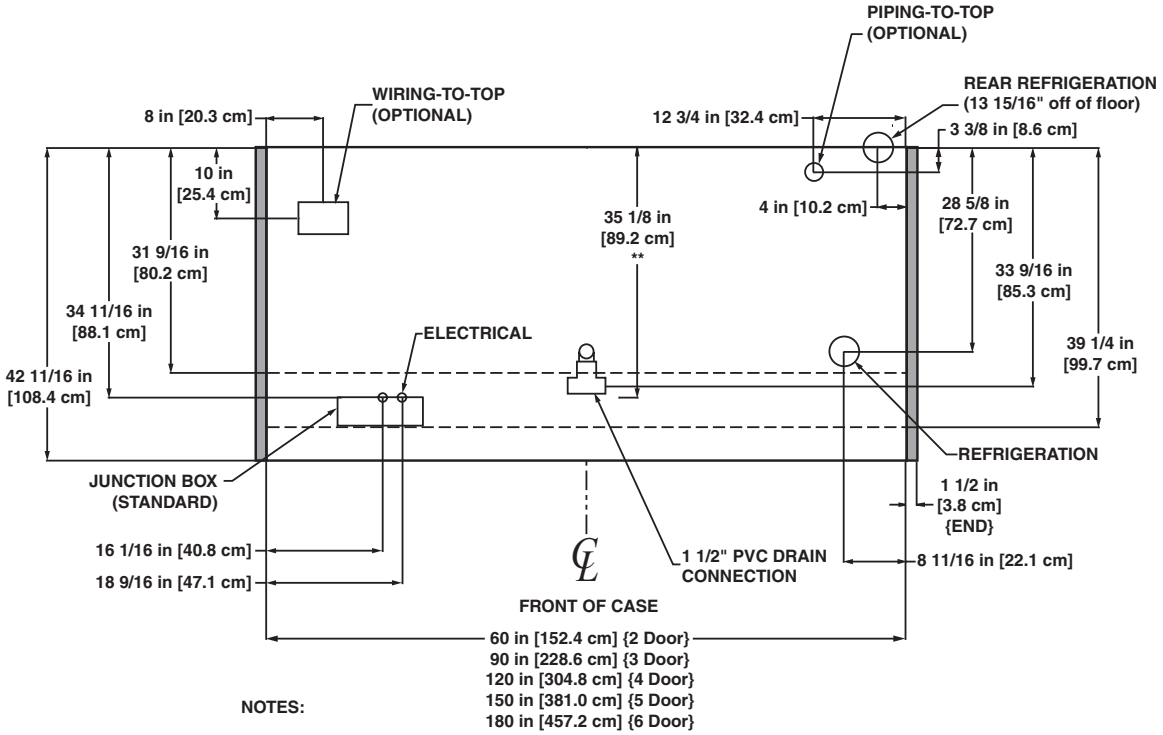

NOTES:

* STUB-UP AREA
** RECOMMENDED STUB-UP CENTERLINE FOR ELECTRICAL AND HUB DRAINS

- ENDS ADD APPROXIMATELY 1 INCH TO CASE HEIGHT
- WIRING-TO-THE-TOP- ADDS APPROXIMATELY 1 INCH TO CASE HEIGHT
- A 2" MINIMUM AIR GAP IS REQUIRED BETWEEN THE REAR OF THE CASE AND A WALL
- SUCTION LINE (2DR & 3DR) 5/8", SUCTION LINE (4DR, 5DR & 6DR) 7/8"
- LIQUID LINE (ALL LENGTHS) - 3/8", LIQUID LINE w/ HOT GAS DEFROST (ALL LENGTHS) - 1/2"
- AVAILABLE SHELF SIZES: WIRE SHELVES 16", 18", 20", 22" & 23 1/2"
  SOLID SHELVES 18", 20", 22", 24" & 27"

(TOP SHELF MUST BE 24" OR SHORTER WHEN USING 27" SHELVES.
RECOMMENDED CONFIGURATION IS 1 - 24" SHELF AND 4 - 27" SHELVES BELOW TOP SHELF)

NSF COMPONENT c UL us

A DOVER COMPANY

High Glass Door Reach-in Frozen Food/Ice Cream Merchandiser

ORZH - 2, 3, 4, 5 & 6-door

Electrical Data

Model		Fans per Case	Standard Fans 120 Volts Amps	Standard Fans 120 Volts Watts	High Efficiency Fans 120 Volts Amps	High Efficiency Fans 120 Volts Watts	Defrost Heaters 208 Volts Amps	Defrost Heaters 208 Volts Watts	Defrost Heaters 240 Volts Amps	Defrost Heaters 240 Volts Watts
ORZH	2-door	2	1.00	60	0.31	18.4	7.61[1]	2742	8.77[1]	3645
	3-door	3	1.50	90	0.46	27.6	8.59[1]	3096	9.89[1]	4110
	4-door	4	2.00	120	0.61	36.8	11.28[1]	4065	13.08[1]	5439
	5-door	5	2.50	150	0.77	46.0	13.78[1]	4965	15.88[1]	6603
	6-door	6	3.00	180	0.92	55.2	16.28[1]	5865	18.68[1]	7767

[1] Note: 3 phase load. Figure given is maximum amps per phase.

Lighting Data

Model		Fluorescent Lighting 120 Volts Amps	Fluorescent Lighting 120 Volts Watts	LED[2] Lighting 120 Volts Amps	LED[2] Lighting 120 Volts Watts	Total BTUH Credit for LED Lighting BTUH
ORZH	2-door	1.50	180	0.76	91	304
	3-door	1.90	228	1.14	137	310
	4-door	2.40	288	1.52	182	362
	5-door	2.90	348	1.89	227	413
	6-door	3.40	408	2.28	273	461

[2] LED lighting values based on GE Gelcore LEDs

Anti-Condensate Heater Data

Model		Anthony 101 120 Volts Amps	Anthony 101 120 Volts Watts	Anthony[3] Eliminaator 120 Volts Amps	Anthony[3] Eliminaator 120 Volts Watts	Anthony[3] Eliminaator 2 120 Volts Amps	Anthony[3] Eliminaator 2 120 Volts Watts
ORZH	2-door	3.44	413	1.78	214	1.24	149
	3-door	5.00	600	2.62	314	1.81	217
	4-door	6.42	770	3.45	414	2.37	284
	5-door	7.95	954	4.33	520	2.98	358
	6-door	9.49	1139	5.18	622	3.56	427

[3] Eliminaator values given for doors with no heat on the glass.

Guidelines & Control Settings

Model	BTUH/door[6]	Coil Type	Evaporator (°F)	Superheat Set Point @ Bulb (°F)	Discharge Air (°F)	Return Air (°F)	Discharge Air Velocity[8] (FPM)
ORZH - F[4]	1345[7]	Enh.	-11	3-5	-3	0	405
ORZH - C[4]	1405[7]	Enh.	-17	3-5	-8	-5	405
ORZH - F ELIM[5]	1191[7]	Enh.	-11	3-5	-3	0	405
ORZH - C ELIM[5]	1229[7]	Enh.	-17	3-5	-8	-5	405

[4] F = Frozen food, C = Ice cream.

[5] Data given for cases with Eliminator Doors.

[6] BTUHs/door listed are for parallel operation. Conventional ratings may be approximated by multiplying listed rating by 1.04.

[7] High efficiency fans reduce refrigeration load by 96 BTUHs/fan.

[8] Average discharge air velocity at peak of defrost.

Defrost Controls

Model	Defrosts Per Day	Run-Off Time (min)	Electric Defrost Fail-safe (min)	Electric Defrost Termination Temp. (°F)	Timed Off Defrost Fail-safe (min)	Timed Off Defrost Termination Temp. (°F)	Hot Gas Defrost Fail-safe (min)	Hot Gas Defrost Termination Temp. (°F)	Reverse Air Defrost Fail-safe (min)	Reverse Air Defrost Termination Temp. (°F)
ORZH	1	13 - 15	46	73[9]	- - -[10]	- - -	24	73[11]	- - -	- - -

[9] The recommended location is in the center of the coil on the second pass. If using a discharge air temperature to terminate defrost, utilize a 55°F termination temp.

[10] NOTE: - - - not an option on this case model.

[11] The recommended location is on the dump line. If using a discharge air temperature to terminate defrost, utilize a 55°F termination temp.

Low Temperature Defrost Schedule

No. Per Day	Hours
1	10 pm
2	6 am - 10 pm**

All measurements are taken per ARI 1200 - 2002 specifications.

NSF COMPONENT

c UL us

Hill PHOENIX EXCELLENCE

A DOVER COMPANY

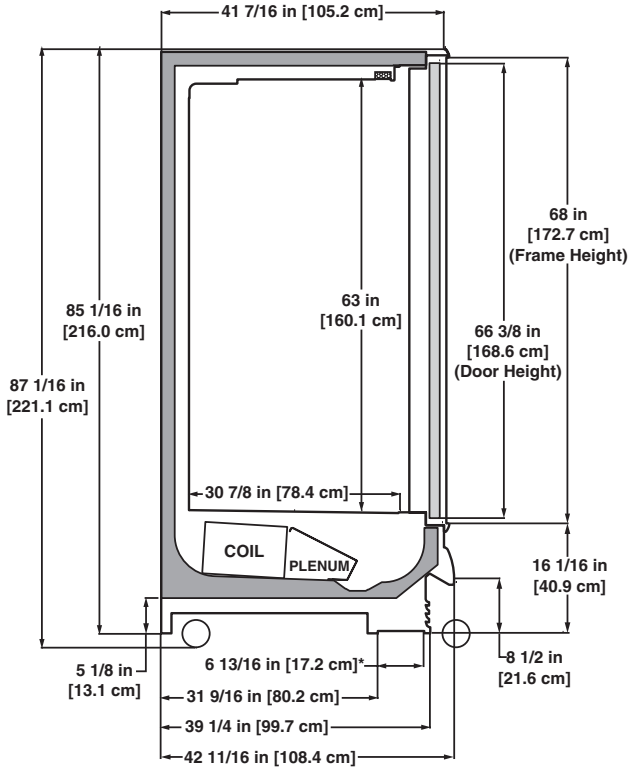

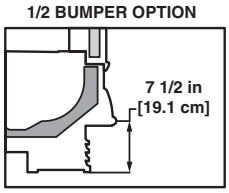

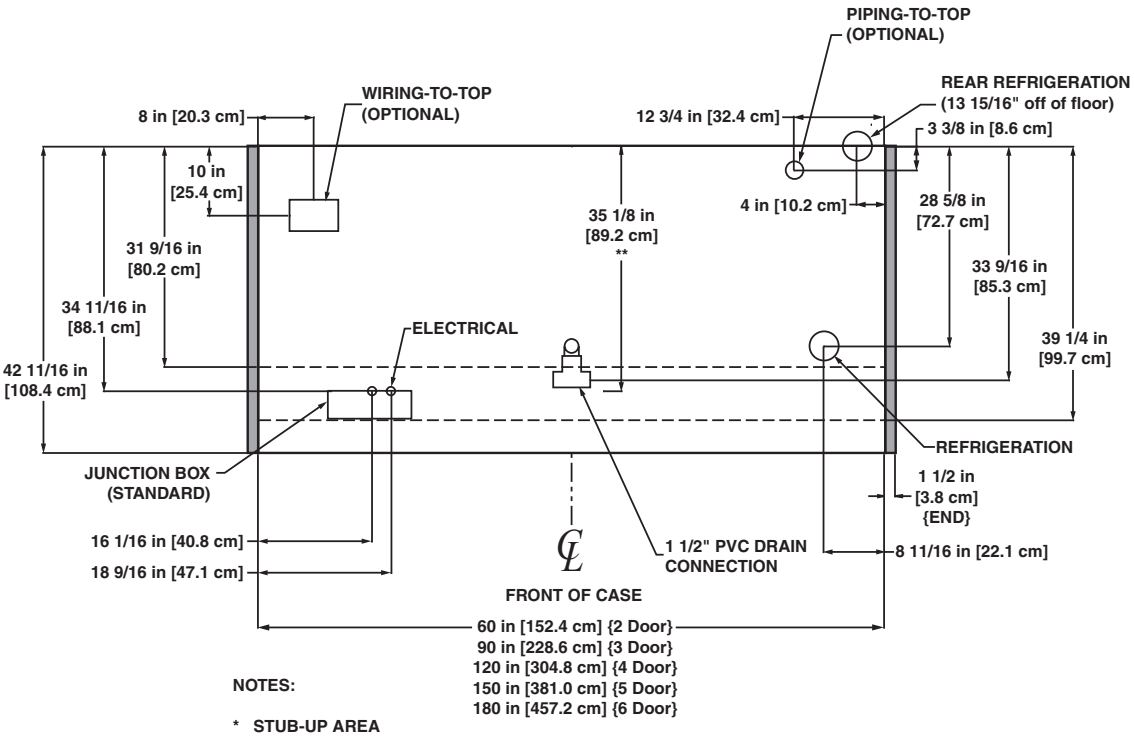

NOTES:

* STUB-UP AREA
** RECOMMENDED STUB-UP CENTERLINE FOR ELECTRICAL AND HUB DRAINS

- ENDS ADD APPROXIMATELY 1 INCH TO CASE HEIGHT
- WIRING-TO-THE-TOP- ADDS APPROXIMATELY 1 INCH TO CASE HEIGHT
- A 2" MINIMUM AIR GAP IS REQUIRED BETWEEN THE REAR OF THE CASE AND A WALL
- SUCTION LINE (2DR & 3DR) 5/8", SUCTION LINE (4DR, 5DR & 6DR) 7/8"
- LIQUID LINE (ALL LENGTHS) - 3/8", LIQUID LINE w/ HOT GAS DEFROST (ALL LENGTHS) - 1/2"
- AVAILABLE SHELF SIZES: WIRE SHELVES 16", 18", 20", 22" & 23 1/2"
  SOLID SHELVES 18", 20", 22", 24" & 27"
  (TOP SHELF MUST BE 24" OR SHORTER WHEN USING 27" SHELVES.
  RECOMMENDED CONFIGURATION IS 1 - 24" SHELF AND 4 - 27" SHELVES BELOW
  TOP SHELF)

Narrow Glass Door Reach-in Back-to-Back Frozen Food/Ice Cream Merchandiser

ONRIZ - 2, 3, 4, 5 & 6-door

Electrical Data

Model		Doors per Case	Fans per Case	Standard Fans 120 Volts Amps	Standard Fans 120 Volts Watts	High Efficiency Fans 120 Volts Amps	High Efficiency Fans 120 Volts Watts	Defrost Heaters 208 Volts Amps	Defrost Heaters 208 Volts Watts	Defrost Heaters 240 Volts Amps	Defrost Heaters 240 Volts Watts
ONRIZ	2-dr	4	4	2.00	120	0.61	36.8	15.22[1]	5484	17.54[1]	7290
	3-dr	6	6	3.00	180	0.92	55.2	17.18[1]	6192	19.78[1]	8220
	4-dr	8	8	4.00	240	1.22	73.6	22.56[1]	8130	26.16[1]	10878
	5-dr	10	10	5.00	300	1.53	92.0	27.56[1]	9930	31.76[1]	13206
	6-dr	12	12	6.00	360	1.84	110.4	32.56[1]	11730	37.36[1]	15534

[1] Note: 3 phase load. Figure given is maximum amps per phase.

Lighting Data

Model		Fluorescent Lighting 120 Volts Amps	Fluorescent Lighting 120 Volts Watts	LED[2] Lighting 120 Volts Amps	LED[2] Lighting 120 Volts Watts	Total BTUH Credit for LED Lighting BTUH
ONRIZ	2-door	3.00	360	1.52	182	607
	3-door	3.80	456	2.28	274	621
	4-door	4.80	576	3.03	364	723
	5-door	5.80	696	3.78	454	826
	6-door	6.80	816	4.56	546	922

[2] LED lighting values based on GE Gelcore LEDs

Anti-Condensate Heater Data

Model		Anthony 101 120 Volts Amps	Anthony 101 120 Volts Watts	Anthony[3] Eliminaator 120 Volts Amps	Anthony[3] Eliminaator 120 Volts Watts	Anthony[3] Eliminaator 2 120 Volts Amps	Anthony[3] Eliminaator 2 120 Volts Watts
ONRIZ	2-door	6.82	818	3.50	420	2.42	290
	3-door	9.76	1171	5.18	622	3.56	428
	4-door	12.68	1522	6.76	811	4.60	552
	5-door	15.64	1877	8.48	1018	5.78	694
	6-door	18.62	2234	10.18	1222	6.94	832

[3] Eliminaator values given for doors with no heat on the glass.

Guidelines & Control Settings

Model	BTUH/door[6]	Coil Type	Evaporator (°F)	Superheat Set Point @ Bulb (°F)	Discharge Air (°F)	Return Air (°F)	Discharge Air Velocity[8] (FPM)
ONRIZ - F[4]	1162[7]	Enh.	-11	3-5	-3	0	460
ONRIZ - C[4]	1234[7]	Enh.	-17	3-5	-8	-5	460
ONRIZ - F ELIM[5]	1062[7]	Enh.	-11	3-5	-3	0	460
ONRIZ - C ELIM[5]	1079[7]	Enh.	-17	3-5	-8	-5	460

[4] F = Frozen food, C = Ice cream.

[5] Data given for cases with Eliminator Doors.

[6] BTUHs/door listed are for parallel operation. Conventional ratings may be approximated by multiplying listed rating by 1.04. BTUHs are listed per door/per side. These do not include both sides of the case.

[7] High efficiency fans reduce refrigeration load by 96 BTUHs/fan.

[8] Average discharge air velocity at peak of defrost.

Defrost Controls

Model	Defrosts Per Day	Run-Off Time (min)	Electric Defrost Fail-safe (min)	Electric Defrost Termination Temp. (°F)	Timed Off Defrost Fail-safe (min)	Timed Off Defrost Termination Temp. (°F)	Hot Gas Defrost Fail-safe (min)	Hot Gas Defrost Termination Temp. (°F)	Reverse Air Defrost Fail-safe (min)	Reverse Air Defrost Termination Temp. (°F)
ONRIZ	1	13 - 15	46	73[9]	- - -[10]	- - -	24	73[11]	- - -	- - -

[9] The recommended location is in the center of the coil on the second pass. If using a discharge air temperature to terminate defrost, utilize a 55°F termination temp.

[10] NOTE: - - - not an option on this case model.

[11] The recommended location is on the dump line. If using a discharge air temperature to terminate defrost, utilize a 55°F termination temp.

Low Temperature Defrost Schedule

No. Per Day	Hours
1	10 pm
2	6 am - 10 pm**

All measurements are taken per ARI 1200 - 2002 specifications.

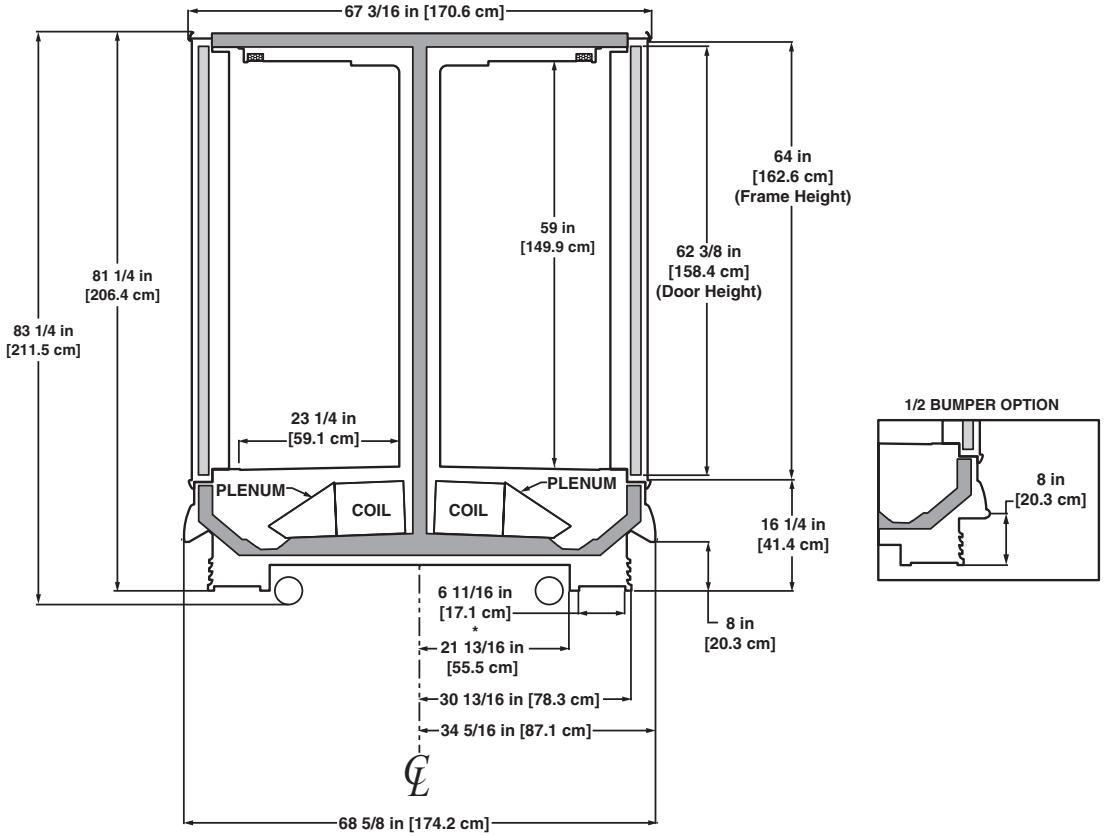

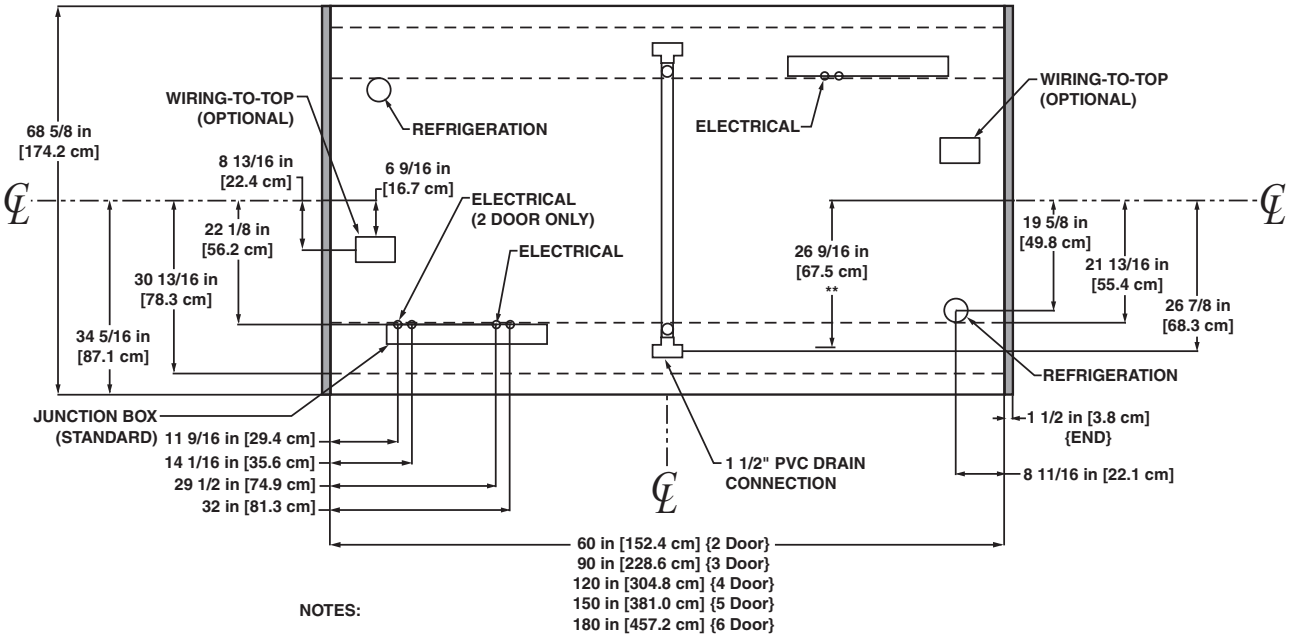

NOTES:

* STUB-UP AREA
** RECOMMENDED STUB-UP CENTERLINE FOR ELECTRICAL AND HUB DRAINS

- ENDS ADD APPROXIMATELY 1 INCH TO CASE HEIGHT
- WIRING-TO-THE-TOP- ADDS APPROXIMATELY 1 INCH TO CASE HEIGHT
- SUCTION LINE (2DR & 3DR) 5/8", SUCTION LINE (4DR, 5DR & 6DR) 7/8"
- LIQUID LINE (ALL LENGTHS) - 3/8", LIQUID LINE w/ HOT GAS DEFROST (ALL LENGTHS) - 1/2"
- AVAILABLE SHELF SIZES: WIRE SHELVES 16", 18", 20" & 22"
  SOLID SHELVES 18", 20" & 22"
  (TOP SHELF MUST BE 20" OR SHORTER. RECOMMENDED CONFIGURATION IS 20" SHELF AND 4 22" SHELVES BELOW TOP SHELF)

High Narrow Glass Door Reach-in Back-to-Back Frozen Food/Ice Cream Merchandiser

ONRIZH - 2, 3, 4, 5 & 6-door

Electrical Data

Model		Doors per Case	Fans per Case	Standard Fans 120 Volts Amps	Standard Fans 120 Volts Watts	High Efficiency Fans 120 Volts Amps	High Efficiency Fans 120 Volts Watts	Defrost Heaters 208 Volts Amps	Defrost Heaters 208 Volts Watts	Defrost Heaters 240 Volts Amps	Defrost Heaters 240 Volts Watts
ONRIZH	2-dr	4	4	2.00	120	0.61	36.8	15.22[1]	5484	17.54[1]	7290
	3-dr	6	6	3.00	180	0.92	55.2	17.18[1]	6192	19.78[1]	8220
	4-dr	8	8	4.00	240	1.22	73.6	22.56[1]	8130	26.16[1]	10878
	5-dr	10	10	5.00	300	1.53	92.0	27.56[1]	9930	31.76[1]	13206
	6-dr	12	12	6.00	360	1.84	110.4	32.56[1]	11730	37.36[1]	15534

[1] Note: 3 phase load. Figure given is maximum amps per phase.

Lighting Data

Model		Fluorescent Lighting 120 Volts Amps	Fluorescent Lighting 120 Volts Watts	LED[2] Lighting 120 Volts Amps	LED[2] Lighting 120 Volts Watts	Total BTUH Credit for LED Lighting BTUH
ONRIZH	2-door	3.00	360	1.52	182	607
	3-door	3.80	456	2.28	274	621
	4-door	4.80	576	3.03	364	723
	5-door	5.80	696	3.78	454	826
	6-door	6.80	816	4.56	546	922

[2] LED lighting values based on GE Gelcore LEDs

Anti-Condensate Heater Data

Model		Anthony 101 120 Volts Amps	Anthony 101 120 Volts Watts	Anthony[3] Eliminaator 120 Volts Amps	Anthony[3] Eliminaator 120 Volts Watts	Anthony[3] Eliminaator 2 120 Volts Amps	Anthony[3] Eliminaator 2 120 Volts Watts
ONRIZH	2-door	6.88	826	3.56	427	2.48	298
	3-door	10.00	1200	5.24	629	3.62	434
	4-door	12.84	1541	6.90	828	4.74	568
	5-door	15.90	1908	8.66	1039	5.96	716
	6-door	18.98	2278	10.34	1240	7.12	854

[3] Eliminaator values given for doors with no heat on the glass.

Guidelines & Control Settings

Model	BTUH/door[6]	Coil Type	Evaporator (°F)	Superheat Set Point @ Bulb (°F)	Discharge Air (°F)	Return Air (°F)	Discharge Air Velocity[8] (FPM)
ONRIZH - F[4]	1162[7]	Enh.	-11	3-5	-3	0	460
ONRIZH - C[4]	1234[7]	Enh.	-17	3-5	-8	-5	460
ONRIZH - F ELIM[5]	1062[7]	Enh.	-11	3-5	-3	0	460
ONRIZH - C ELIM[5]	1079[7]	Enh.	-17	3-5	-8	-5	460

[4] F = Frozen food, C = Ice cream.

[5] Data given for cases with Eliminator Doors.

[6] BTUHs/door listed are for parallel operation. Conventional ratings may be approximated by multiplying listed rating by 1.04. BTUHs are listed per door/per side. These do not include both sides of the case.

[7] High efficiency fans reduce refrigeration load by 96 BTUHs/fan.

[8] Average discharge air velocity at peak of defrost.

Defrost Controls

Model	Defrosts Per Day	Run-Off Time (min)	Electric Defrost Fail-safe (min)	Electric Defrost Termination Temp. (°F)	Timed Off Defrost Fail-safe (min)	Timed Off Defrost Termination Temp. (°F)	Hot Gas Defrost Fail-safe (min)	Hot Gas Defrost Termination Temp. (°F)	Reverse Air Defrost Fail-safe (min)	Reverse Air Defrost Termination Temp. (°F)
ONRIZH	1	13 - 15	46	73[9]	- - -[10]	- - -	24	73[11]	- - -	- - -

[9] The recommended location is in the center of the coil on the second pass. If using a discharge air temperature to terminate defrost, utilize a 55°F termination temp.

[10] NOTE: - - - not an option on this case model.

[11] The recommended location is on the dump line. If using a discharge air temperature to terminate defrost, utilize a 55°F termination temp.

Low Temperature Defrost Schedule

No. Per Day	Hours
1	10 pm
2	6 am - 10 pm**

All measurements are taken per ARI 1200 - 2002 specifications.

NSF COMPONENT

c UL us

HILL PHOENIX EXCELLENCE

A DOVER COMPANY

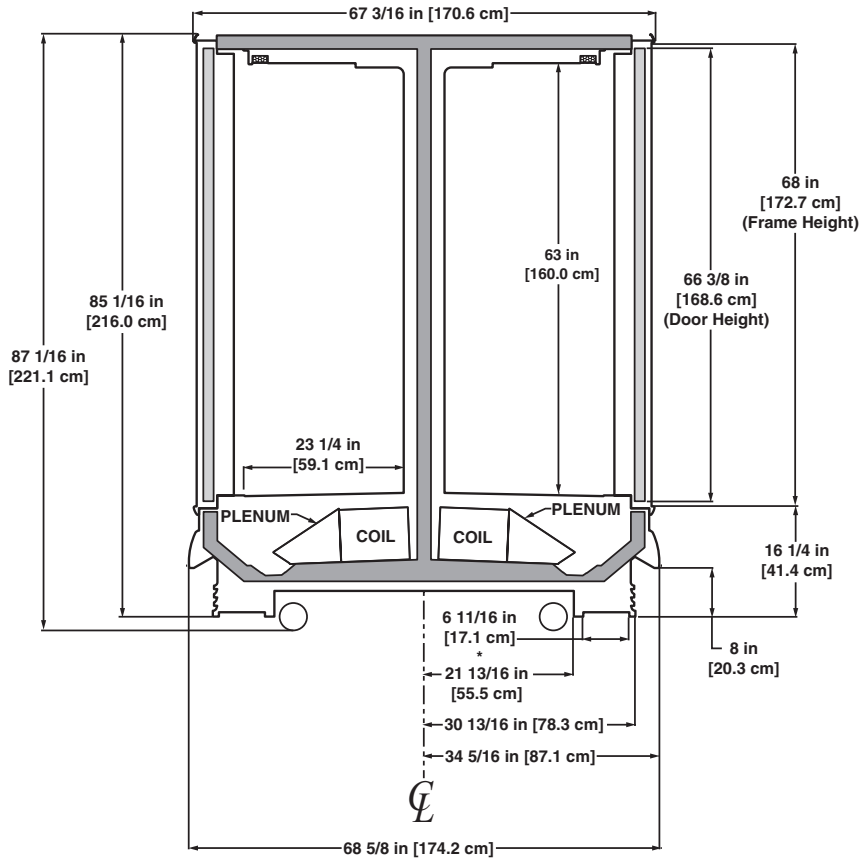

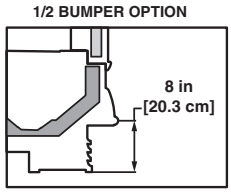

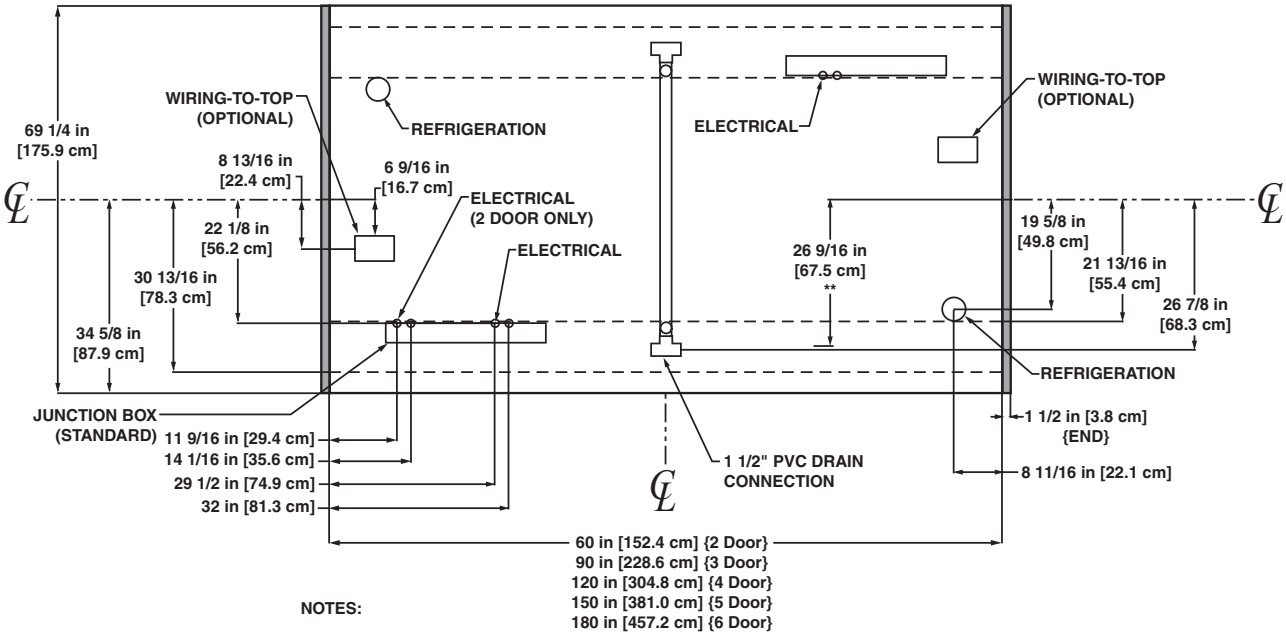

NOTES:

* STUB-UP AREA
** RECOMMENDED STUB-UP CENTERLINE FOR ELECTRICAL AND HUB DRAINS

- ENDS ADD APPROXIMATELY 1 INCH TO CASE HEIGHT
- WIRING-TO-THE-TOP- ADDS APPROXIMATELY 1 INCH TO CASE HEIGHT
- SUCTION LINE (2DR & 3DR) 5/8", SUCTION LINE (4DR, 5DR & 6DR) 7/8"
- LIQUID LINE (ALL LENGTHS) - 3/8", LIQUID LINE w/ HOT GAS DEFROST (ALL LENGTHS) - 1/2"
- AVAILABLE SHELF SIZES: WIRE SHELVES 16", 18", 20" & 22"
  SOLID SHELVES 18", 20" & 22"
  (TOP SHELF MUST BE 20" OR SHORTER. RECOMMENDED CONFIGURATION IS 20" SHELF AND 4 22" SHELVES BELOW TOP SHELF)

NSF COMPONENT c UL us

A DOVER COMPANY

Glass Door Reach-in Back-to-Back Frozen Food/Ice Cream Merchandiser

ORIZ - 2, 3, 4, 5 & 6-door

Electrical Data

Model		Doors per Case	Fans per Case	Standard Fans 120 Volts Amps	Standard Fans 120 Volts Watts	High Efficiency Fans 120 Volts Amps	High Efficiency Fans 120 Volts Watts	Defrost Heaters 208 Volts Amps	Defrost Heaters 208 Volts Watts	Defrost Heaters 240 Volts Amps	Defrost Heaters 240 Volts Watts
ORIZ	2-dr	4	4	2.00	120	0.61	36.8	15.22[1]	5484	17.54[1]	7290
	3-dr	6	6	3.00	180	0.92	55.2	17.18[1]	6192	19.78[1]	8220
	4-dr	8	8	4.00	240	1.22	73.6	22.56[1]	8130	26.16[1]	10878
	5-dr	10	10	5.00	300	1.53	92.0	27.56[1]	9930	31.76[1]	13206
	6-dr	12	12	6.00	360	1.84	110.4	32.56[1]	11730	37.36[1]	15534

[1] Note: 3 phase load. Figure given is maximum amps per phase.

Lighting Data

Model		Fluorescent Lighting 120 Volts Amps	Fluorescent Lighting 120 Volts Watts	LED[2] Lighting 120 Volts Amps	LED[2] Lighting 120 Volts Watts	Total BTUH Credit for LED Lighting BTUH
ORIZ	2-door	3.00	360	1.52	182	607
	3-door	3.80	456	2.28	274	621
	4-door	4.80	576	3.03	364	723
	5-door	5.80	696	3.78	454	826
	6-door	6.80	816	4.56	546	922

[2] LED lighting values based on GE Gelcore LEDs

Anti-Condensate Heater Data

Model		Anthony 101 120 Volts Amps	Anthony 101 120 Volts Watts	Anthony[3] Eliminaator 120 Volts Amps	Anthony[3] Eliminaator 120 Volts Watts	Anthony[3] Eliminaator 2 120 Volts Amps	Anthony[3] Eliminaator 2 120 Volts Watts
ORIZ	2-door	6.82	818	3.50	420	2.42	290
	3-door	9.76	1171	5.18	622	3.56	428
	4-door	12.68	1522	6.76	811	4.60	552
	5-door	15.64	1877	8.48	1018	5.78	694
	6-door	18.62	2234	10.18	1222	6.94	832

[3] Eliminaator values given for doors with no heat on the glass.

Guidelines & Control Settings

Model	BTUH/door[6]	Coil Type	Evaporator (°F)	Superheat Set Point @ Bulb (°F)	Discharge Air (°F)	Return Air (°F)	Discharge Air Velocity[8] (FPM)
ORIZ - F[4]	1162[7]	Enh.	-11	3-5	-3	0	460
ORIZ - C[4]	1234[7]	Enh.	-17	3-5	-8	-5	460
ORIZ - F ELIM[5]	1062[7]	Enh.	-11	3-5	-3	0	460
ORIZ - C ELIM[5]	1079[7]	Enh.	-17	3-5	-8	-5	460

[4] F = Frozen food, C = Ice cream.

[5] Data given for cases with Eliminator Doors.

[6] BTUHs/door listed are for parallel operation. Conventional ratings may be approximated by multiplying listed rating by 1.04. BTUHs are listed per door/per side. These do not include both sides of the case.

[7] High efficiency fans reduce refrigeration load by 96 BTUHs/fan.

[8] Average discharge air velocity at peak of defrost.

Defrost Controls

Model	Defrosts Per Day	Run-Off Time (min)	Electric Defrost Fail-safe (min)	Electric Defrost Termination Temp. (°F)	Timed Off Defrost Fail-safe (min)	Timed Off Defrost Termination Temp. (°F)	Hot Gas Defrost Fail-safe (min)	Hot Gas Defrost Termination Temp. (°F)	Reverse Air Defrost Fail-safe (min)	Reverse Air Defrost Termination Temp. (°F)
ORIZ	1	13 - 15	46	73[9]	- - -[10]	- - -	24	73[11]	- - -	- - -

[9] The recommended location is in the center of the coil on the second pass. If using a discharge air temperature to terminate defrost, utilize a 55°F termination temp.

[10] NOTE: - - - not an option on this case model.

[11] The recommended location is on the dump line. If using a discharge air temperature to terminate defrost, utilize a 55°F termination temp.

Low Temperature Defrost Schedule

No. Per Day	Hours
1	10 pm
2	6 am - 10 pm**

All measurements are taken per ARI 1200 - 2002 specifications.

NSF COMPONENT

c UL us

HILL PHOENIX EXCELLENCE

A DOVER COMPANY

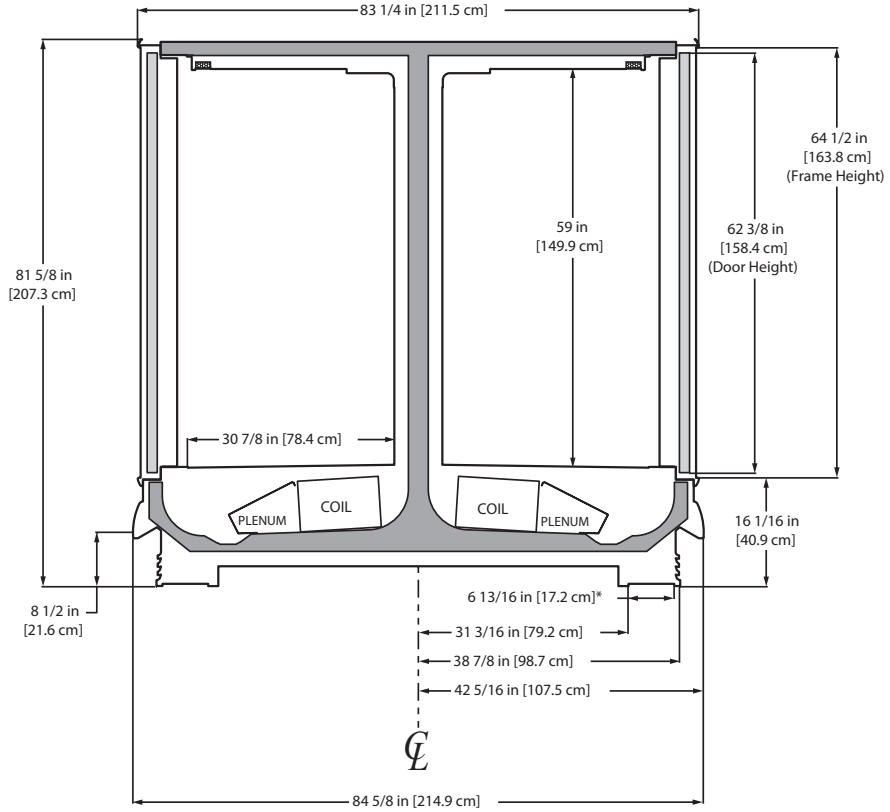

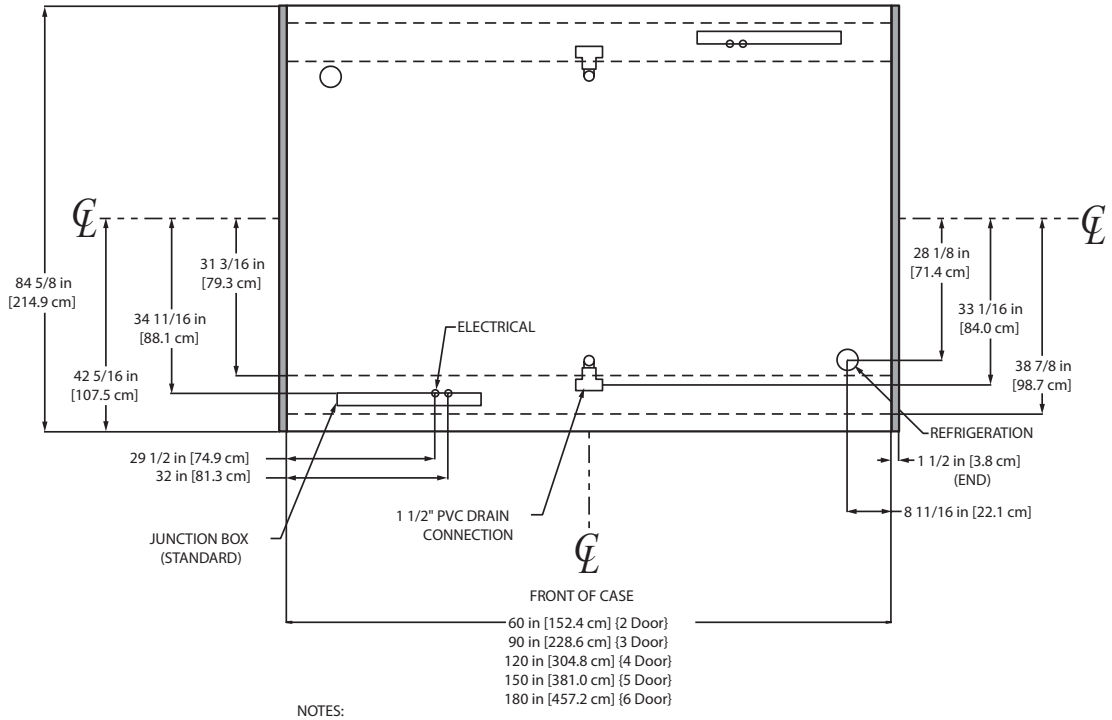

NOTES:

* STUB-UP AREA
** RECOMMENDED STUB-UP CENTERLINE FOR ELECTRICAL AND HUB DRAINS

- ENDS ADD APPROXIMATELY 1 INCH TO CASE HEIGHT
- AVAILABLE SHELF SIZES: WIRE SHELVES 16", 18", 20", 22" & 23 1/2"
  SOLID SHELVES 18", 20", 22", 24" & 27"
  (TOP SHELF MUST BE 24" OR SHORTER WHEN USING 27" SHELVES.
  RECOMMENDED CONFIGURATION IS 1 - 24" SHELF AND 4 - 27" SHELVES BELOW TOP SHELF)

NSF COMPONENT c UL us

A DOVER COMPANY

High Glass Door Reach-in Back-to-Back Frozen Food/Ice Cream Merchandiser

ORIZH - 2, 3, 4, 5 & 6-door

Electrical Data

Model		Doors per Case	Fans per Case	Standard Fans 120 Volts Amps	Standard Fans 120 Volts Watts	High Efficiency Fans 120 Volts Amps	High Efficiency Fans 120 Volts Watts	Defrost Heaters 208 Volts Amps	Defrost Heaters 208 Volts Watts	Defrost Heaters 240 Volts Amps	Defrost Heaters 240 Volts Watts
ORIZH	2-dr	4	4	2.00	120	0.61	36.8	15.22[1]	5484	17.54[1]	7290
	3-dr	6	6	3.00	180	0.92	55.2	17.18[1]	6192	19.78[1]	8220
	4-dr	8	8	4.00	240	1.22	73.6	22.56[1]	8130	26.16[1]	10878
	5-dr	10	10	5.00	300	1.53	92.0	27.56[1]	9930	31.76[1]	13206
	6-dr	12	12	6.00	360	1.84	110.4	32.56[1]	11730	37.36[1]	15534

[1] Note: 3 phase load. Figure given is maximum amps per phase.

Lighting Data

Model		Fluorescent Lighting 120 Volts Amps	Fluorescent Lighting 120 Volts Watts	LED[2] Lighting 120 Volts Amps	LED[2] Lighting 120 Volts Watts	Total BTUH Credit for LED Lighting BTUH
ORIZH	2-door	3.00	360	1.52	182	607
	3-door	3.80	456	2.28	274	621
	4-door	4.80	576	3.03	364	723
	5-door	5.80	696	3.78	454	826
	6-door	6.80	816	4.56	546	922

[2] LED lighting values based on GE Gelcore LEDs

Anti-Condensate Heater Data

Model		Anthony 101 120 Volts Amps	Anthony 101 120 Volts Watts	Anthony[3] Eliminaator 120 Volts Amps	Anthony[3] Eliminaator 120 Volts Watts	Anthony[3] Eliminaator 2 120 Volts Amps	Anthony[3] Eliminaator 2 120 Volts Watts
ORIZH	2-door	6.88	826	3.56	427	2.48	298
	3-door	10.00	1200	5.24	629	3.62	434
	4-door	12.84	1541	6.90	828	4.74	568
	5-door	15.90	1908	8.66	1039	5.96	716
	6-door	18.98	2278	10.34	1240	7.12	854

[3] Eliminaator values given for doors with no heat on the glass.

Guidelines & Control Settings

Model	BTUH/door[6]	Coil Type	Evaporator (°F)	Superheat Set Point @ Bulb (°F)	Discharge Air (°F)	Return Air (°F)	Discharge Air Velocity[8] (FPM)
ORIZH - F[4]	1162[7]	Enh.	-11	3-5	-3	0	460
ORIZH - C[4]	1234[7]	Enh.	-17	3-5	-8	-5	460
ORIZH - F ELIM[5]	1062[7]	Enh.	-11	3-5	-3	0	460
ORIZH - C ELIM[5]	1079[7]	Enh.	-17	3-5	-8	-5	460

[4] F = Frozen food, C = Ice cream.

[5] Data given for cases with Eliminator Doors.

[6] BTUHs/door listed are for parallel operation. Conventional ratings may be approximated by multiplying listed rating by 1.04. BTUHs are listed per door/per side. These do not include both sides of the case.

[7] High efficiency fans reduce refrigeration load by 96 BTUHs/fan.

[8] Average discharge air velocity at peak of defrost.

Defrost Controls

Model	Defrosts Per Day	Run-Off Time (min)	Electric Defrost Fail-safe (min)	Electric Defrost Termination Temp. (°F)	Timed Off Defrost Fail-safe (min)	Timed Off Defrost Termination Temp. (°F)	Hot Gas Defrost Fail-safe (min)	Hot Gas Defrost Termination Temp. (°F)	Reverse Air Defrost Fail-safe (min)	Reverse Air Defrost Termination Temp. (°F)
ORIZH	1	13 - 15	46	73[9]	- - -[10]	- - -	24	73[11]	- - -	- - -

[9] The recommended location is in the center of the coil on the second pass. If using a discharge air temperature to terminate defrost, utilize a 55°F termination temp.

[10] NOTE: - - - not an option on this case model.

[11] The recommended location is on the dump line. If using a discharge air temperature to terminate defrost, utilize a 55°F termination temp.

Low Temperature Defrost Schedule

No. Per Day	Hours
1	10 pm
2	6 am - 10 pm**

All measurements are taken per ARI 1200 - 2002 specifications.

NSF COMPONENT

c UL us

HILL PHOENIX EXCELLENCE

A DOVER COMPANY

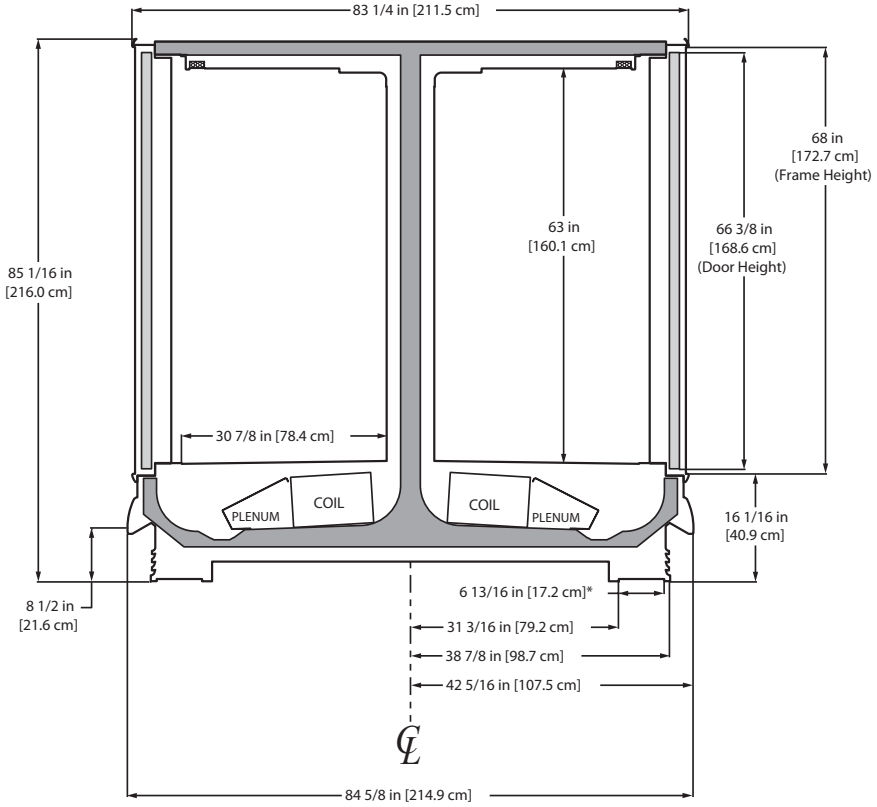

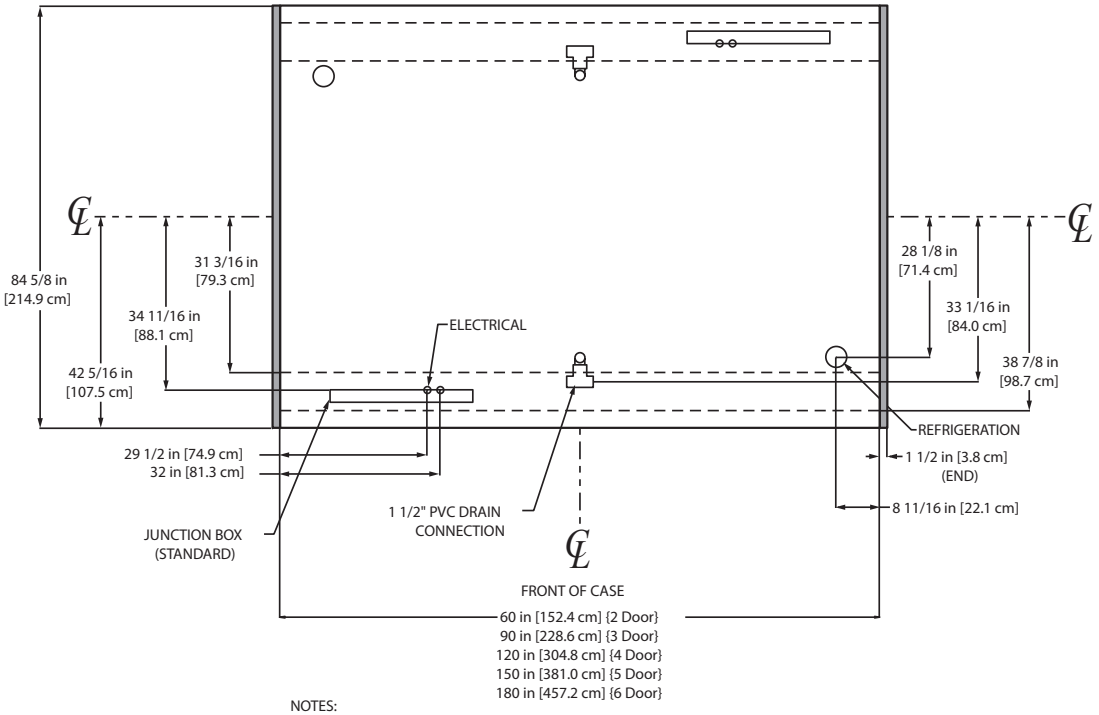

NOTES:

* STUB-UP AREA
** RECOMMENDED STUB-UP CENTERLINE FOR ELECTRICAL AND HUB DRAINS

- ENDS ADD APPROXIMATELY 1 INCH TO CASE HEIGHT
- AVAILABLE SHELF SIZES: WIRE SHELVES 16", 18", 20", 22" & 23 1/2"
  SOLID SHELVES 18", 20", 22", 24" & 27"
  (TOP SHELF MUST BE 24" OR SHORTER WHEN USING 27" SHELVES.
  RECOMMENDED CONFIGURATION IS 1 - 24" SHELF AND 4 - 27" SHELVES BELOW TOP SHELF)

Glass Door Reach-in Beverage Merchandiser

RBH - 8′ & 12′

Electrical Data

Model		Fans per Case	Standard Fan 120 Volts Amps	Standard Fan 120 Volts Watts	High Efficiency Fans 120 Volts Amps	High Efficiency Fans 120 Volts Watts	Anti-Condensate Heaters 120 Volts Amps	Anti-Condensate Heaters 120 Volts Watts	Defrost Heaters 208 Volts Amps	Defrost Heaters 208 Volts Watts	Defrost Heaters 240 Volts Amps	Defrost Heaters 240 Volts Watts
RBH	8′	2	- - -[1]	- - -	0.31	18.4	1.61	193	3.85	800	4.44	1065
	12′	3	- - -	- - -	0.46	27.6	2.26	271	5.78	1200	6.67	1600

[1] NOTE: - - - not an option on this case model.

Lighting Data

Model		Fluorescent Lighting 120 Volts Amps	Fluorescent Lighting 120 Volts Watts
RBH	8′	2.50	300
	12′	3.13	376

Guidelines & Control Settings

Model	BTUH/door[3]	Coil Type	Evaporator (°F)	Superheat Set Point @ Bulb (°F)	Discharge Air (°F)	Return Air (°F)	Discharge Air Velocity[4] (FPM)
RBH[2]	1059	Enh.	34	6-8	38	40	550

[2] RBH-8′ has 3 doors, RBH-12′ has 4 doors..

[3] BTUHs/door listed are for parallel operation. Conventional ratings may be approximated by multiplying listed rating by 1.04.

[4] Average discharge air velocity at peak of defrost.

Defrost Controls

Model	Defrosts Per Day	Run-Off Time (min)	Electric Defrost Fail-safe (min)	Electric Defrost Termination Temp. (°F)	Timed Off Defrost Fail-safe (min)	Timed Off Defrost Termination Temp. (°F)	Hot Gas Defrost Fail-safe (min)	Hot Gas Defrost Termination Temp. (°F)	Reverse Air Defrost Fail-safe (min)	Reverse Air Defrost Termination Temp. (°F)
RBH	4[5]	6 - 8	30	47	30	40	24	47	- - -	- - -

[5] If timed off defrost is utilized. If electric or hot gas defrost is utilized case only requires 1 defrot per day.

Low Temperature Defrost Schedule

No. Per Day	Hours
1	10 pm
2	6 am - 10 pm**

All measurements are taken per ARI 1200 - 2002 specifications.

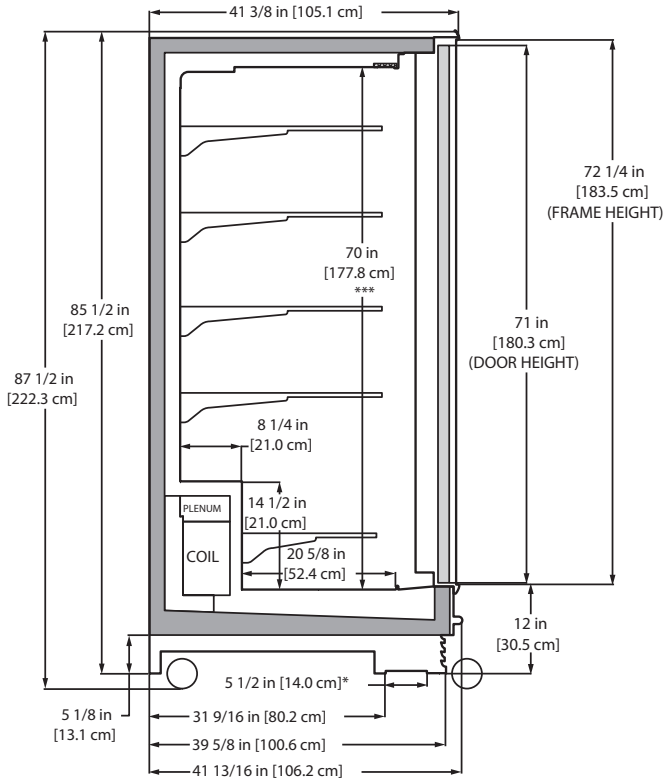

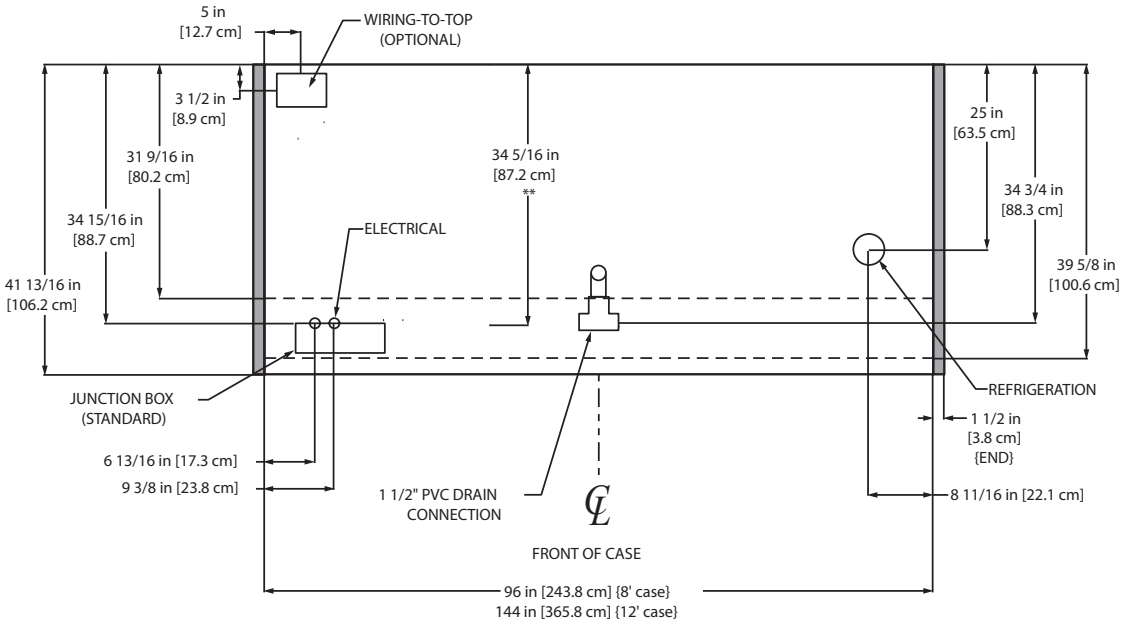

NOTES:

* STUB-UP AREA
** RECOMMENDED STUB-UP CENTERLINE FOR ELECTRICAL AND HUB DRAINS
*** CASE-TO-CASE PIPING REDUCES THE INTERIOR DIMENSION TO 68"

- ENDS ADD APPROXIMATELY 1 INCH TO CASE HEIGHT
- WIRING-TO-THE-TOP- ADDS APPROXIMATELY 1 INCH TO CASE HEIGHT
- A 2" MINIMUM AIR GAP IS REQUIRED BETWEEN THE REAR OF THE CASE AND A WALL
- SUCTION LINE (ALL LENGTHS) 1/2"
- LIQUID LINE (ALL LENGTHS) - 3/8", LIQUID LINE w/ HOT GAS DEFROST (ALL LENGTHS) - 1/2"
- AVAILABLE SHELF SIZES: WIRE SHELVES 16", 18", 20", 22" & 23 1/2"
  SOLID SHELVES 18", 20", 22", 24" & 27"
  (RECOMMENDED CONFIGURATION IS 4 - 27" SHELVES AND 1 - 18" SHELF AT THE BOTTOM OF THE CASE)

Glass Door Reach-in Frozen Food/Ice Cream Merchandiser

RZH - 2, 3, 4, & 5-door

Electrical Data

Model		Fans per Case	High Efficiency Fans		Defrost Heaters Hot Gas Defrost		Defrost Heaters Electric Defrost			
			120 Volts		120 Volts		208 Volts		240 Volts	
			Amps	Watts	Amps	Watts	Amps	Watts	Amps	Watts
RZH	2-door	2	0.47	28	2.11	253	9.80	2038	11.29	2710
	3-door	3	0.70	42	3.64	437	11.80	2455	13.58	3260
	4-door	4	0.93	56	5.00	600	15.61	3246	18.08	4340
	5-door	5	1.17	70	6.67	800	19.35	4025	22.31	5354

Lighting Data

Model		Fluorescent Lighting	
		120 Volts	
		Amps	Watts
RZH	2-door	1.88	226
	3-door	2.50	300
	4-door	3.13	376
	5-door	3.75	450

Anti-Condensate Heater Data

Model		Anthony 101		Anthony[1] Eliminaator		Anthony[1] Eliminaator 2	
		120 Volts		120 Volts		120 Volts	
		Amps	Watts	Amps	Watts	Amps	Watts
RZH	2-door	4.40	528	1.86	223	1.28	154
	3-door	6.15	738	2.76	331	1.89	227
	4-door	7.98	958	3.62	434	2.46	295
	5-door	9.90	1188	4.56	547	3.11	373

[1] Eliminaator values given for doors with no heat on the glass.

Guidelines & Control Settings

Model	BTUH/door[4]	Coil Type	Evaporator (°F)	Superheat Set Point @ Bulb (°F)	Discharge Air (°F)	Return Air (°F)	Discharge Air Velocity[5] (FPM)
RZH - F[2]	1530	Enh.	-11	3-5	-4	3	550
RZH - C[2]	1630	Enh.	-17	3-5	-10	-3	550
RZH - F ELIM[3]	1354	Enh.	-11	3-5	-4	3	550
RZH - C ELIM[3]	1454	Enh.	-17	3-5	-10	-3	550

[2] F = Frozen food, C = Ice cream.

[3] Data given for cases with Eliminator Doors.

[4] BTUHs/door listed are for parallel operation. Conventional ratings may be approximated by multiplying listed rating by 1.04.

[5] Average discharge air velocity at peak of defrost.

Defrost Controls

Model	Defrosts Per Day	Run-Off Time (min)	Electric Defrost		Timed Off Defrost		Hot Gas Defrost		Reverse Air Defrost	
			Fail-safe (min)	Termination Temp. (°F)	Fail-safe (min)	Termination Temp. (°F)	Fail-safe (min)	Termination Temp. (°F)	Fail-safe (min)	Termination Temp. (°F)
RZH	1	13 - 15	52	48[6]	- - -	- - -	24	73[7]	- - -	- - -

[6] The recommended location is on the left end of the coil on the top crossover.

[7] The recommended location is on the dump line.

Low Temperature Defrost Schedule

No. Per Day	Hours
1	10 pm
2	6 am - 10 pm**

All measurements are taken per ARI 1200 - 2002 specifications.

NSF COMPONENT

c UL us

HILL PHOENIX EXCELLENCE

A DOVER COMPANY

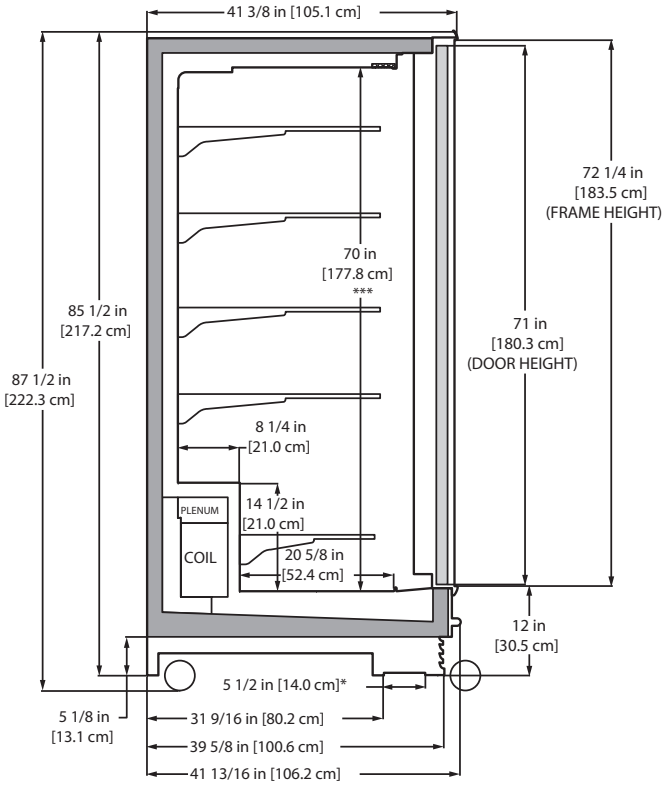

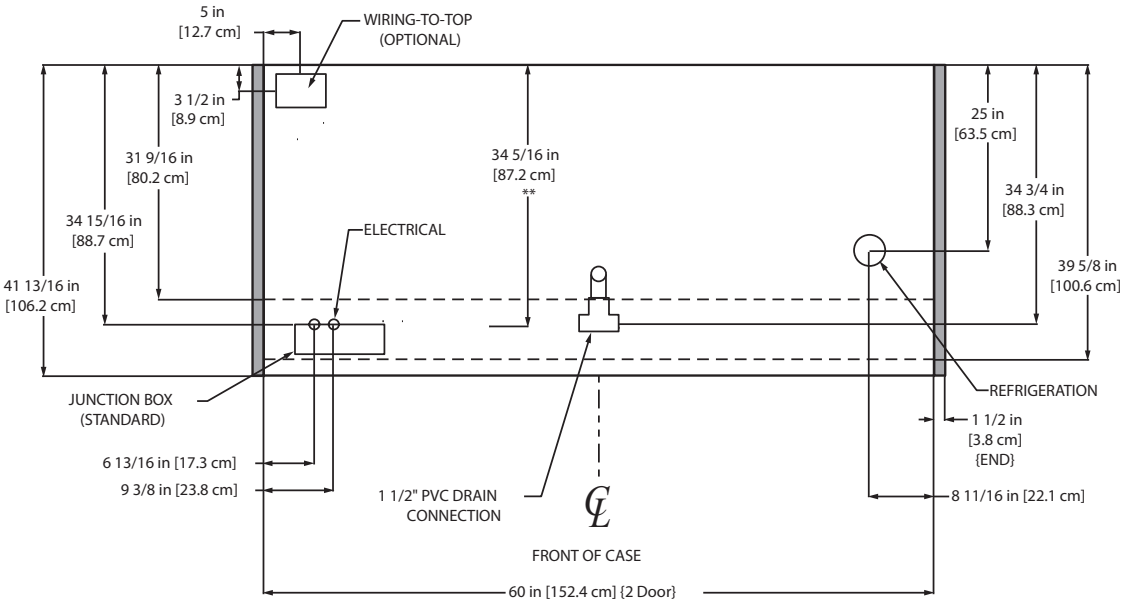

NOTES:

* STUB-UP AREA
** RECOMMENDED STUB-UP CENTERLINE FOR ELECTRICAL AND HUB DRAINS
*** CASE-TO-CASE PIPING REDUCES THE INTERIOR DIMENSION TO 68"

- ENDS ADD APPROXIMATELY 1 INCH TO CASE HEIGHT
- WIRING-TO-THE-TOP- ADDS APPROXIMATELY 1 INCH TO CASE HEIGHT
- A 2" MINIMUM AIR GAP IS REQUIRED BETWEEN THE REAR OF THE CASE AND A WALL
- SUCTION LINE (2DR & 3DR) 5/8", SUCTION LINE (4DR & 5DR) 7/8"
- LIQUID LINE (ALL LENGTHS) - 3/8", LIQUID LINE w/ HOT GAS DEFROST (ALL LENGTHS) - 1/2"
- AVAILABLE SHELF SIZES: WIRE SHELVES 16", 18", 20", 22" & 23 1/2"
  SOLID SHELVES 18", 20", 22", 24" & 27"
  (RECOMMENDED CONFIGURATION IS 4 - 27" SHELVES AND 1 - 18" SHELF AT THE BOTTOM OF THE CASE)

Glass Door Reach-in Back-to-Back Frozen Food/Ice Cream Merchandiser

RIZH - 2, 3, 4, & 5-door

Electrical Data

Model		Doors per Case	Fans per Case	High Efficiency Fans		Defrost Heaters Hot Gas Defrost		Defrost Heaters Electric Defrost			
				120 Volts		120 Volts		208 Volts		240 Volts	
				Amps	Watts	Amps	Watts	Amps	Watts	Amps	Watts
RIZH	2-door	4	2	0.94	56	4.22	506	19.60	4076	22.58	5420
	3-door	6	3	1.40	84	7.28	874	23.60	4910	27.16	6520
	4-door	8	4	1.86	112	10.00	1200	31.22	6492	36.16	8680
	5-door	10	5	2.34	140	13.33	1600	38.70	8050	44.62	10708

Lighting Data

Model		Fluorescent Lighting	
		120 Volts	
		Amps	Watts
RIZH	2-door	3.76	452
	3-door	5.00	600
	4-door	6.26	752
	5-door	7.50	900

Anti-Condensate Heater Data

Model		Anthony 101		Anthony[1] Eliminaator		Anthony[1] Eliminaator 2	
		120 Volts		120 Volts		120 Volts	
		Amps	Watts	Amps	Watts	Amps	Watts
RIZH	2-door	8.80	1056	3.72	446	2.56	308
	3-door	12.30	1476	5.52	662	3.78	454
	4-door	15.96	1916	7.24	868	4.92	590
	5-door	19.80	2376	9.12	1094	6.22	746

[1] Eliminaator values given for doors with no heat on the glass.

Guidelines & Control Settings

Model	BTUH/door[4]	Coil Type	Evaporator (°F)	Superheat Set Point @ Bulb (°F)	Discharge Air (°F)	Return Air (°F)	Discharge Air Velocity[5] (FPM)
RIZH - F[2]	1377	Enh.	-11	3-5	-4	3	550
RIZH - C[2]	1467	Enh.	-17	3-5	-10	-3	550
RIZH - F ELIM[3]	1219	Enh.	-11	3-5	-4	3	550
RIZH - C ELIM[3]	1309	Enh.	-17	3-5	-10	-3	550

[2] F = Frozen food, C = Ice cream.

[3] Data given for cases with Eliminator Doors.

[4] BTUHs/door listed are for parallel operation. Conventional ratings may be approximated by multiplying listed rating by 1.04.

[5] Average discharge air velocity at peak of defrost.

Defrost Controls

Model	Defrosts Per Day	Run-Off Time (min)	Electric Defrost		Timed Off Defrost		Hot Gas Defrost		Reverse Air Defrost	
			Fail-safe (min)	Termination Temp. (°F)	Fail-safe (min)	Termination Temp. (°F)	Fail-safe (min)	Termination Temp. (°F)	Fail-safe (min)	Termination Temp. (°F)
RIZH	1	13 - 15	60	73[6]	- - -	- - -	24	73[7]	- - -	- - -

[6] The recommended location is in the center of the coil on the second pass.

[7] The recommended location is on the dump line.

Low Temperature Defrost Schedule

No. Per Day	Hours
1	10 pm
2	6 am - 10 pm**

All measurements are taken per ARI 1200 - 2002 specifications.

NSF COMPONENT

c UL us

HILL PHOENIX EXCELLENCE

A DOVER COMPANY

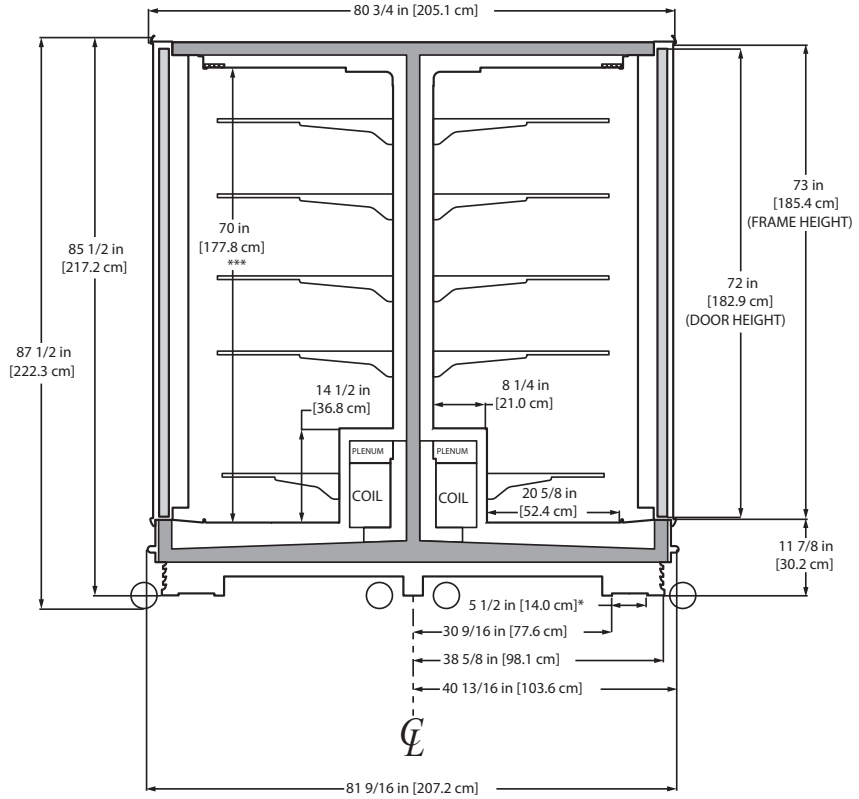

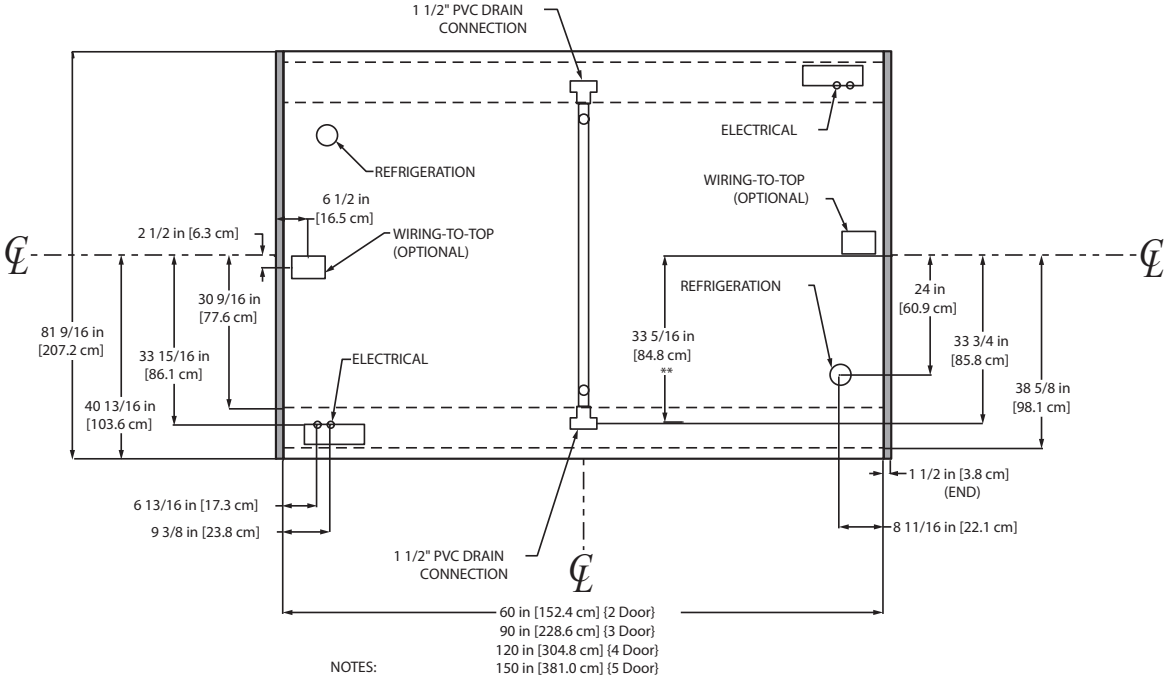

NOTES:

* STUB-UP AREA
** RECOMMENDED STUB-UP CENTERLINE FOR ELECTRICAL AND HUB DRAINS
*** CASE-TO-CASE PIPING REDUCES THE INTERIOR DIMENSION TO 68"

- ENDS ADD APPROXIMATELY 1 INCH TO CASE HEIGHT
- WIRING-TO-THE-TOP- ADDS APPROXIMATELY 1 INCH TO CASE HEIGHT
- A 2" MINIMUM AIR GAP IS REQUIRED BETWEEN THE REAR OF THE CASE AND A WALL
- SUCTION LINE (2DR & 3DR) 5/8", SUCTION LINE (4DR & 5DR) 7/8"
- LIQUID LINE (ALL LENGTHS) - 3/8", LIQUID LINE w/ HOT GAS DEFROST (ALL LENGTHS) - 1/2"
- AVAILABLE SHELF SIZES: WIRE SHELVES 16", 18", 20", 22" & 23 1/2"
  SOLID SHELVES 18", 20", 22", 24" & 27"
  (RECOMMENDED CONFIGURATION IS 4 - 27" SHELVES AND 1 - 18" SHELF AT THE BOTTOM OF THE CASE)

SINGLE DECK ISLAND

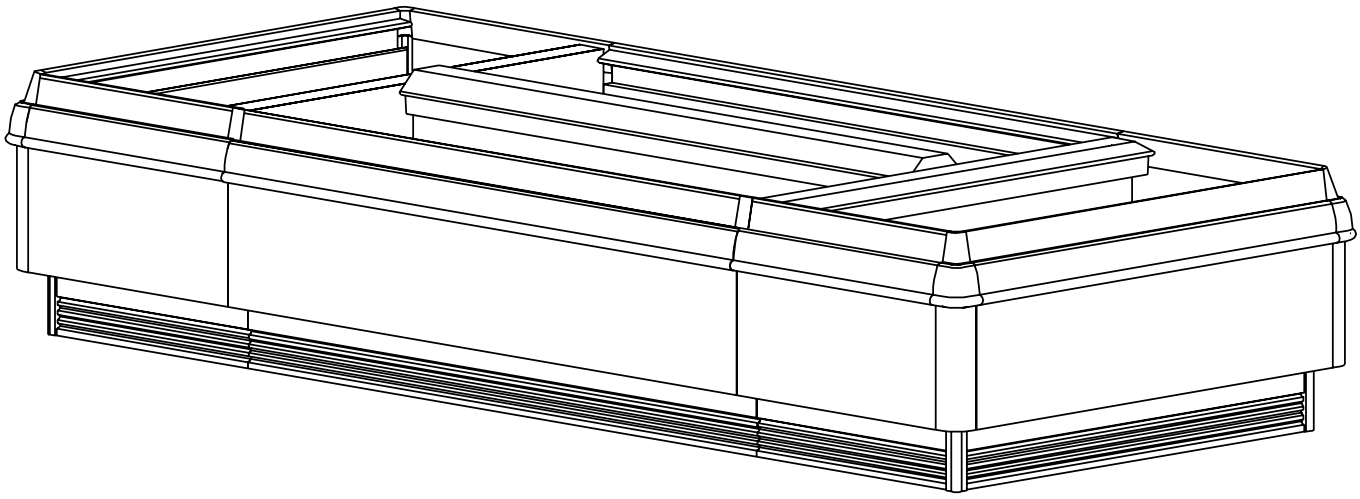

Notes:

- **Cases comply with ANSI / NSF* Standard 7. Units marked as components require remote refrigeration.**
- **Allow for an extra 1/8" per joint when lining up merchandisers.**
- **Front sill height does not affect case performance unless specifically shown.**
- **Front and rear sill heights vary with baseframe height.**

* ANSI - American National Standard Institute
NSF - National Sanitation Foundation

Narrow Island Deli/Meat Merchandiser

ONIM - 8′ & 12′ double wraparound ends
ONIMB - 8′ & 12′ single wraparound end

Electrical Data

Model		Fans per Case	Standard Fans 120 Volts Amps	Standard Fans 120 Volts Watts	High Efficiency Fans 120 Volts Amps	High Efficiency Fans 120 Volts Watts	Anti-Condensate Heaters 120 Volts Amps	Anti-Condensate Heaters 120 Volts Watts	Defrost Heaters 208 Volts Amps	Defrost Heaters 208 Volts Watts	Defrost Heaters 240 Volts Amps	Defrost Heaters 240 Volts Watts
ONIM	8′	6	2.04	102	0.90	66	0.82	98	4.34	902	5.00	1200
	12′	8	2.72	136	1.20	88	1.08	130	7.22	1502	8.33	2000
ONIMB	8′	6	2.04	102	0.90	66	0.75	90	4.34	902	5.00	1200
	12	8	2.72	136	1.20	88	1.17	140	7.22	1502	8.33	2000

Lighting Data

Model		Typical per Light Row 120 Volts Amps	Typical per Light Row 120 Volts Watts	Maximum Lighting 120 Volts Amps	Maximum Lighting 120 Volts Watts
ONIM	8′	NA[1]	NA	1.26	151
	12′	NA	NA	1.46	175
ONIMB	8′	NA	NA	1.26	151
	12′	NA	NA	1.46	175

[1] Not applicable.

Guidelines & Control Settings

Model	BTUH/ft[2]	Evaporator (°F)	Superheat Set Point @ Bulb (°F)	Discharge Air (°F)	Return Air (°F)	Discharge Air Velocity[3] (FPM)
ONIM/ONIMB Meat	885[4]	12	6-8	25	34	180
ONIM/ONIMB Deli	860[5]	17	6-8	28	37	180

[2] BTUHs/ft listed are for parallel operation. Conventional ratings may be approximated by multiplying listed rating by 1.04.

[3] Average discharge air velocity at peak of defrost.

[4] ONIM (meat): +400 BTUH per wraparound end.

[5] ONIM (deli): +250 BTUH per wraparound end.

Defrost Controls

Model	Defrosts Per Day	Run-Off Time (min)	Electric Defrost Fail-safe (min)	Electric Defrost Termination Temp. (°F)	Timed Off Defrost Fail-safe (min)	Timed Off Defrost Termination Temp. (°F)	Hot Gas Defrost Fail-safe (min)	Hot Gas Defrost Termination Temp. (°F)	Reverse Air Defrost Fail-safe (min)	Reverse Air Defrost Termination Temp. (°F)
ONIM/ONIMB	3	6 - 8	35	47	45	47	26	45	- - -[6]	- - -

[6] NOTE: - - - not an option on this case model.

Medium Temperature Defrost Schedule

No. Per Day	Hours
1	12 midnight
2	12 am - 12 pm
3	6 am - 2 pm - 10 pm
4	12 - 6 am - 12 - 6 pm

All measurements are taken per ARI 1200 - 2002 specifications.

NSF COMPONENT

c UL us

Hill PHOENIX EXCELLENCE

A DOVER COMPANY

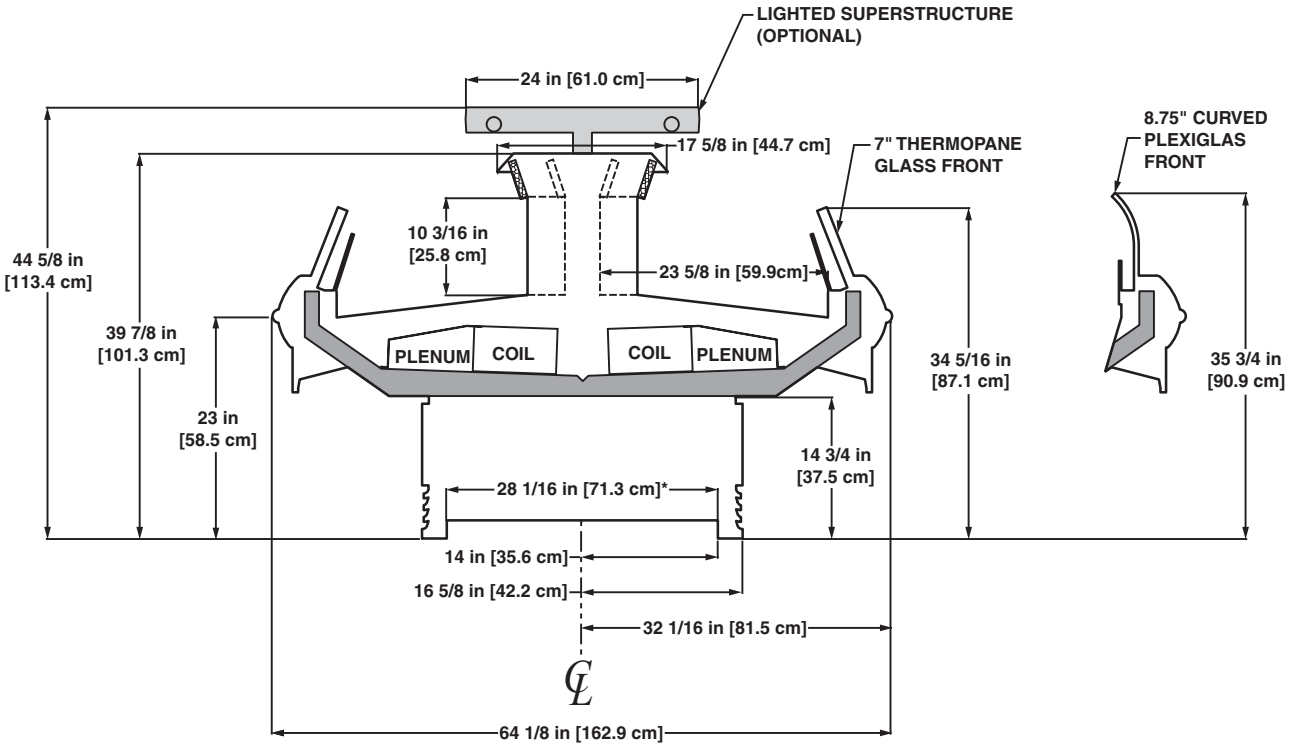

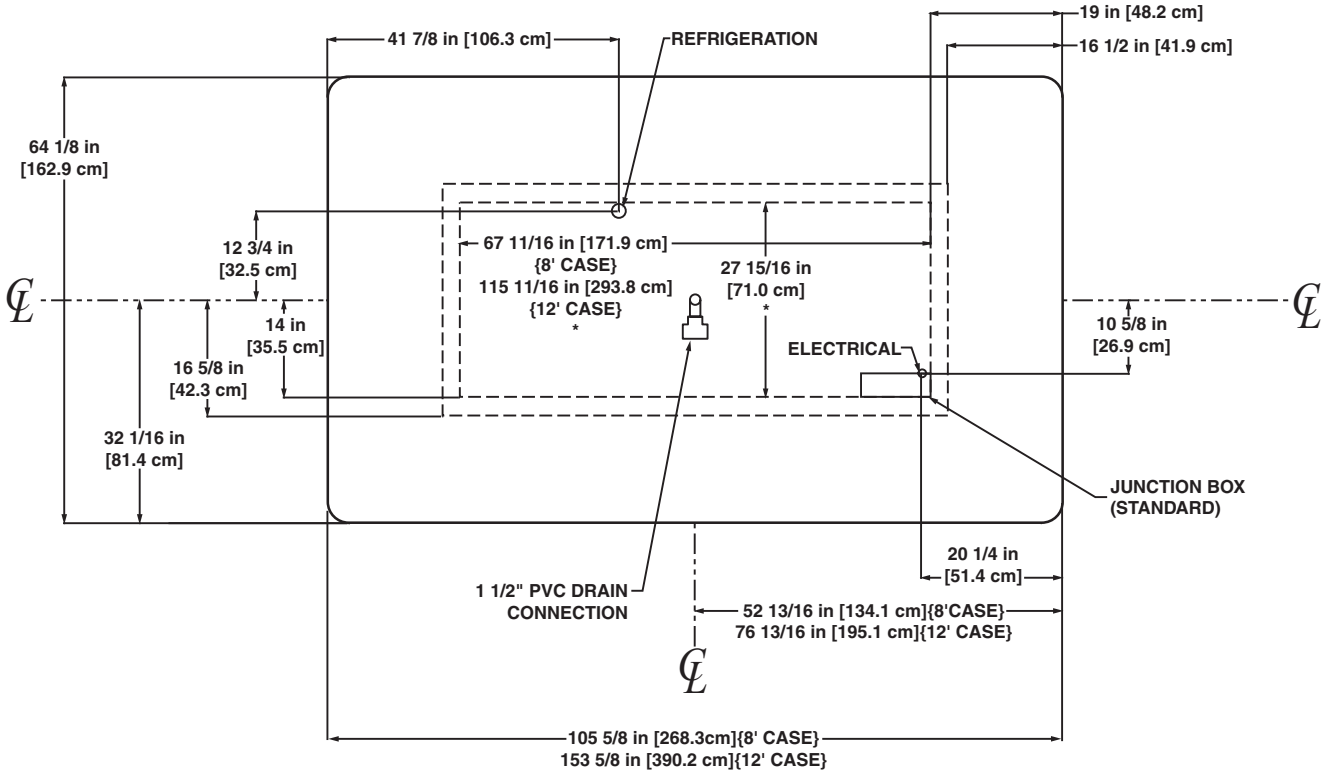

NOTES:

* STUB-UP AREA

• SUCTION LINE - 7/8", LIQUID LINE - 3/8"

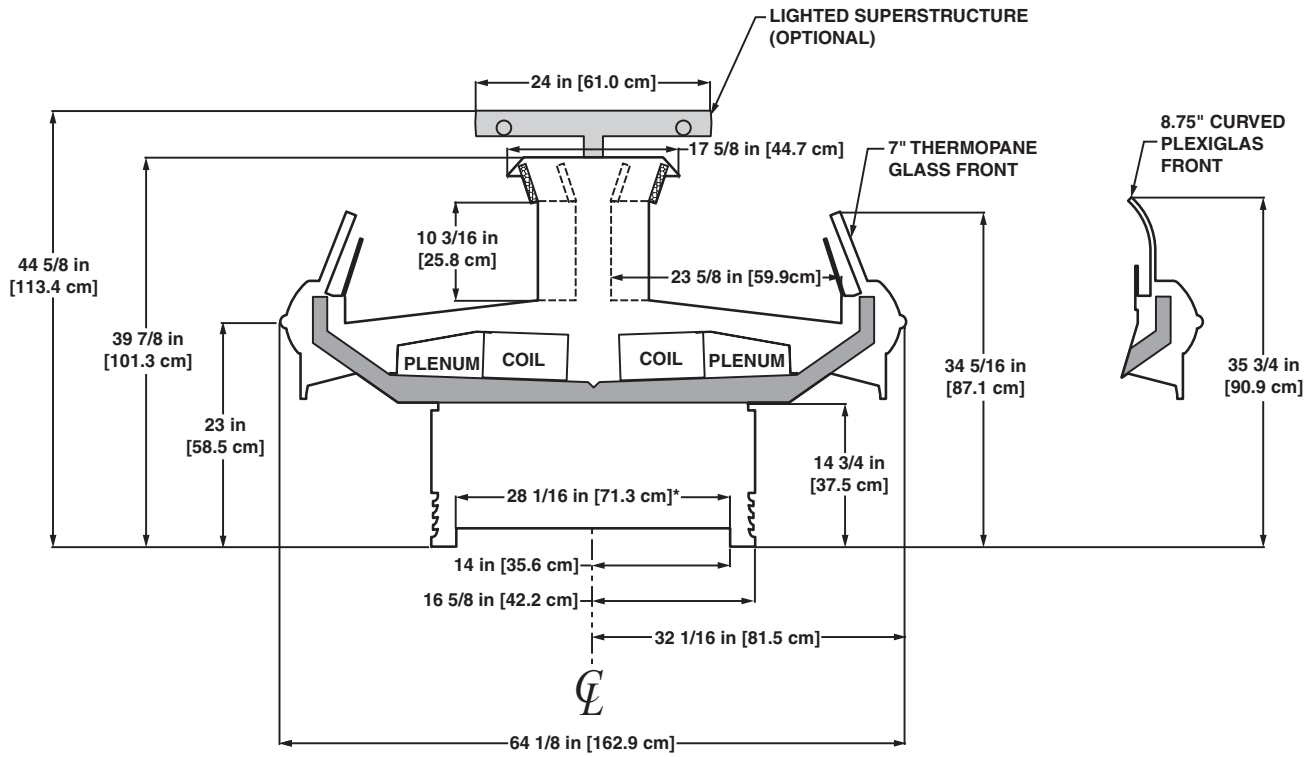

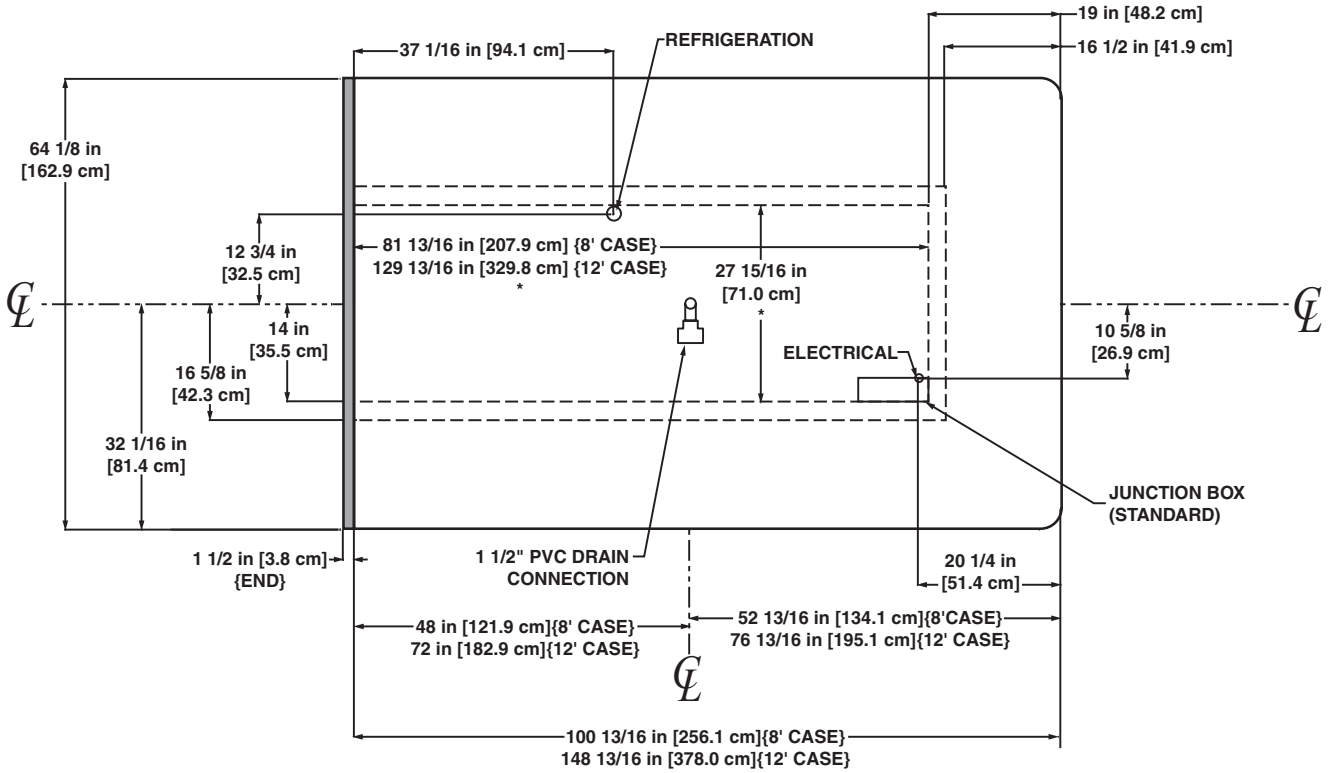

NOTES:

* STUB-UP AREA

• SUCTION LINE - 7/8", LIQUID LINE - 3/8"

Narrow Island Self-Contained Deli/Meat Merchandiser

ONIMA - 8′ & 12′

System Requirements

Model		Volts	Phase	Hz	Wire	Minimum Circuit Ampacity	Maximum Overcurrent Protection
ONIMA	8′	208	1	60	3 wire + ground	19.325	35
	12′	208	1	60	3 wire + ground	23.343	40

Electrical Data

Model		Fans per Case	Standard Fans		Condenser Fans		Anti-Condensate Heaters		Defrost Heaters				Drain Heater		Maximum Lights	
			120 Volts		208 Volts		120 Volts		208 Volts		240 Volts		208 Volts		120 Volts	
			Amps	Watts	Amps	Watts	Amps	Watts	Amps	Watts	Amps	Watts	Amps	Watts	Amps	Watts
ONIMA	8′	6	2.04	102	0.85	88	0.82	98	4.34	902	5.00	1200	4.81		1.26	151
	12′	8	2.72	136	2.60	270	1.08	130	7.22	1502	8.33	2000	4.81		1.46	175

Guidelines & Control Settings

Model	24 hr Energy Usage (kWh)	Suction Pressure @ Case Outlet (psig)	Superheat Set Point @ Bulb (°F)	Discharge Air (°F)	Return Air (°F)	Discharge Air Velocity[1] (FPM)
ONIMA-8′		35	6-8	25	34	180
ONIMA-12′		35	6-8	25	34	180

[1] Average discharge air velocity at peak of defrost.

Condensing Unit Data

Model	Volts	Phase	Frequency (Hz)	HP	RLA[3] (amps)	LRA[4] (amps)	Refrig.	lbs of Refrig.
ONIMA-8′	208	1	60	1	10.36	48.2	R22	8.2
ONIMA-12′[2]	208	1	60	1	7.0	34.2	R22	12.6

[2] This case uses two of the condensing units listed above.

[3] RLA - Running Load Amps.

[4] LRA - Locked Rotor Amps.

Defrost Controls

Model	Defrosts Per Day	Electric Defrost		Timed Off Defrost		Hot Gas Defrost		Reverse Air Defrost	
		Fail-safe (min)	Termination Temp. (°F)	Fail-safe (min)	Termination Temp. (°F)	Fail-safe (min)	Termination Temp. (°F)	Fail-safe (min)	Termination Temp. (°F)
ONIMA	3	35	47	- - -[5]	- - -	- - -	- - -	- - -	- - -

[5] NOTE: - - - not an option on this case model.

Medium Temperature Defrost Schedule

No. Per Day	Hours
1	12 midnight
2	12 am - 12 pm
3	6 am - 2 pm - 10 pm
4	12 - 6 am - 12 - 6 pm

All measurements are taken per ARI 1200 - 2002 specifications.

Hill PHOENIX EXCELLENCE

A DOVER COMPANY

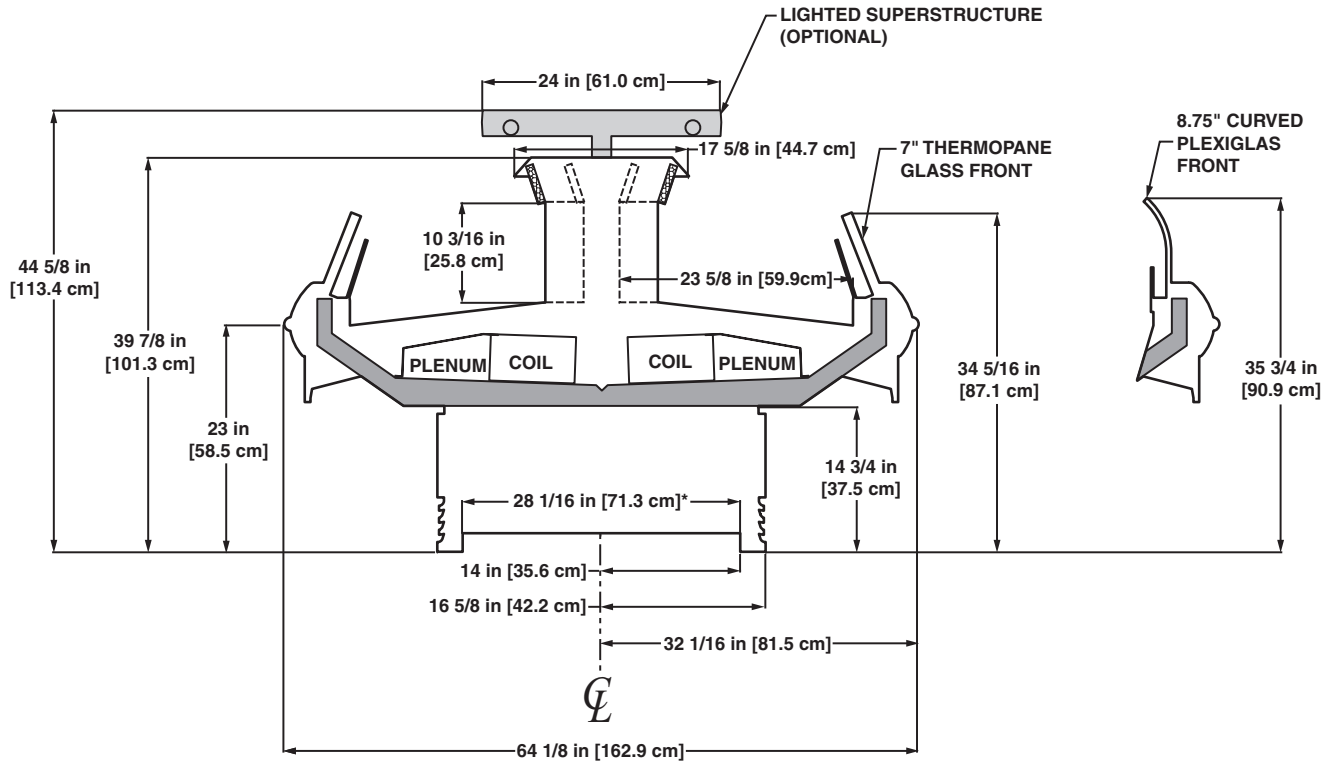

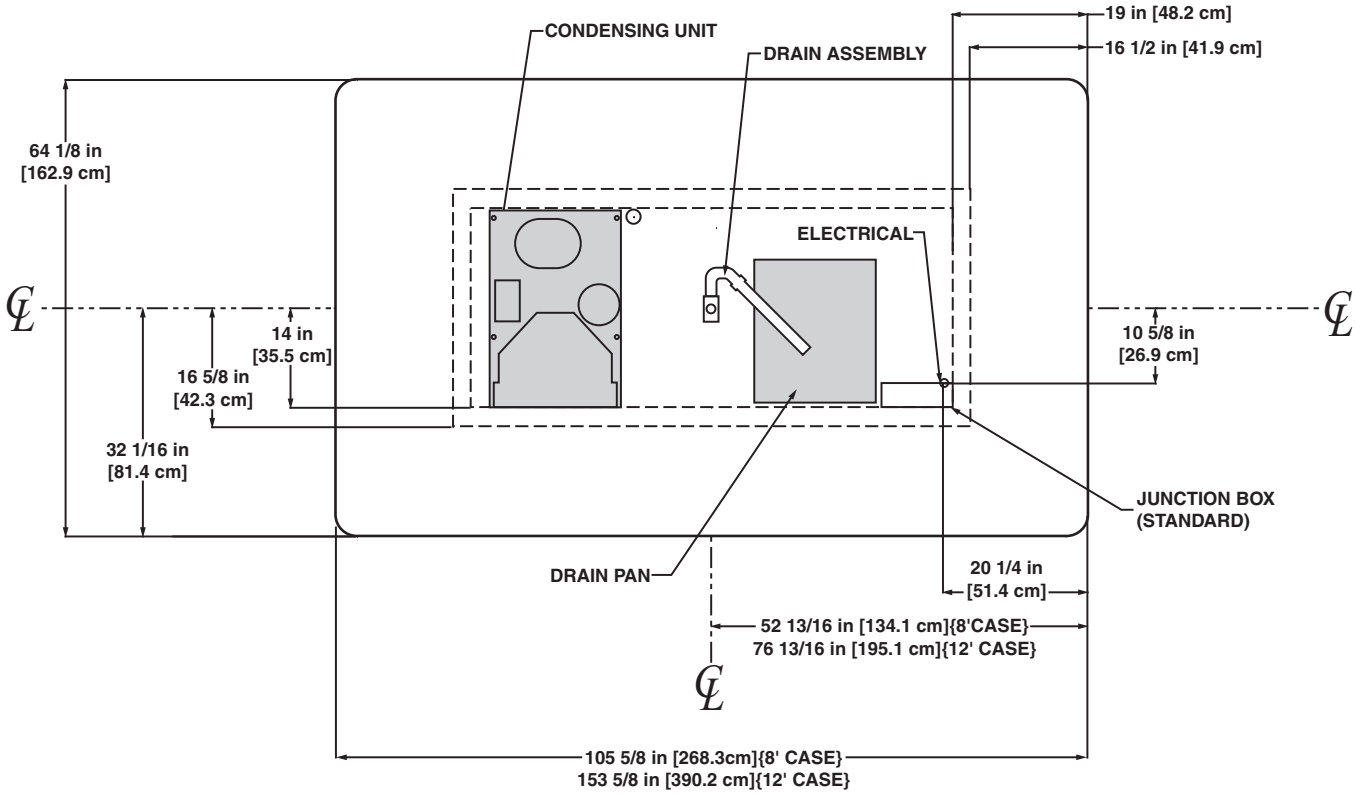

NOTES:

* STUB-UP AREA

Narrow Island Self-Contained Deli/Meat Merchandiser

ONIMBA - 8′ & 12′

System Requirements

Model		Volts	Phase	Hz	Wire	Minimum Circuit Ampacity	Maximum Overcurrent Protection
ONIMBA	8′	208	1	60	3 wire + ground	17.999	35
	12′	208	1	60	3 wire + ground	26.619	45

Electrical Data

Model		Fans per Case	Standard Fans		Condenser Fans		Anti-Condensate Heaters		Defrost Heaters				Drain Heater		Maximum Lights	
			120 Volts		208 Volts		120 Volts		208 Volts		240 Volts		208 Volts		120 Volts	
			Amps	Watts	Amps	Watts	Amps	Watts	Amps	Watts	Amps	Watts	Amps	Watts	Amps	Watts
ONIMBA	8′	6	2.04	102	0.85	88	0.75	90	4.34	902	5.00	1200	4.81	1000	- - -	- - -
	12′	8	2.72	136	2.60	270	1.23	148	7.22	1502	8.33	2000	7.21	1500	- - -	- - -

Guidelines & Control Settings

Model	24 hr Energy Usage (kWh)	Suction Pressure @ Case Outlet (psig)	Superheat Set Point @ Bulb (°F)	Discharge Air (°F)	Return Air (°F)	Discharge Air Velocity[1] (FPM)
ONIMBA-8′		35	6-8	25	34	180
ONIMBA-12′		35	6-8	25	34	180

[1] Average discharge air velocity at peak of defrost.

Condensing Unit Data

Model	Volts	Phase	Frequency (Hz)	HP	RLA[3] (amps)	LRA[4] (amps)	Refrig.	lbs of Refrig.
ONIMBA-8′	208	1	60	1	10.36	48.2	R22	8.2
ONIMBA-12′[2]	208	1	60	1	7.0	34.2	R22	12.6

[2] This case uses two of the condensing units listed above.

[3] RLA - Running Load Amps.

[4] LRA - Locked Rotor Amps.

Defrost Controls

Model	Defrosts Per Day	Electric Defrost		Timed Off Defrost		Hot Gas Defrost		Reverse Air Defrost	
		Fail-safe (min)	Termination Temp. (°F)	Fail-safe (min)	Termination Temp. (°F)	Fail-safe (min)	Termination Temp. (°F)	Fail-safe (min)	Termination Temp. (°F)
ONIMBA	3	35	47	- - - [5]	- - -	- - -	- - -	- - -	- - -

[5] NOTE: - - - not an option on this case model.

Medium Temperature Defrost Schedule

No. Per Day	Hours
1	12 midnight
2	12 am - 12 pm
3	6 am - 2 pm - 10 pm
4	12 - 6 am - 12 - 6 pm

All measurements are taken per ARI 1200 - 2002 specifications.

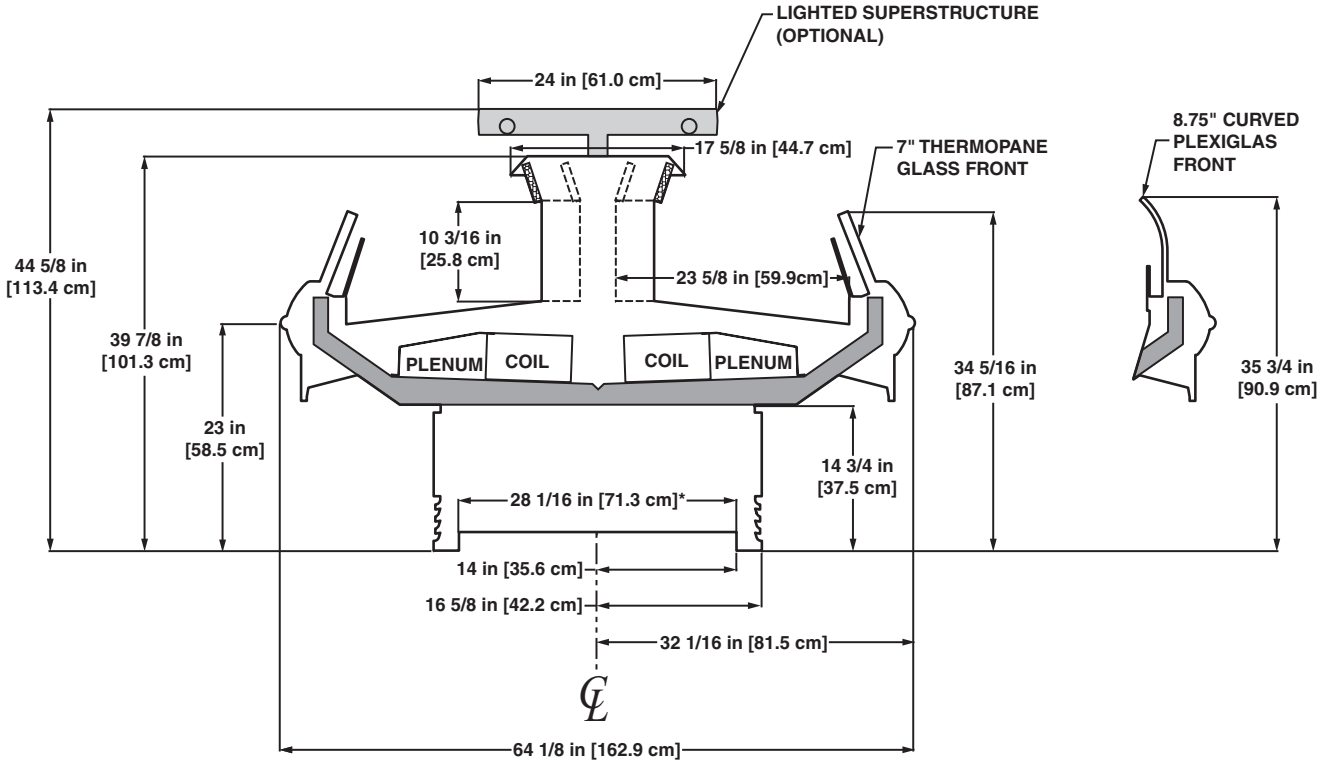

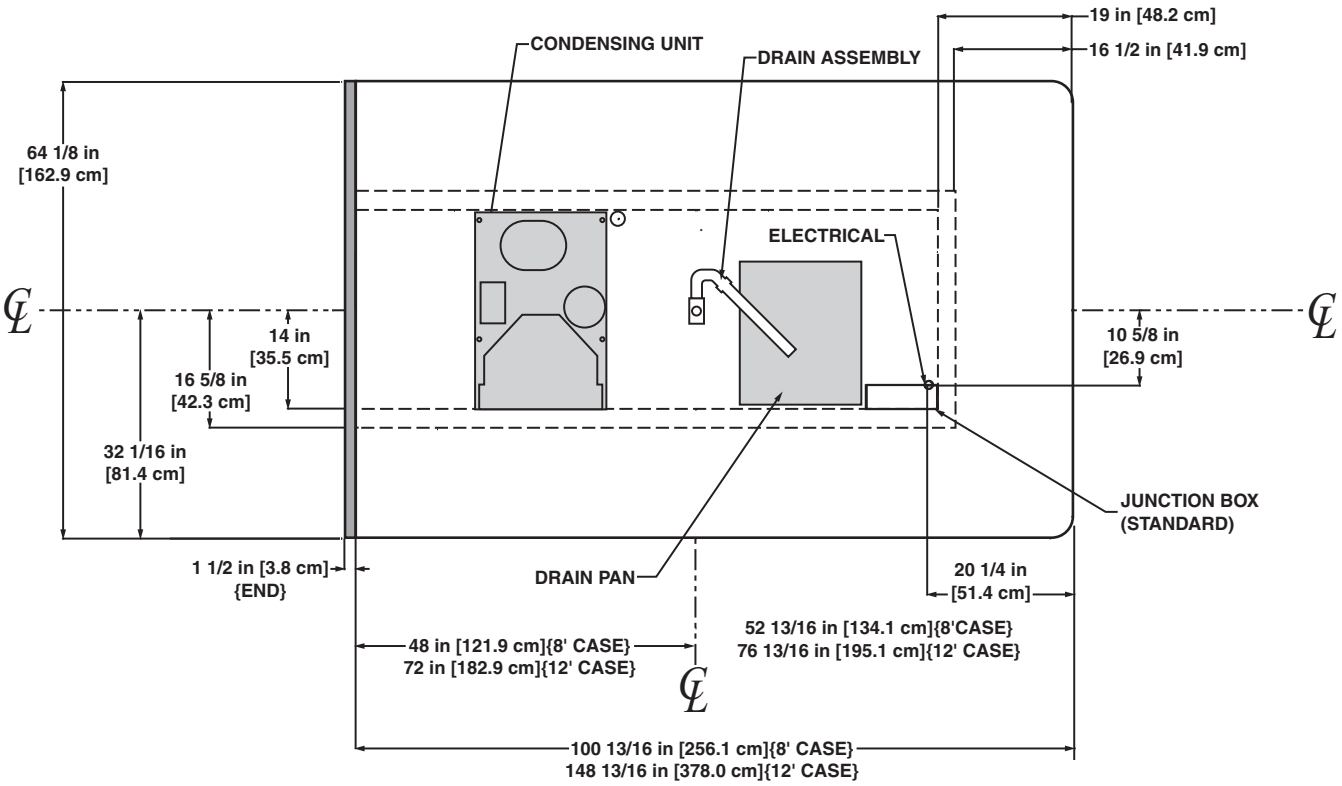

NOTES:

* STUB-UP AREA

Wide Island Deli/Meat Merchandiser

OIM - 8′ & 12′ double wraparound ends
OIMB - 6′, 8′ & 12′ single wraparound end
OIMBB - 8′ double joint ends

Electrical Data

Model		Fans per Case	Standard Fans 120 Volts Amps	Standard Fans 120 Volts Watts	High Efficiency Fans 120 Volts Amps	High Efficiency Fans 120 Volts Watts	Anti-Condensate Heaters 120 Volts Amps	Anti-Condensate Heaters 120 Volts Watts	Defrost Heaters 208 Volts Amps	Defrost Heaters 208 Volts Watts	Defrost Heaters 240 Volts Amps	Defrost Heaters 240 Volts Watts
OIM	8′	6	2.04	102	0.90	66	0.82	98	4.34	902	5.00	1200
	12′	8	2.72	136	1.20	88	1.08	130	7.22	1502	8.33	2000
OIMB	6′	4	1.36	76	0.60	44	0.57	68	3.25	676	3.75	900
	8′	6	2.04	102	0.90	66	0.75	90	4.34	902	5.00	1200
	12′	8	2.72	136	1.20	88	1.23	148	7.22	1502	8.33	2000
OIMBB	8′	6	2.04	102	0.90	66	0.92	110	4.34	902	5.00	1200

Lighting Data

Model		Typical per Light Row 120 Volts Amps	Typical per Light Row 120 Volts Watts	Maximum Lighting 120 Volts Amps	Maximum Lighting 120 Volts Watts
OIM	8′	NA[1]	NA	5.04	605
	12′	NA	NA	6.50	780
OIMB	6′	NA	NA	3.78	454
	8′	NA	NA	4.61	553
	12′	NA	NA	5.24	629
OIMBB	8′	NA	NA	3.25	390

[1] Not applicable.

Guidelines & Control Settings

Model	BTUH/ft[2]	Evaporator (°F)	Superheat Set Point @ Bulb (°F)	Discharge Air (°F)	Return Air (°F)	Discharge Air Velocity[3] (FPM)
OIM/OIMB/OIMBB Meat	770[4]	12	6-8	26	31	140
OIM/OIMB/OIMBB Deli	560[5]	17	6-8	28	33	140

[2] BTUHs/ft listed are for parallel operation. Conventional ratings may be approximated by multiplying listed rating by 1.04.

[3] Average discharge air velocity at peak of defrost.

[4] OIM (meat): +400 BTUH per wraparound end.

[5] OIM (deli): +250 BTUH per wraparound end.

Defrost Controls

Model	Defrosts Per Day	Run-Off Time (min)	Electric Defrost Fail-safe (min)	Electric Defrost Termination Temp. (°F)	Timed Off Defrost Fail-safe (min)	Timed Off Defrost Termination Temp. (°F)	Hot Gas Defrost Fail-safe (min)	Hot Gas Defrost Termination Temp. (°F)	Reverse Air Defrost Fail-safe (min)	Reverse Air Defrost Termination Temp. (°F)
OIM/OIMB/OIMBB	3	6 - 8	40	47	45	47	26	45	- - -[6]	- - -

[6] NOTE: - - - not an option on this case model.

Medium Temperature Defrost Schedule

No. Per Day	Hours
1	12 midnight
2	12 am - 12 pm
3	6 am - 2 pm - 10 pm
4	12 - 6 am - 12 - 6 pm

All measurements taken per ARI 1200 - 2002 specifications.

Hill PHOENIX EXCELLENCE

A DOVER COMPANY

NSF COMPONENT

c UL us

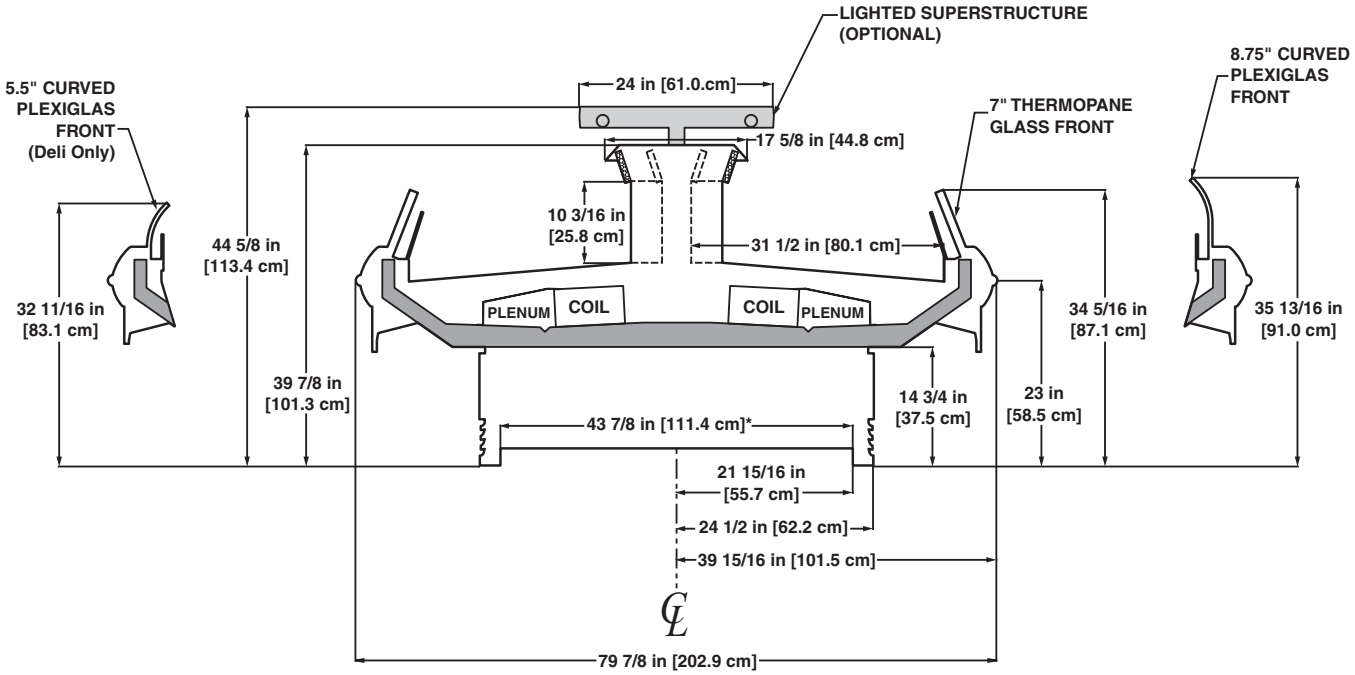

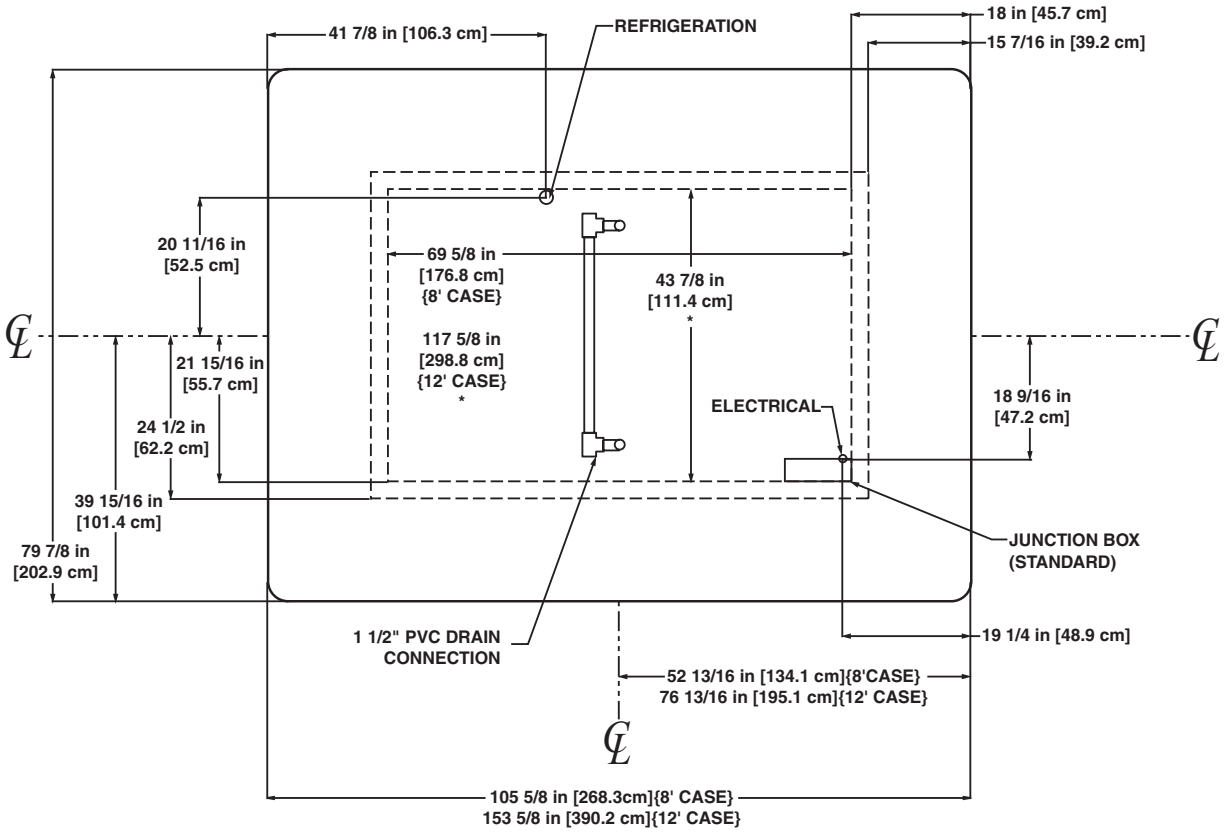

NOTES:

* STUB-UP AREA

• SUCTION LINE - 7/8", LIQUID LINE - 3/8"

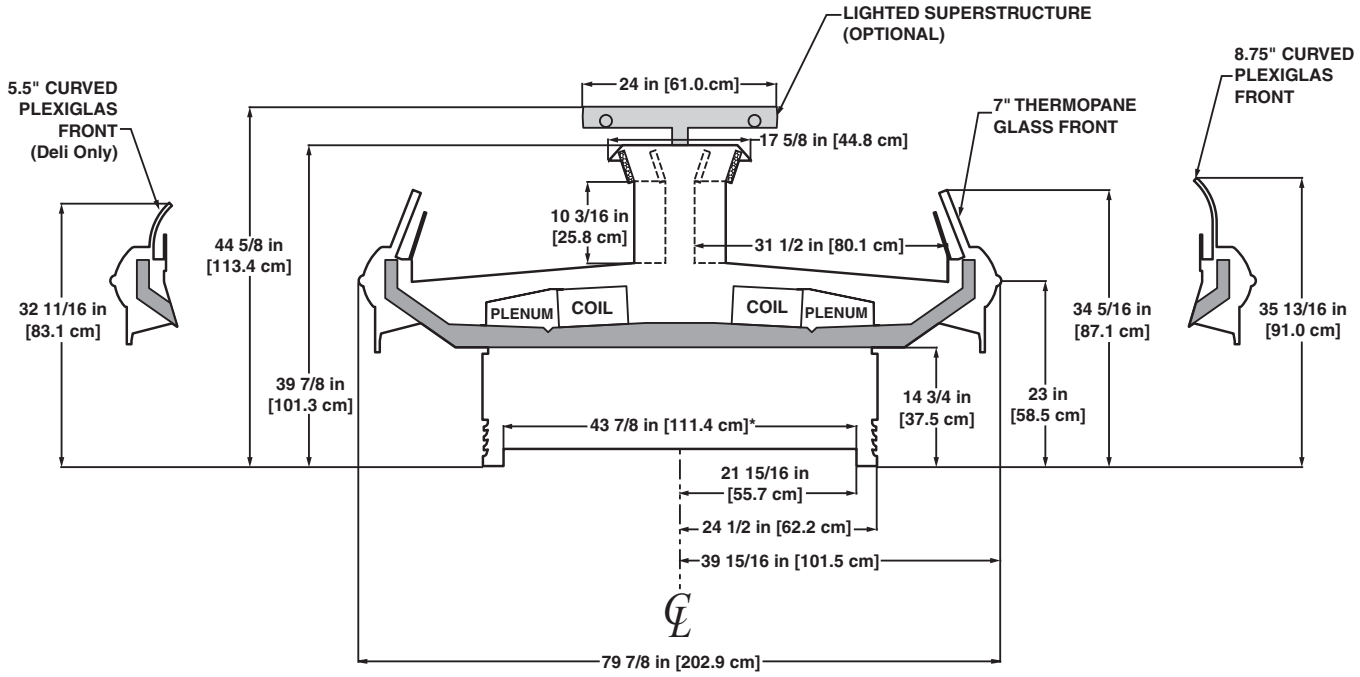

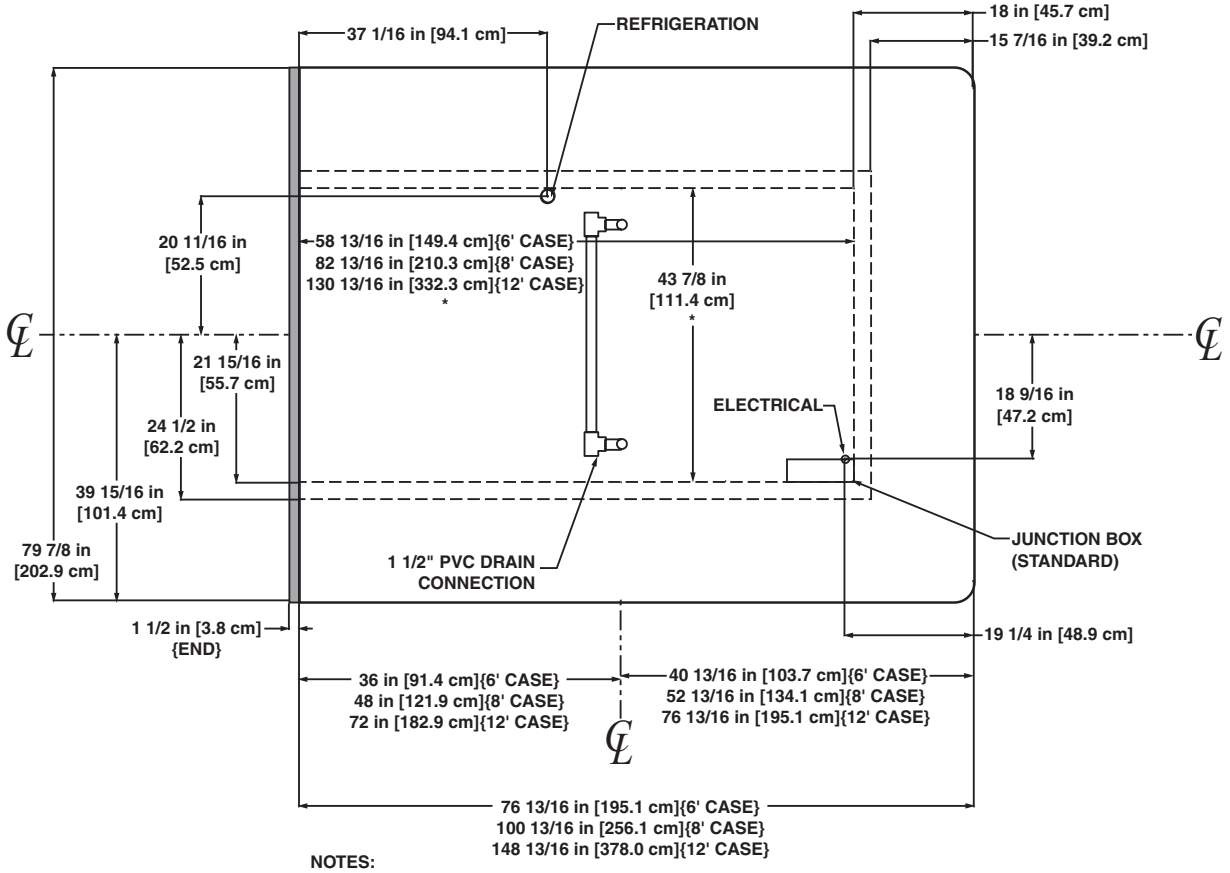

NOTES:

* STUB-UP AREA

• SUCTION LINE - 7/8", LIQUID LINE - 3/8"

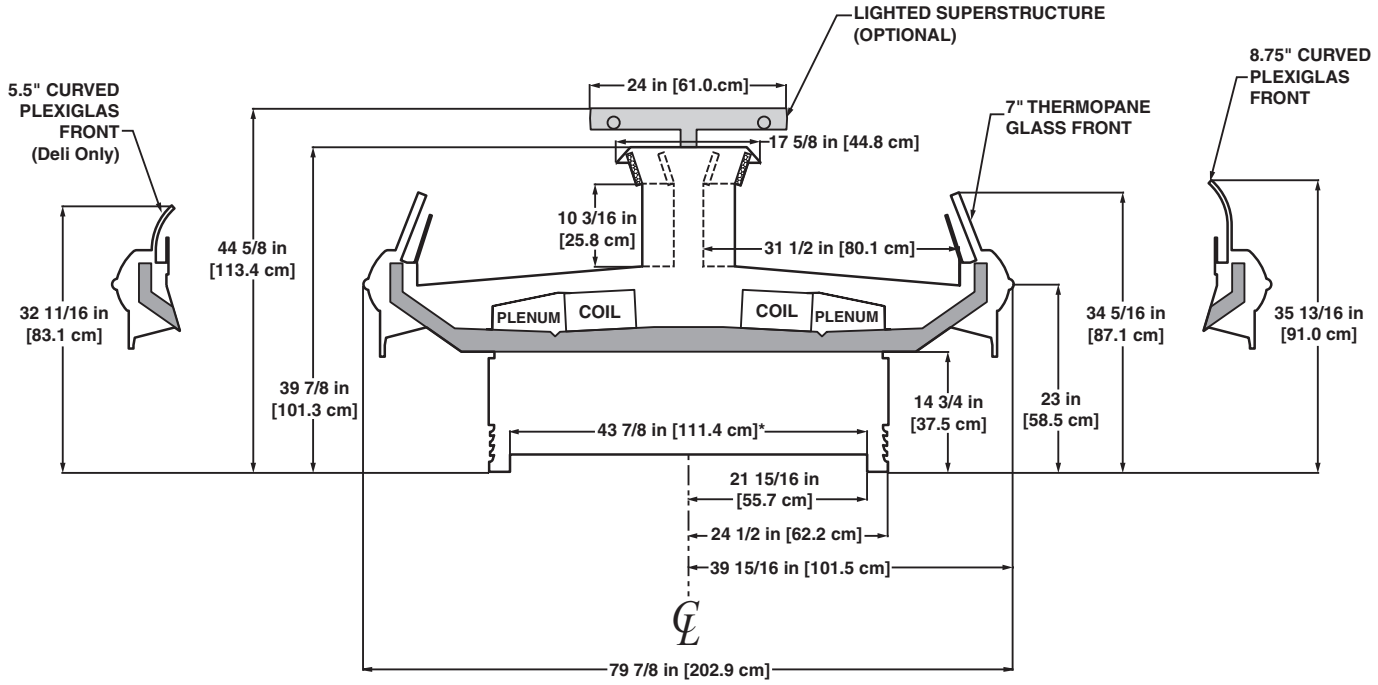

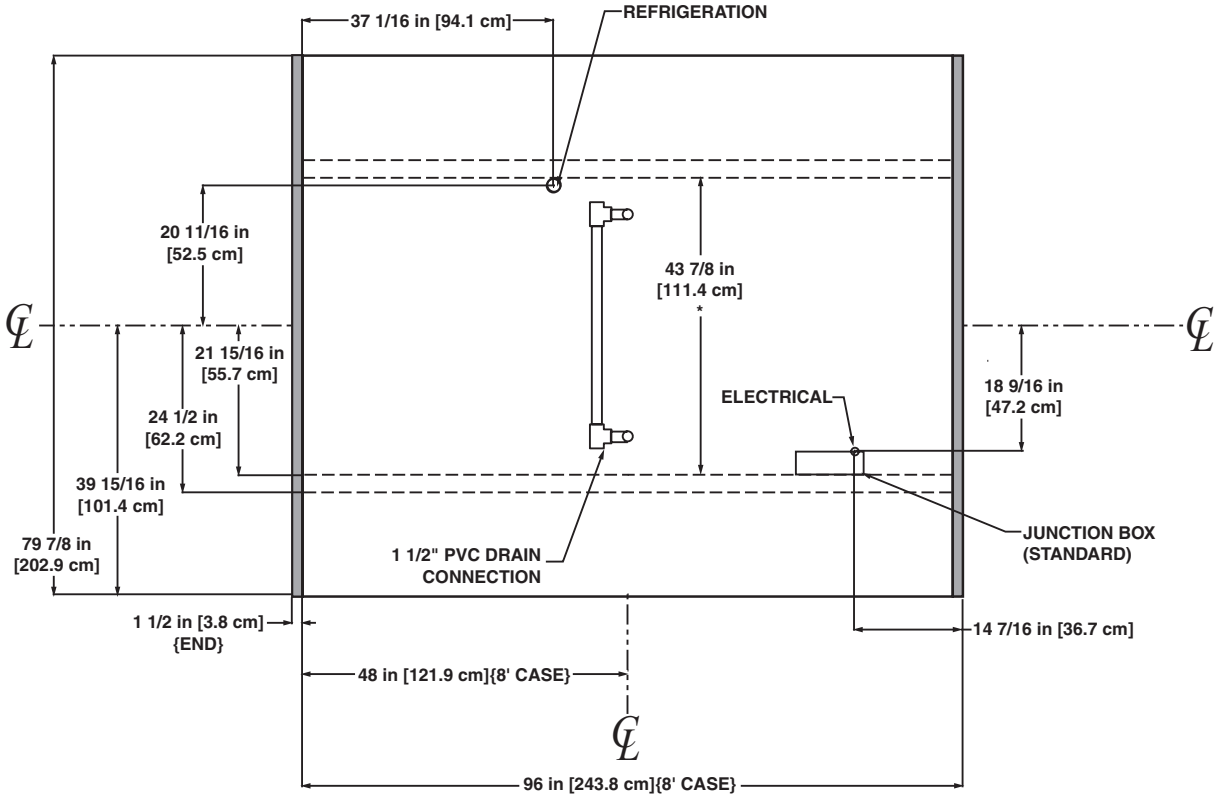

NOTES:

* STUB-UP AREA

• SUCTION LINE - 7/8", LIQUID LINE - 3/8"

Wide Island Self-Contained Deli/Meat Merchandiser

OIMA - 8′ & 12′

System Requirements

Model		Volts	Phase	Hz	Wire	Minimum Circuit Ampacity	Maximum Overcurrent Protection
OIMA	8′	208	1	60	3 wire + ground	23.655	40
	12′	208	1	60	3 wire + ground	28.435	45

Electrical Data

Model		Fans per Case	Standard Fans		Condenser Fans		Anti-Condensate Heaters		Defrost Heaters				Drain Heater		Maximum Lights	
			120 Volts		208 Volts		120 Volts		208 Volts		240 Volts		208 Volts		120 Volts	
			Amps	Watts	Amps	Watts	Amps	Watts	Amps	Watts	Amps	Watts	Amps	Watts	Amps	Watts
OIMA	8′	6	2.04	102	0.85	88	0.71	85	4.34	9.02	5.00	1200	4.81	1000	5.04	606
	12′	8	2.72	136	2.60	270	0.79	95	7.22	1502	8.33	2000	4.81	1000	6.50	780

Guidelines & Control Settings

Model	24 hr Energy Usage (kWh)	Suction Pressure @ Case Outlet (psig)	Superheat Set Point @ Bulb (°F)	Discharge Air (°F)	Return Air (°F)	Discharge Air Velocity[1] (FPM)
OIMA-8′		35	6-8	26	31	140
OIMA-12′		35	6-8	26	31	140

[1] Average discharge air velocity at peak of defrost.

Condensing Unit Data

Model	Volts	Phase	Frequency (Hz)	HP	RLA[3] (amps)	LRA[4] (amps)	Refrig.	lbs of Refrig.
OIMA-8′	208	1	60	1	10.36	48.2	R22	8.2
OIMA-12′[2]	208	1	60	1	7.0	34.2	R22	12.6

[2] This case uses two of the condensing units listed above.

[3] RLA - Running Load Amps.

[4] LRA - Locked Rotor Amps.

Defrost Controls

Model		Electric Defrost		Timed Off Defrost		Hot Gas Defrost		Reverse Air Defrost	
	Defrosts Per Day	Fail-safe (min)	Termination Temp. (°F)	Fail-safe (min)	Termination Temp. (°F)	Fail-safe (min)	Termination Temp. (°F)	Fail-safe (min)	Termination Temp. (°F)
OIMA	3	40	47	- - - [5]	- - -	- - -	- - -	- - -	- - -

[5] NOTE: - - - not an option on this case model.

Medium Temperature Defrost Schedule

No. Per Day	Hours
1	12 midnight
2	12 am - 12 pm
3	6 am - 2 pm - 10 pm
4	12 - 6 am - 12 - 6 pm

All measurements are taken per ARI 1200 - 2002 specifications.

Hill PHOENIX EXCELLENCE

A DOVER™ COMPANY

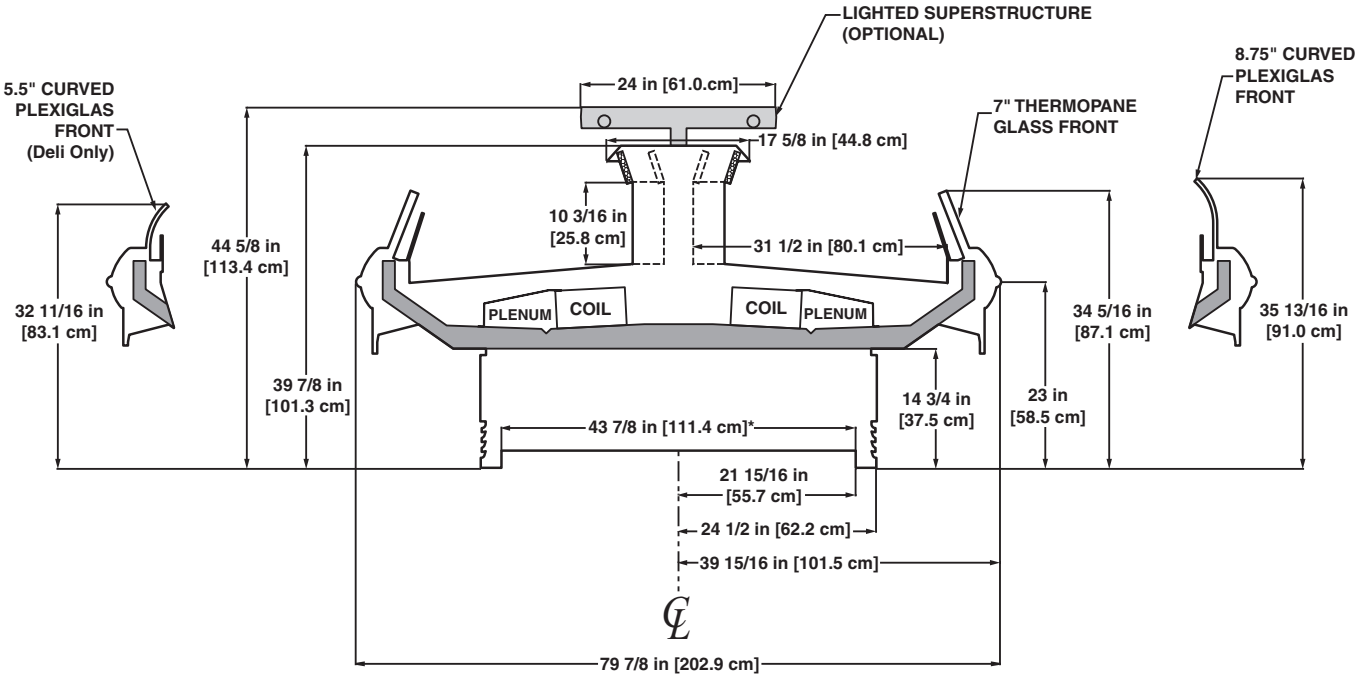

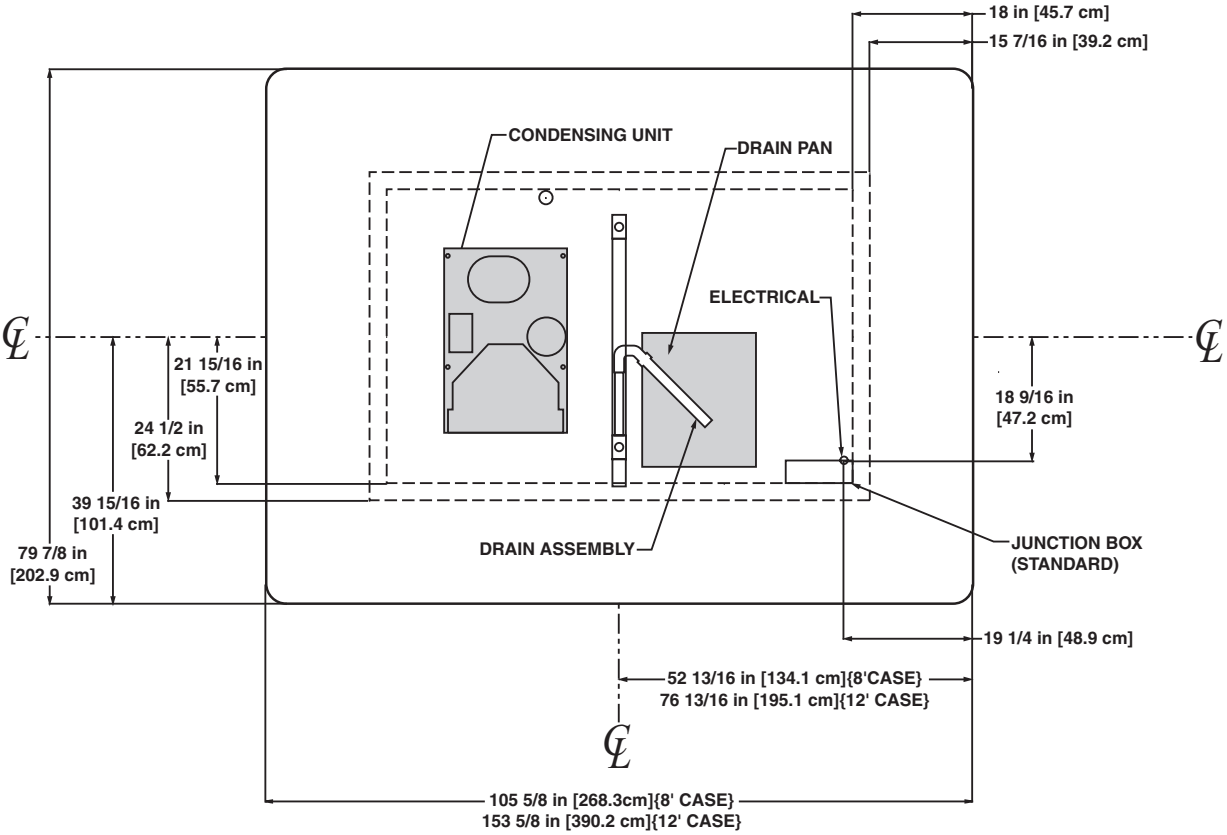

NOTES:

* STUB-UP AREA

Wide Island Self-Contained Deli/Meat Merchandiser

OIMBA - 6′ & 12′

System Requirements

Model		Volts	Phase	Hz	Wire	Minimum Circuit Ampacity	Maximum Overcurrent Protection
OIMBA	6′	208	1	60	3 wire + ground	17.047	30
	12′	208	1	60	3 wire + ground	26.619	45

Electrical Data

Model		Fans per Case	Standard Fans		Condenser Fan		Anti-Condensate Heaters		Defrost Heaters				Drain Heater		Maximum Lights	
			120 Volts		208 Volts		120 Volts		208 Volts		240 Volts		208 Volts		120 Volts	
			Amps	Watts	Amps	Watts	Amps	Watts	Amps	Watts	Amps	Watts	Amps	Watts	Amps	Watts
OIMBA	6′	4	1.36	76	2.60	270	0.57	68	3.25	676	3.75	900	7.21	1500	1.26	151
	12′	8	2.72	136	2.60	270	1.23	148	7.22	1502	8.33	2000	7.21	1500	1.46	175

Guidelines & Control Settings

Model	24 hr Energy Usage (kWh)	Suction Pressure @ Case Outlet (psig)	Superheat Set Point @ Bulb (°F)	Discharge Air (°F)	Return Air (°F)	Discharge Air Velocity[1] (FPM)
OIMBA-6′		35	6-8	26	31	140
OIMBA-12′		35	6-8	26	31	140

[1] Average discharge air velocity at peak of defrost.

Condensing Unit Data

Model	Volts	Phase	Frequency (Hz)	HP	RLA[3] (amps)	LRA[4] (amps)	Refrig.	lbs of Refrig.
OIMBA-6′	208	1	60	1	7.0	34.2	R22	8.2
OIMBA-12′[2]	208	1	60	1	7.0	34.2	R22	12.6

[2] This case uses two of the condensing units listed above.

[3] RLA - Running Load Amps.

[4] LRA - Locked Rotor Amps.

Defrost Controls

Model	Defrosts Per Day	Electric Defrost		Timed Off Defrost		Hot Gas Defrost		Reverse Air Defrost	
		Fail-safe (min)	Termination Temp. (°F)	Fail-safe (min)	Termination Temp. (°F)	Fail-safe (min)	Termination Temp. (°F)	Fail-safe (min)	Termination Temp. (°F)
OIMBA	3	40	47	- - - [5]	- - -	- - -	- - -	- - -	- - -

[5] NOTE: - - - not an option on this case model.

Medium Temperature Defrost Schedule

No. Per Day	Hours
1	12 midnight
2	12 am - 12 pm
3	6 am - 2 pm - 10 pm
4	12 - 6 am - 12 - 6 pm

All measurements are taken per ARI 1200 - 2002 specifications.

Hill PHOENIX EXCELLENCE

A DOVER™ COMPANY

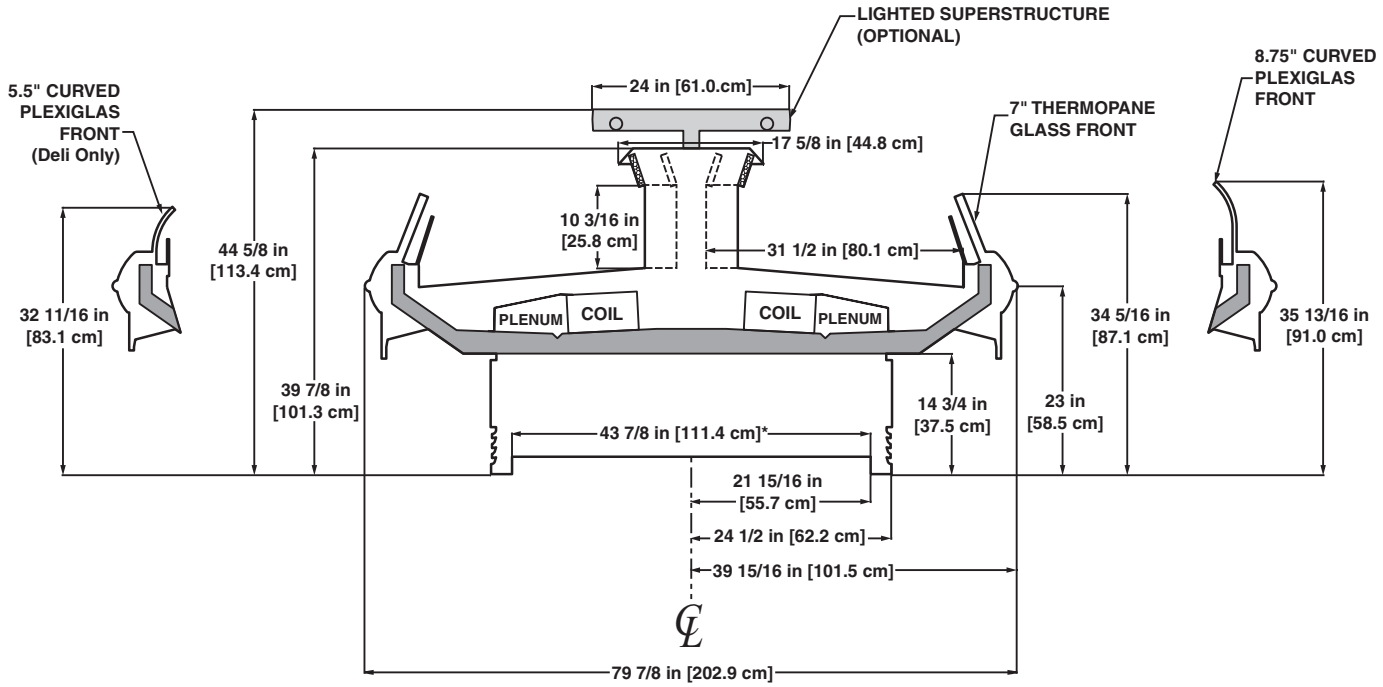

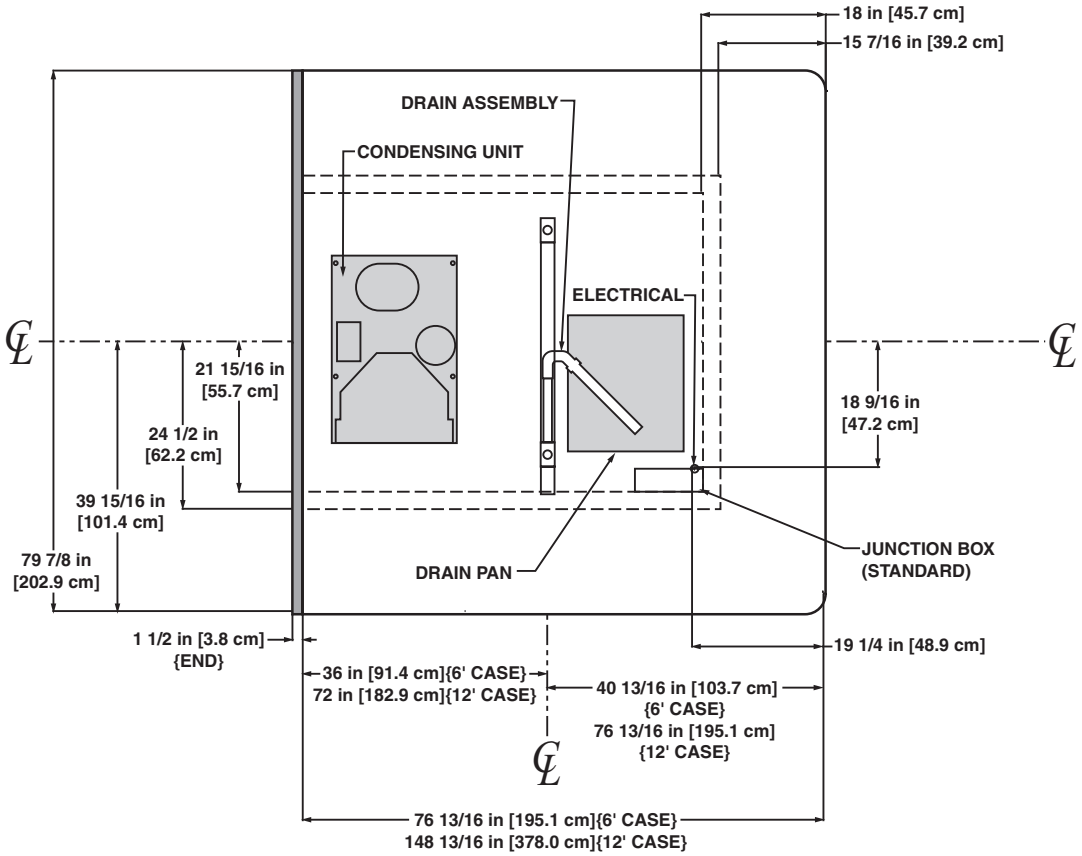

NOTES:

* STUB-UP AREA

Narrow Island Bulk Produce Merchandiser

ONIP - 8′ & 12′ narrow island double wraparound end
ONIPB - 6′, 8′, 10′ & 12′ narrow island single wraparound end
ONIPBB - 8′ & 12′ narrow island double joint

Electrical Data

Model		Fans per Case	Standard Fans 120 Volts Amps	Standard Fans 120 Volts Watts	High Efficiency Fans 120 Volts Amps	High Efficiency Fans 120 Volts Watts	Anti-Condensate Heaters 120 Volts Amps	Anti-Condensate Heaters 120 Volts Watts	Defrost Heaters 208 Volts Amps	Defrost Heaters 208 Volts Watts	Defrost Heaters 240 Volts Amps	Defrost Heaters 240 Volts Watts
ONIP	8′	6	2.04	102	0.90	66	0.23	28	- - -[1]	- - -	- - -	- - -
	12′	8	2.72	136	1.20	88	0.55	66	- - -	- - -	- - -	- - -
ONIPB	6′	4	1.36	76	0.60	44	0.31	37	- - -	- - -	- - -	- - -
	8′	6	2.04	102	0.90	66	0.46	55	- - -	- - -	- - -	- - -
	10′	6	2.04	102	0.90	66	0.66	79	- - -	- - -	- - -	- - -
	12′	8	2.72	136	1.20	88	0.78	94	- - -	- - -	- - -	- - -
ONIPBB	8′	6	2.04	102	0.90	66	0.84	101	- - -	- - -	- - -	- - -
	12′	8	2.72	136	1.20	88	1.26	151	- - -	- - -	- - -	- - -

[1] NOTE: - - - not an option on this case model.

Lighting Data

Model		Typical per Light Row 120 Volts Amps	Typical per Light Row 120 Volts Watts	Maximum Lighting 120 Volts Amps	Maximum Lighting 120 Volts Watts
ONIP	8′	NA[2]	NA	NA	NA
	12′	NA	NA	NA	NA
ONIPB	6′	NA	NA	NA	NA
	8′	NA	NA	NA	NA
	10′	NA	NA	NA	NA
	12′	NA	NA	NA	NA
ONIPBB	8′	NA	NA	NA	NA
	12′	NA	NA	NA	NA

[2] Not applicable.

Guidelines & Control Settings

Model	BTUH/ft[3]	Evaporator (°F)	Superheat Set Point @ Bulb (°F)	Discharge Air (°F)	Return Air (°F)	Discharge Air Velocity[4] (FPM)
ONIP/B/BB	650[5]	22	6-8	34	48	140

[3] BTUHs/ft listed are for parallel operation. Conventional ratings may be approximated by multiplying listed rating by 1.04.

[4] Average discharge air velocity at peak of defrost.

[5] ONIP: +600 BTUH per wraparound end.

Defrost Controls

Model	Defrosts Per Day	Run-Off Time (min)	Electric Defrost Fail-safe (min)	Electric Defrost Termination Temp. (°F)	Timed Off Defrost Fail-safe (min)	Timed Off Defrost Termination Temp. (°F)	Hot Gas Defrost Fail-safe (min)	Hot Gas Defrost Termination Temp. (°F)	Reverse Air Defrost Fail-safe (min)	Reverse Air Defrost Termination Temp. (°F)
ONIP/B/BB	3	6 - 8	- - -	- - -	44	38	- - -	- - -	- - -	- - -

Medium Temperature Defrost Schedule

No. Per Day	Hours
1	12 midnight
2	12 am - 12 pm
3	6 am - 2 pm - 10 pm
4	12 - 6 am - 12 - 6 pm

All measurements are taken per ARI 1200 - 2002 specifications.

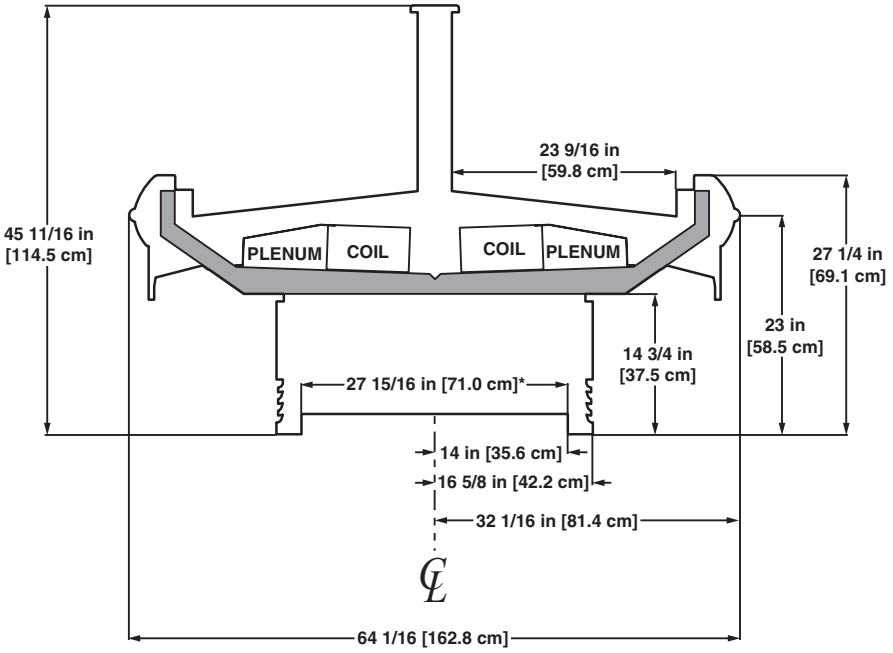

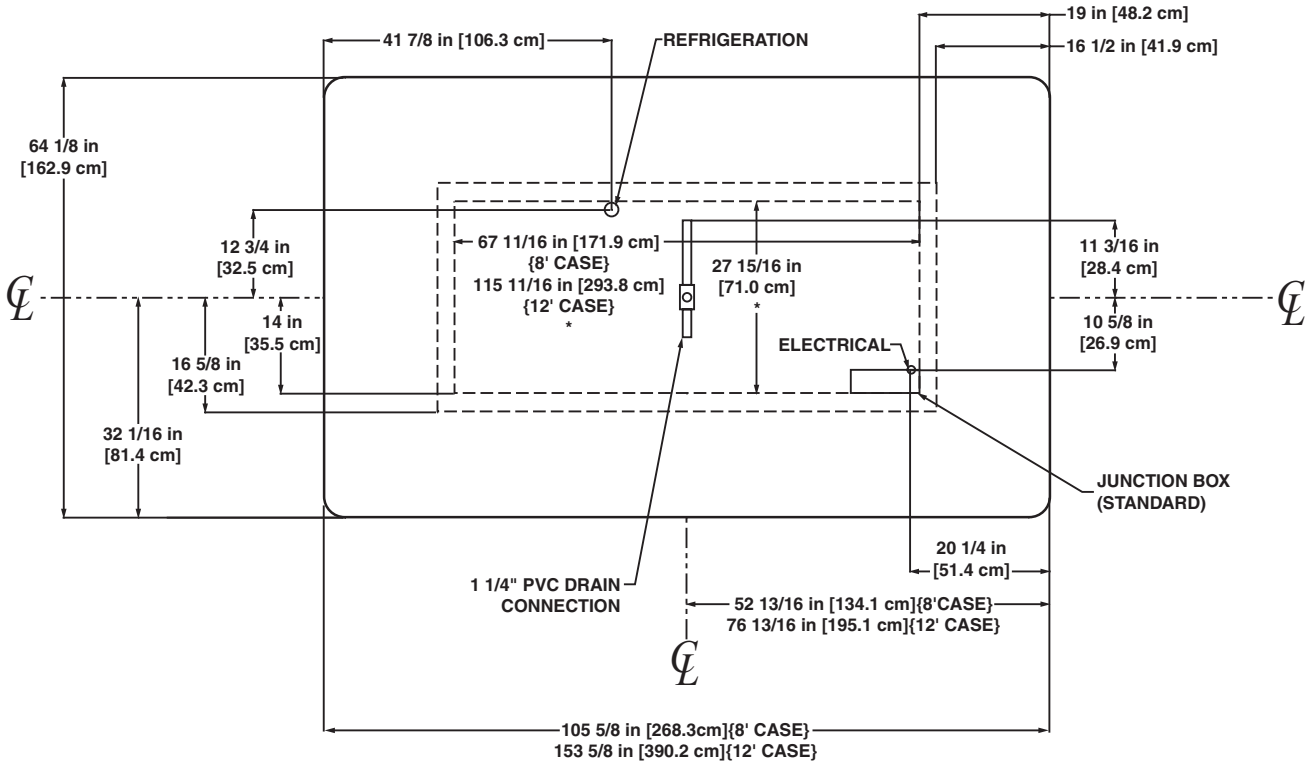

NOTES:

* STUB-UP AREA

• SUCTION LINE - 7/8", LIQUID LINE - 1/2"

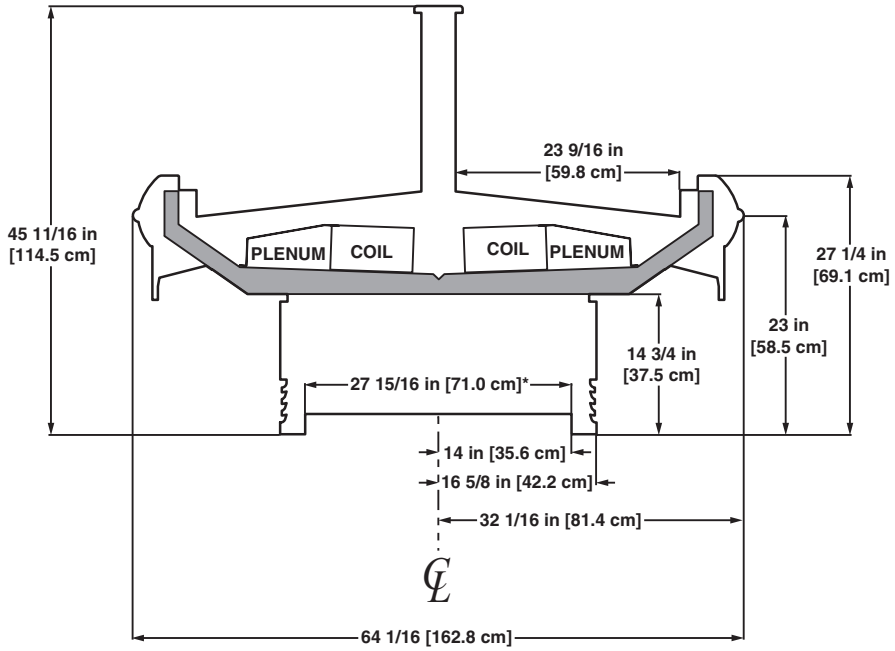

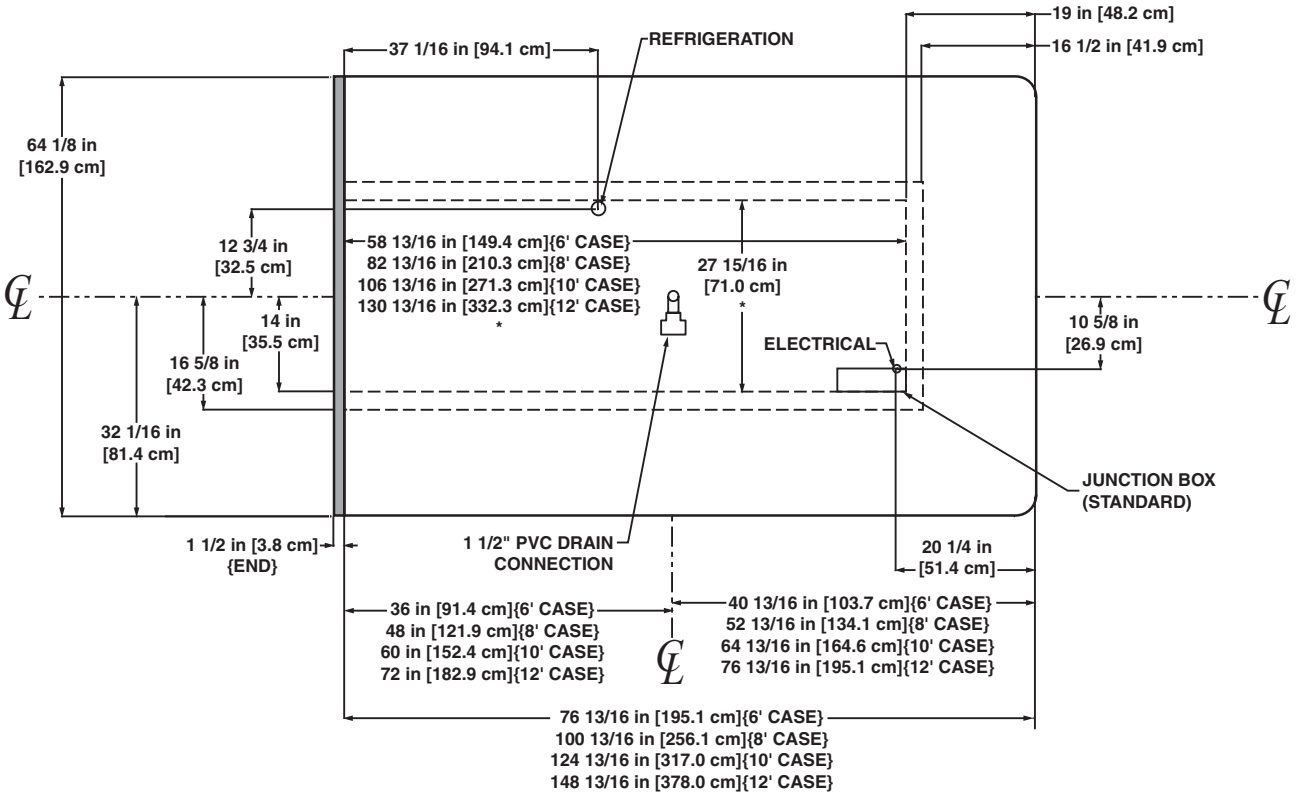

NOTES:

* STUB-UP AREA

• SUCTION LINE - 7/8", LIQUID LINE - 3/8"

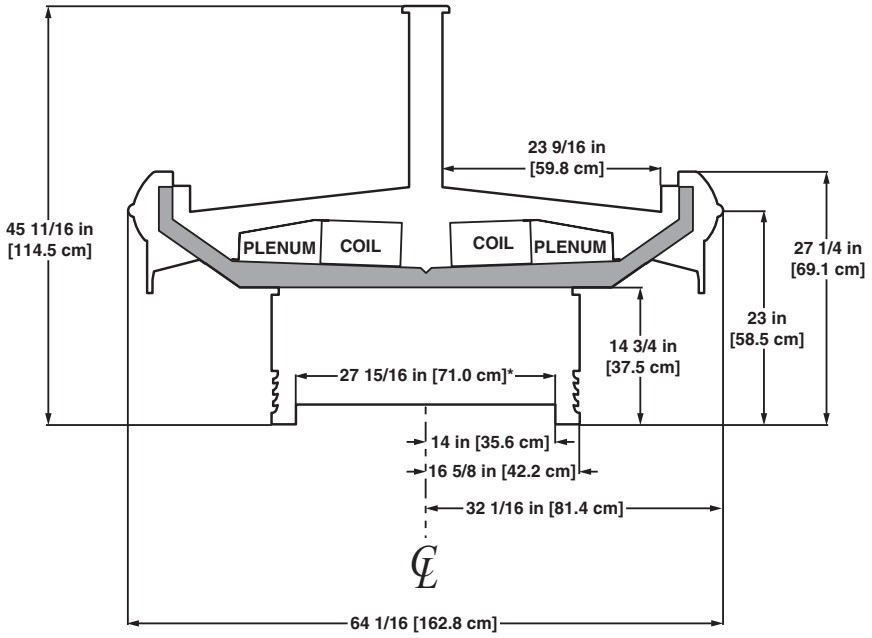

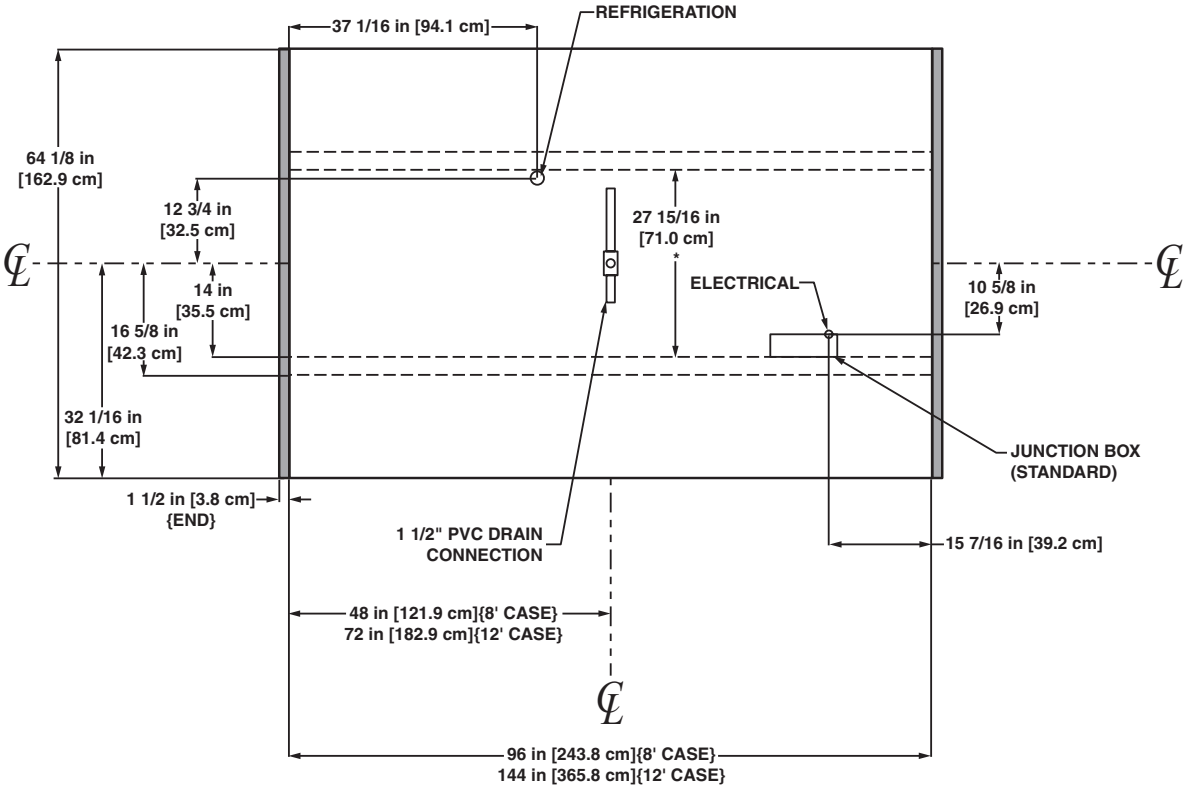

NOTES:

* STUB-UP AREA

• SUCTION LINE - 7/8", LIQUID LINE - 3/8"

Wide Island Bulk Produce Merchandiser

OIP - 8′ & 12′ wide island double wraparound end
OIPB - 6′, 8′, 10′ & 12′ wide island single wraparound end
OIPBB - 8′ & 12′ wide island double joint

Electrical Data

Model		Fans per Case	Standard Fans 120 Volts Amps	Standard Fans 120 Volts Watts	High Efficiency Fans 120 Volts Amps	High Efficiency Fans 120 Volts Watts	Anti-Condensate Heaters 120 Volts Amps	Anti-Condensate Heaters 120 Volts Watts	Defrost Heaters 208 Volts Amps	Defrost Heaters 208 Volts Watts	Defrost Heaters 240 Volts Amps	Defrost Heaters 240 Volts Watts
OIP	8′	6	2.04	102	0.90	66	0.23	28	- - -[1]	- - -	- - -	- - -
	12′	8	2.72	136	1.20	88	0.55	66	- - -	- - -	- - -	- - -
OIPB	6′	4	1.36	76	0.60	44	0.31	37	- - -	- - -	- - -	- - -
	8′	6	2.04	102	0.90	66	0.46	55	- - -	- - -	- - -	- - -
	10′	6	2.04	102	0.90	66	0.66	79	- - -	- - -	- - -	- - -
	12′	8	2.72	136	1.20	88	0.78	94	- - -	- - -	- - -	- - -
OIPBB	8′	6	2.04	102	0.90	66	0.84	101	- - -	- - -	- - -	- - -
	12′	8	2.72	136	1.20	88	1.26	151	- - -	- - -	- - -	- - -

[1] NOTE: - - - not an option on this case model.

Lighting Data

Model		Typical per Light Row 120 Volts Amps	Typical per Light Row 120 Volts Watts	Maximum Lighting 120 Volts Amps	Maximum Lighting 120 Volts Watts
OIP	8′	NA[2]	NA	3.78	454
	12′	NA	NA	5.04	605
OIPB	6′	NA	NA	1.89	227
	8′	NA	NA	3.15	378
	10′	NA	NA	- - -	- - -
	12′	NA	NA	4.41	529
OIPBB	8′	NA	NA	2.52	302
	12′	NA	NA	3.78	454

[2] Not applicable.

Guidelines & Control Settings

Model	BTUH/ft[3]	Evaporator (°F)	Superheat Set Point @ Bulb (°F)	Discharge Air (°F)	Return Air (°F)	Discharge Air Velocity[4] (FPM)
OIP/OIPB/OIPBB	650[5]	22	6-8	34	48	140

[3] BTUHs/ft listed are for parallel operation. Conventional ratings may be approximated by multiplying listed rating by 1.04.

[4] Average discharge air velocity at peak of defrost.

[5] OIP: +600 BTUH per wraparound end.

Defrost Controls

Model	Defrosts Per Day	Run-Off Time (min)	Electric Defrost Fail-safe (min)	Electric Defrost Termination Temp. (°F)	Timed Off Defrost Fail-safe (min)	Timed Off Defrost Termination Temp. (°F)	Hot Gas Defrost Fail-safe (min)	Hot Gas Defrost Termination Temp. (°F)	Reverse Air Defrost Fail-safe (min)	Reverse Air Defrost Termination Temp. (°F)
OIP/OIPB/OIPBB	3	6 - 8	- - -	- - -	44	38	- - -	- - -	- - -	- - -

Medium Temperature Defrost Schedule

No. Per Day	Hours
1	12 midnight
2	12 am - 12 pm
3	6 am - 2 pm - 10 pm
4	12 - 6 am - 12 - 6 pm

All measurements are taken per ARI 1200 - 2002 specifications.

Hill PHOENIX EXCELLENCE

A DOVER COMPANY

NSF COMPONENT

c UL us

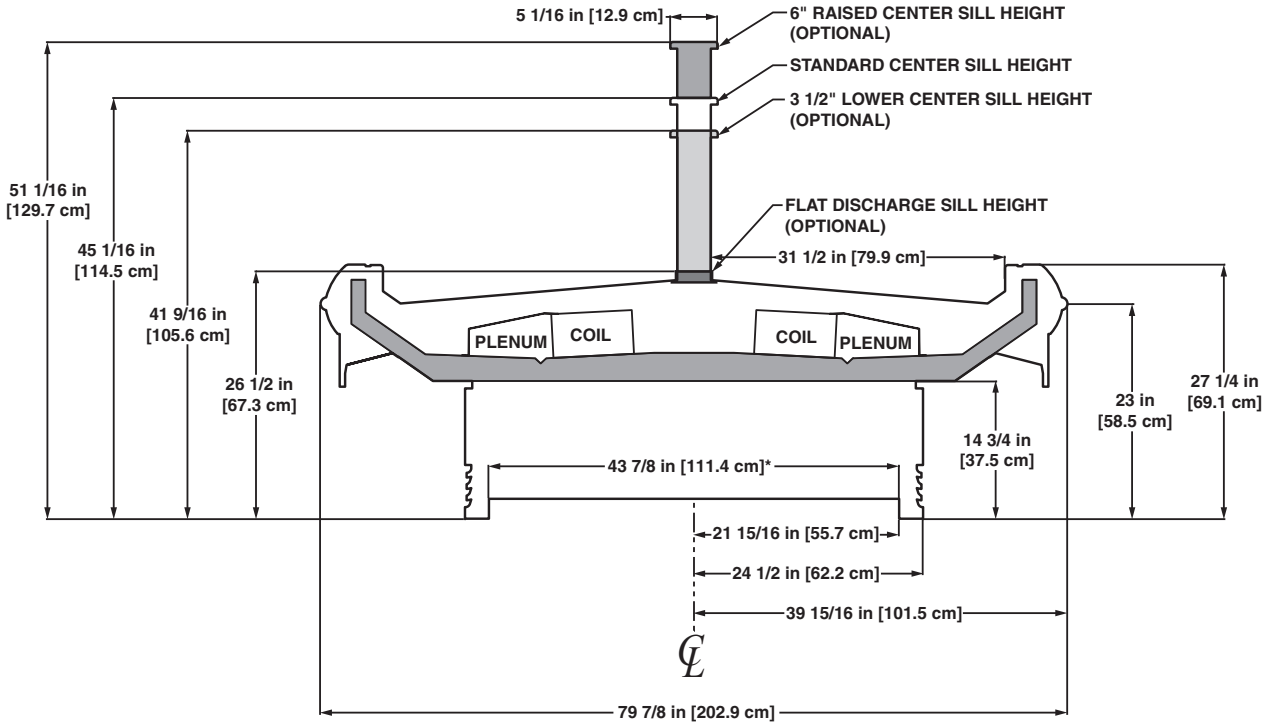

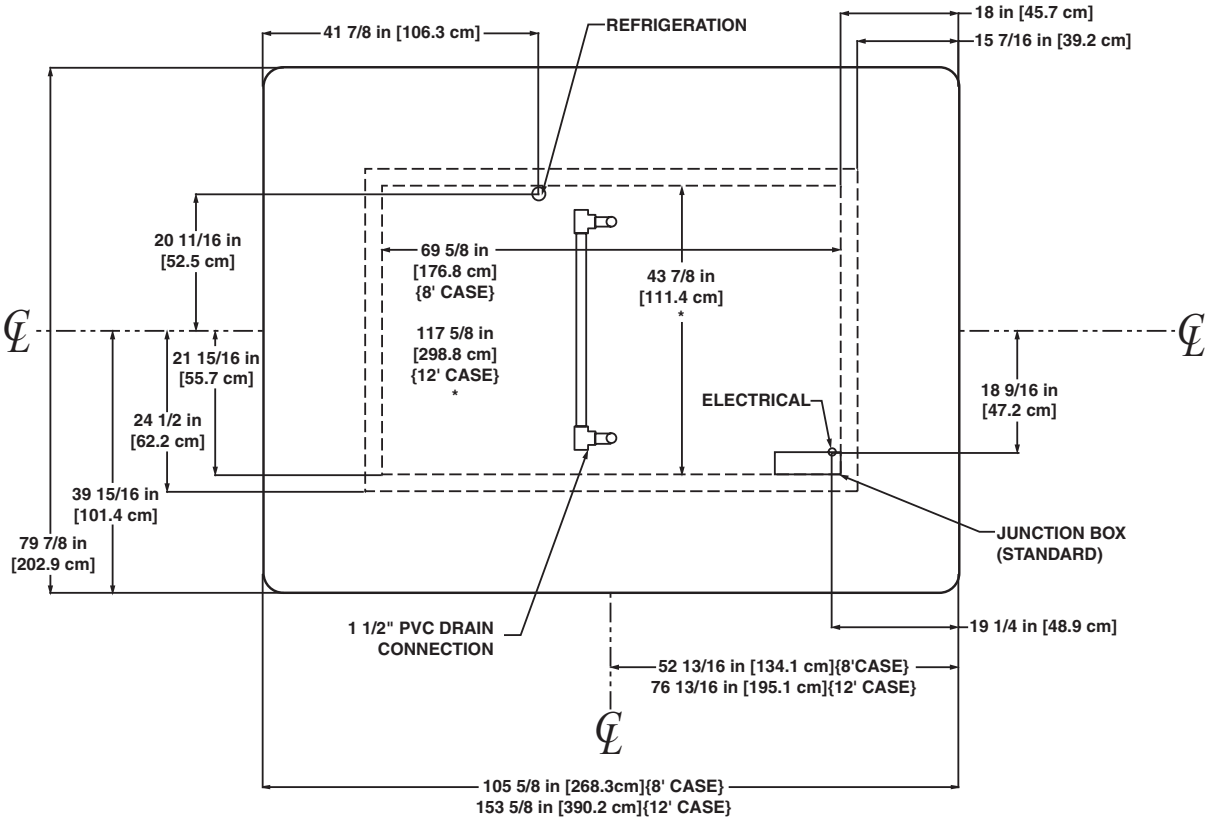

NOTES:

* STUB-UP AREA

• SUCTION LINE - 7/8", LIQUID LINE - 3/8"

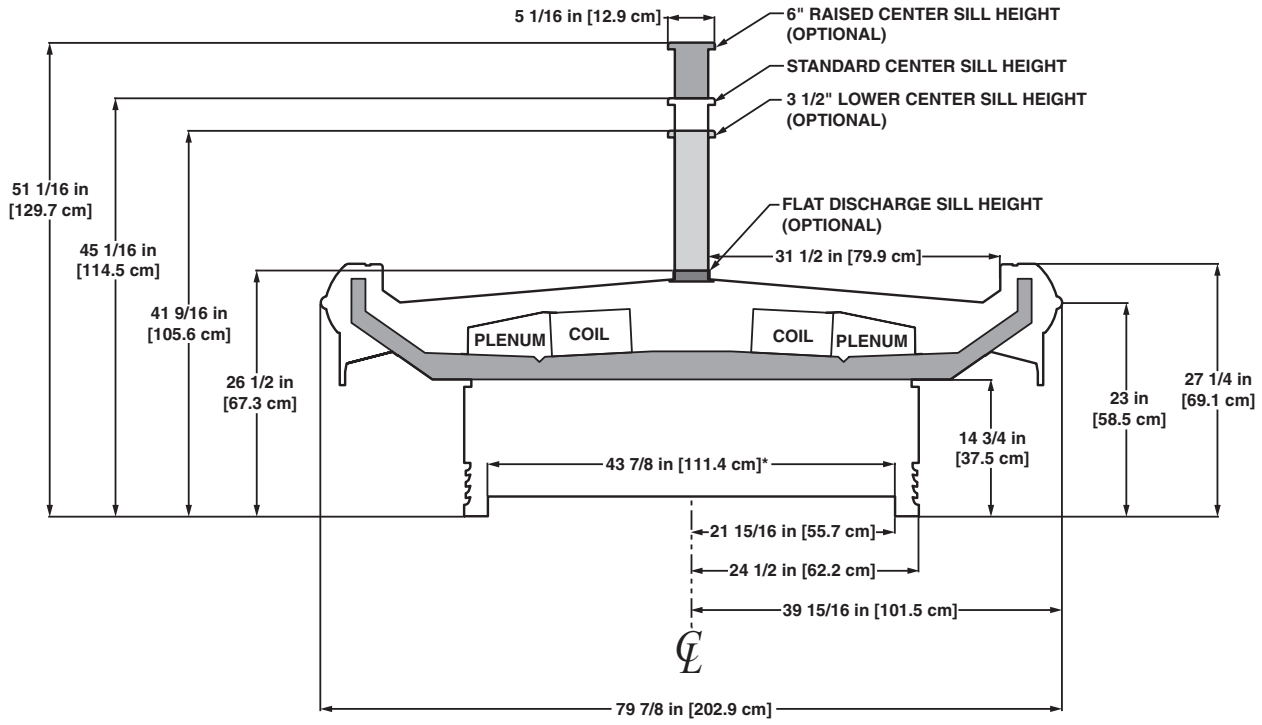

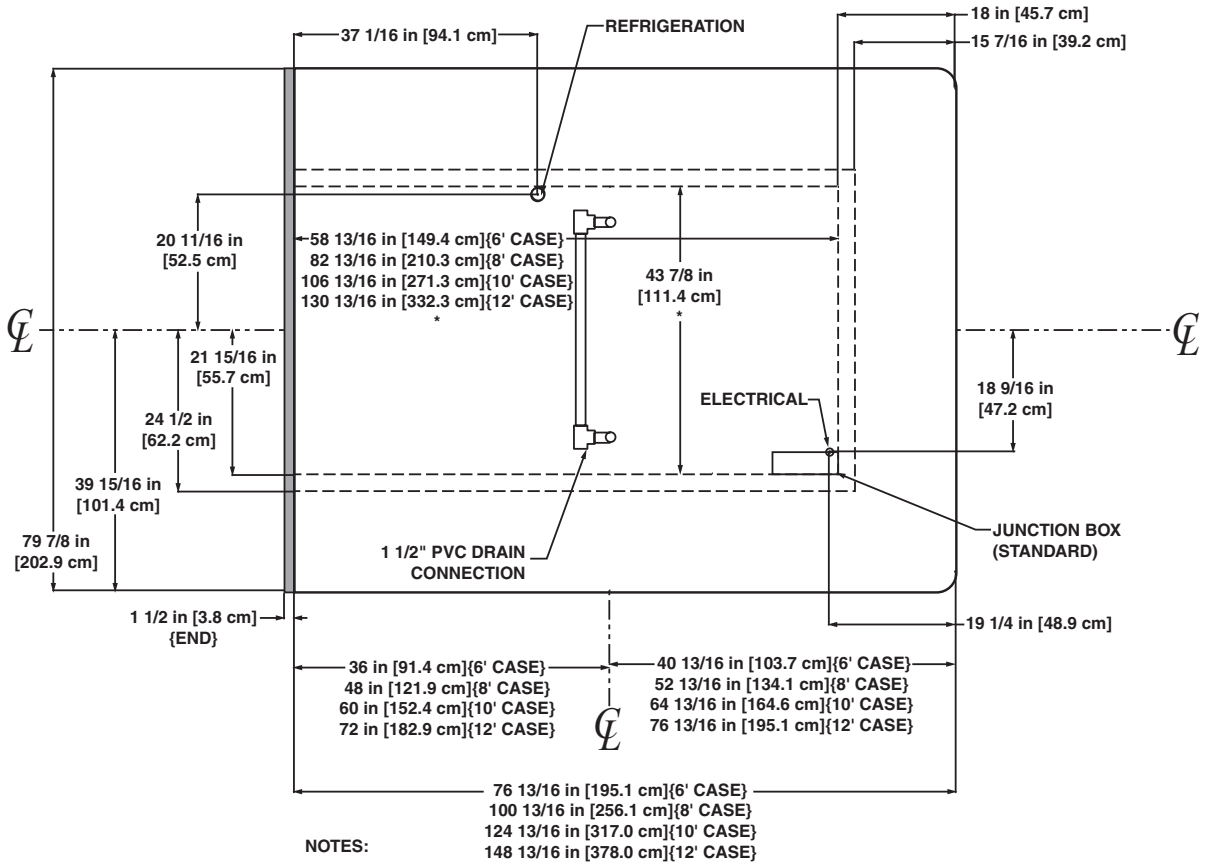

NOTES:

* STUB-UP AREA

• SUCTION LINE - 7/8", LIQUID LINE - 3/8"

NSF COMPONENT

c UL us

A DOVER COMPANY

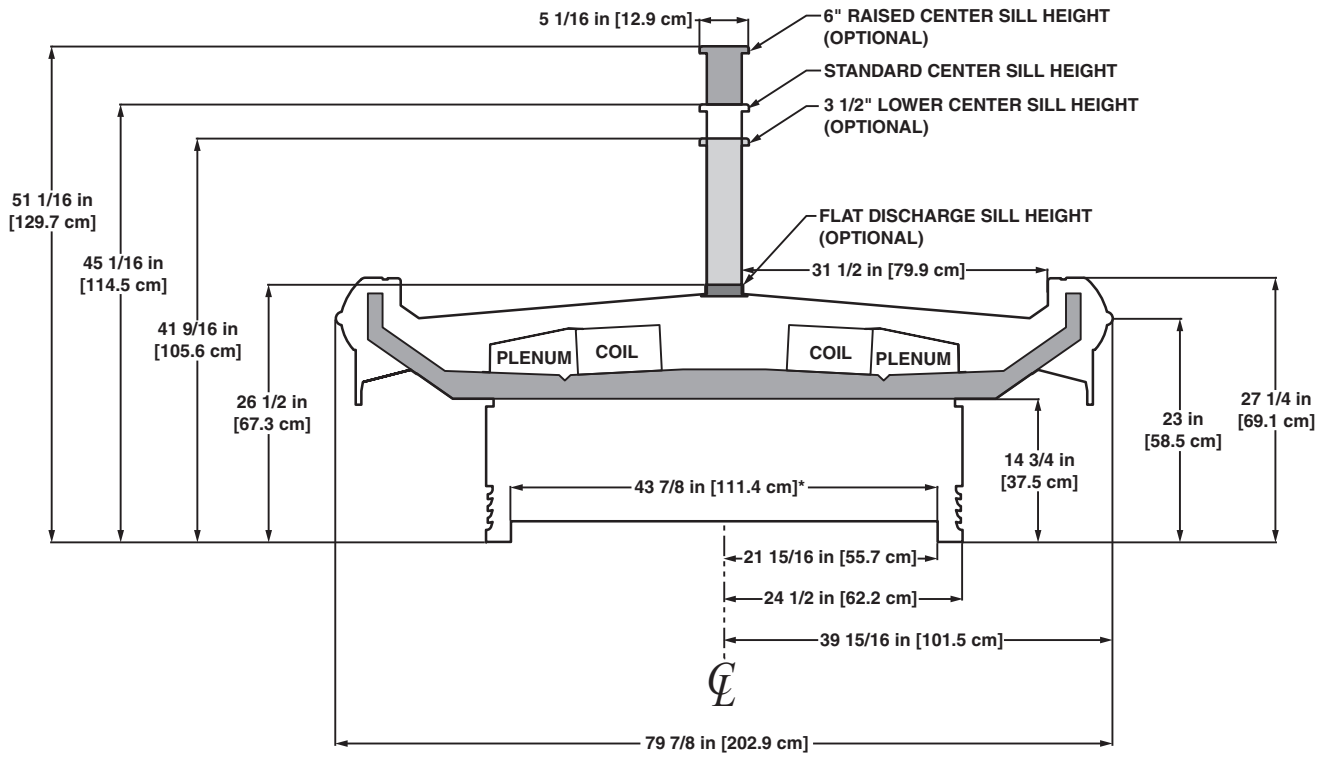

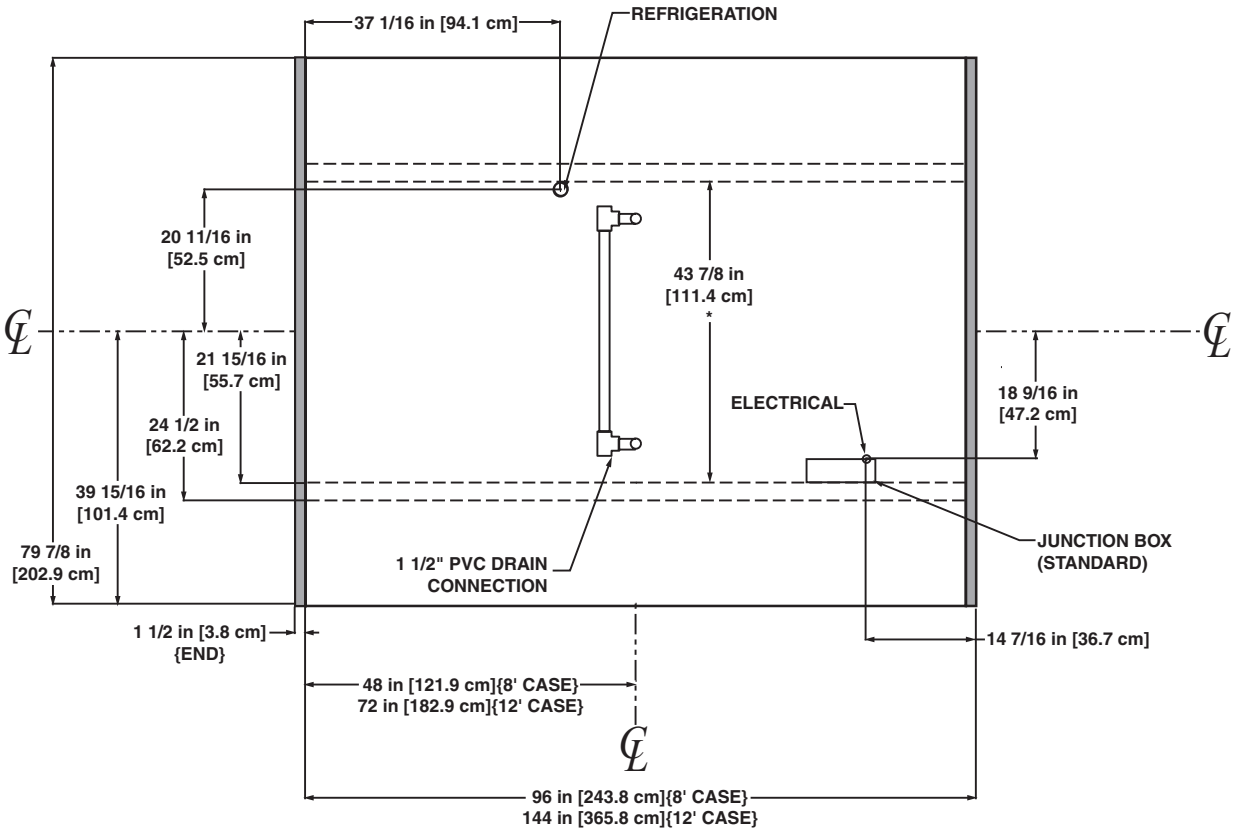

NOTES:

* STUB-UP AREA

• SUCTION LINE - 7/8", LIQUID LINE - 3/8"

Wide Island Self-Contained Bulk Produce Merchandiser

OIPA - 8′ & 12′

System Requirements

Model		Volts	Phase	Hz	Wire	Minimum Circuit Ampacity	Maximum Overcurrent Protection
OIPA	8′	208	1	60	3 wire + ground	8.973	20
	12′	208	1	60	3 wire + ground	29.119	40

Electrical Data

Model		Fans per Case	Standard Fans		Condenser Fan		Anti-Condensate Heaters		Defrost Heaters				Drain Heater		Maximum Lights	
			120 Volts		208 Volts		120 Volts		208 Volts		240 Volts		208 Volts		120 Volts	
			Amps	Watts	Amps	Watts	Amps	Watts	Amps	Watts	Amps	Watts	Amps	Watts	Amps	Watts
OIPA	8′	6	2.04	102	0.85	88	0.23	28	- - - [1]	- - -	- - -	- - -	4.81	1000	3.78	454
	12′	8	2.72	136	2.60	270	0.55	66	- - -	- - -	- - -	- - -	4.81	1000	5.04	605

[1] NOTE: - - - not an option on this case model.

Guidelines & Control Settings

Model	24 hr Energy Usage (kWh)	Suction Pressure @ Case Outlet (psig)	Superheat Set Point @ Bulb (°F)	Discharge Air (°F)	Return Air (°F)	Discharge Air Velocity[2] (FPM)
OIPA-8′		45	6-8	34	48	140
OIPA-12′		45	6-8	34	48	140

[2] Average discharge air velocity at peak of defrost.

Condensing Unit Data

Model	Volts	Phase	Frequency (Hz)	HP	RLA[4] (amps)	LRA[5] (amps)	Refrig.	lbs of Refrig.
OIPA-8′	208	1	60	1	6.7	33.5	R22	7.8
OIPA-12′[3]	208	1	60	3/4	7.14	35.5	R22	11.9

[3] This case uses two of the condensing units listed above.

[4] RLA - Running Load Amps.

[5] LRA - Locked Rotor Amps.

Defrost Controls

Model	Defrosts Per Day	Electric Defrost		Timed Off Defrost		Hot Gas Defrost		Reverse Air Defrost	
		Fail-safe (min)	Termination Temp. (°F)	Fail-safe (min)	Termination Temp. (°F)	Fail-safe (min)	Termination Temp. (°F)	Fail-safe (min)	Termination Temp. (°F)
OIPA	3	- - -	- - -	44	38	- - -	- - -	- - -	- - -

Medium Temperature Defrost Schedule

No. Per Day	Hours
1	12 midnight
2	12 am - 12 pm
3	6 am - 2 pm - 10 pm
4	12 - 6 am - 12 - 6 pm

All measurements are taken per ARI 1200 - 2002 specifications.

Hill PHOENIX EXCELLENCE

A DOVER COMPANY

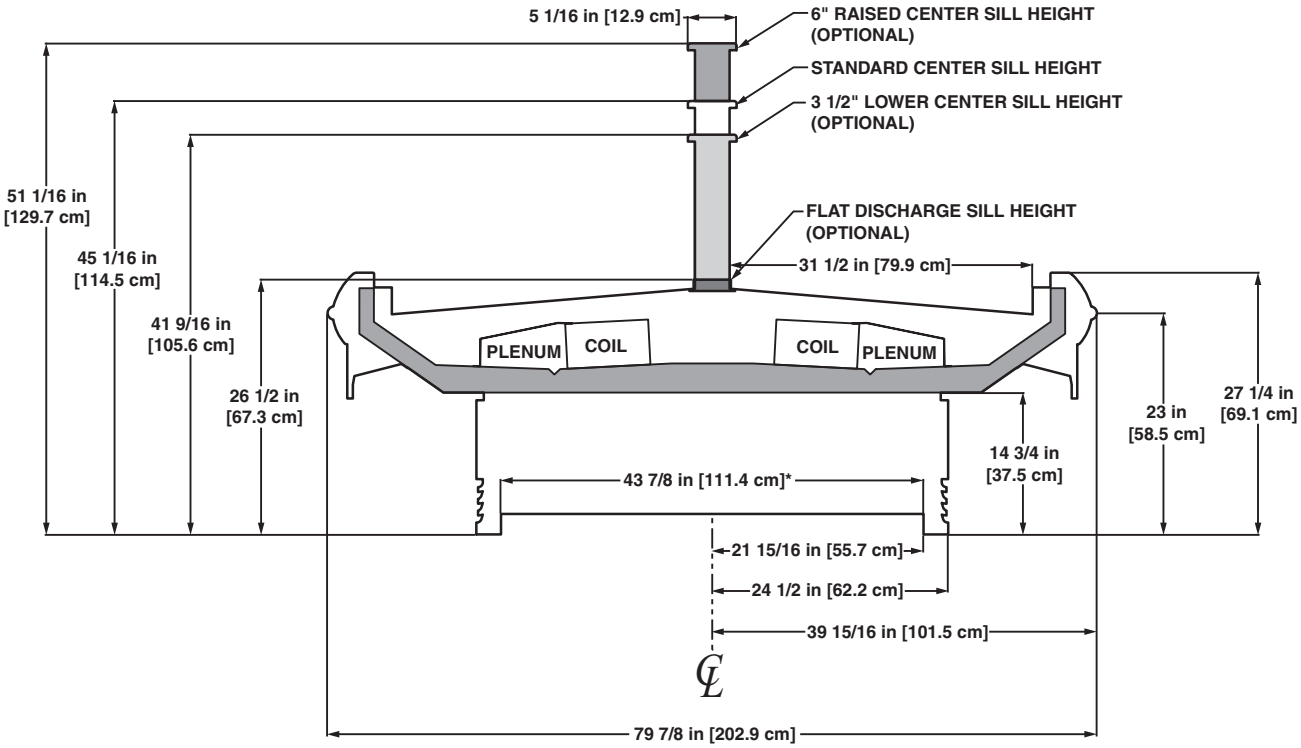

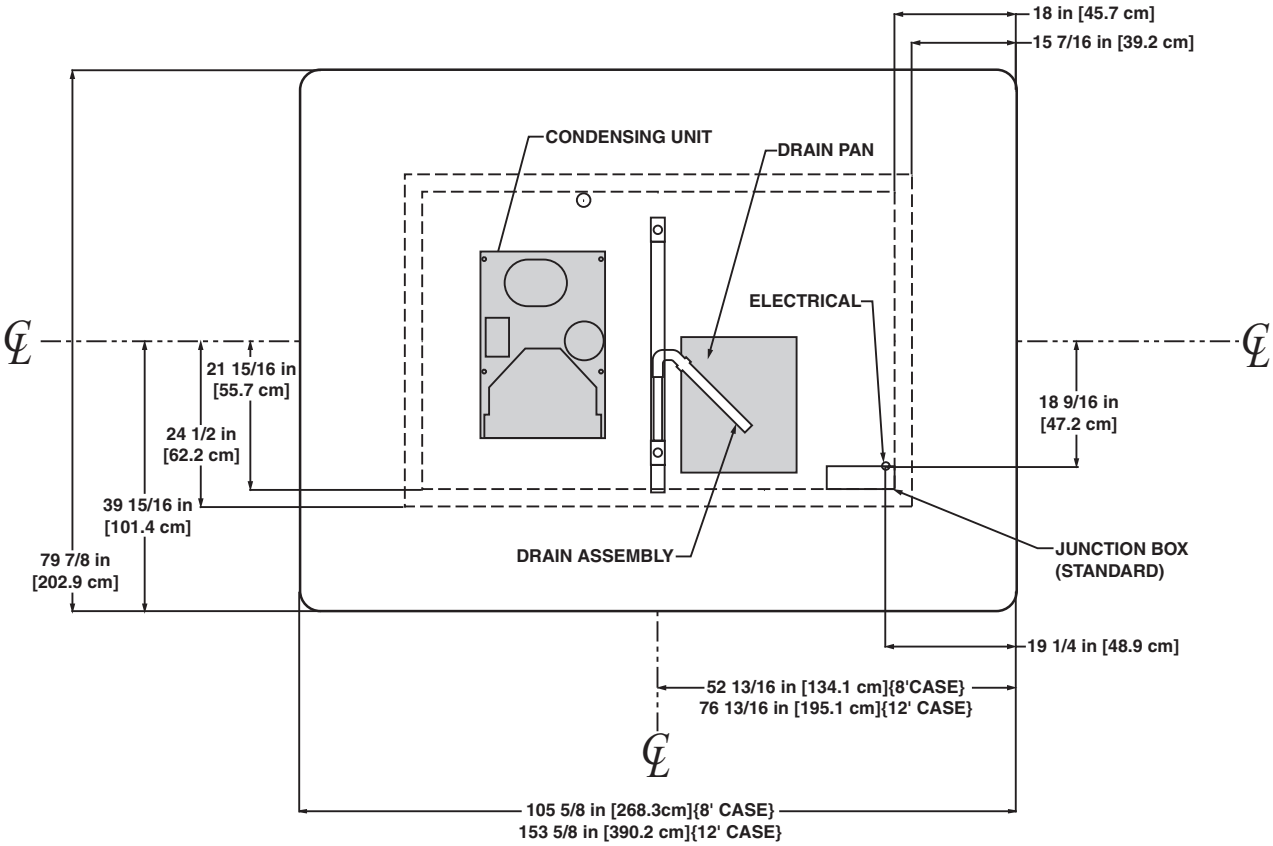

NOTES:

* STUB-UP AREA

Narrow Single Deck Frozen Food/Ice Cream Merchandiser

ONZ - 8′ & 12′

Electrical Data

Model		Fans per Case	Standard Fans 120 Volts Amps	Standard Fans 120 Volts Watts	High Efficiency Fans 120 Volts Amps	High Efficiency Fans 120 Volts Watts	Anti-Condensate Heaters 120 Volts Amps	Anti-Condensate Heaters 120 Volts Watts	Defrost Heaters 208 Volts Amps	Defrost Heaters 208 Volts Watts	Defrost Heaters 240 Volts Amps	Defrost Heaters 240 Volts Watts	Drain Heaters 120 Volts Amps	Drain Heaters 120 Volts Watts
ONZ	F-8′[1]	3	1.02	51	0.45	33	1.93	232	7.69	1600	8.88	2130	0.13	15
	F-12′	4	1.36	68	0.60	44	2.70	324	11.54	2400	13.31	3195	0.13	15
	C-8′	3	1.02	51	0.45	33	1.93	232	15.38	3200	17.75	4260	0.13	15
	C-12′	4	1.36	68	0.60	44	2.70	324	23.08	4800	26.63	6390	0.13	15

[1] F = frozen food, C = ice cream.

Lighting Data

Model		Typical per Light Row 120 Volts Amps	Typical per Light Row 120 Volts Watts	Maximum Lighting 120 Volts Amps	Maximum Lighting 120 Volts Watts
ONZ	8′	- - -[2]	- - -	- - -	- - -
	12′	- - -	- - -	- - -	- - -

[2] NOTE: - - - not an option on this case model.

Guidelines & Control Settings

Model	BTUH/ft[3]	Evaporator (°F)	Superheat Set Point @ Bulb (°F)	Discharge Air (°F)	Return Air (°F)	Discharge Air Velocity[4] (FPM)
ONZ - F	440	-12	3-5	-2	7	393
ONZ - C	500	-22	3-5	-13	-3	400

[3] BTUHs/ft listed are for parallel operation. Conventional ratings may be approximated by multiplying listed rating by 1.04.

[4] Average discharge air velocity at peak of defrost.

Defrost Controls

Model	Defrosts Per Day	Run-Off Time (min)	Electric Defrost Fail-safe (min)	Electric Defrost Termination Temp. (°F)	Timed Off Defrost Fail-safe (min)	Timed Off Defrost Termination Temp. (°F)	Hot Gas Defrost Fail-safe (min)	Hot Gas Defrost Termination Temp. (°F)	Reverse Air Defrost Fail-safe (min)	Reverse Air Defrost Termination Temp. (°F)
ONZ	2	13 - 15	35	47	- - -	- - -	20	60	- - -	- - -

Low Temperature Defrost Schedule

No. Per Day	Hours
1	10 pm
2	6 am - 10 pm**

All measurements are taken per ARI 1200 - 2002 specifications.

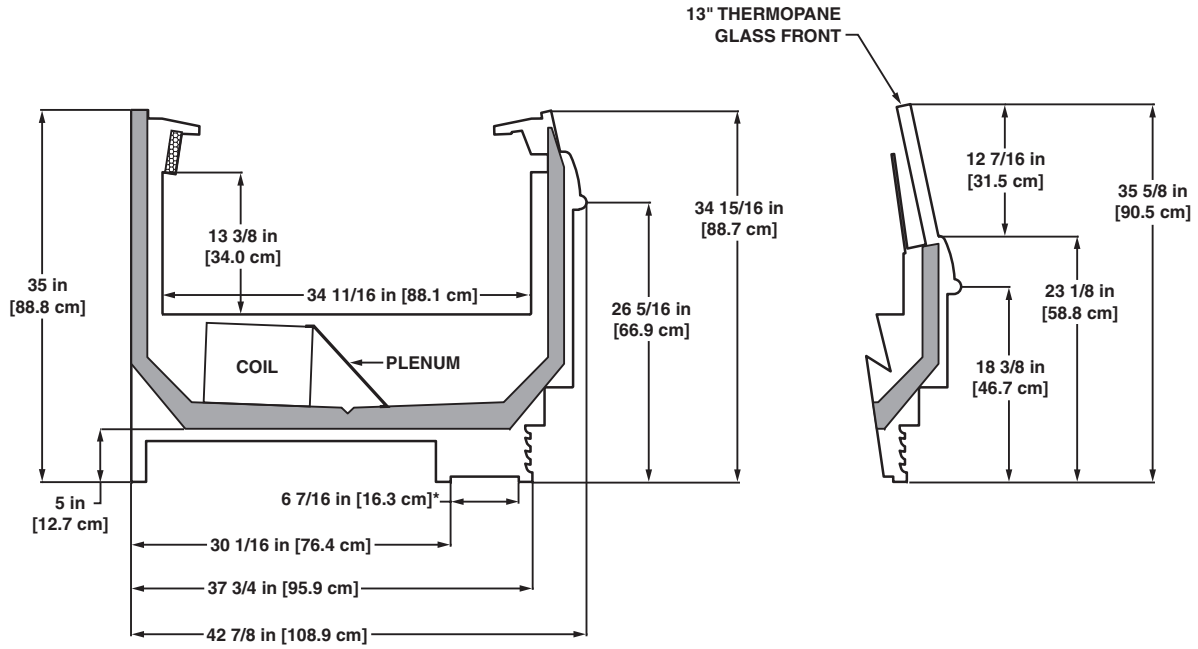

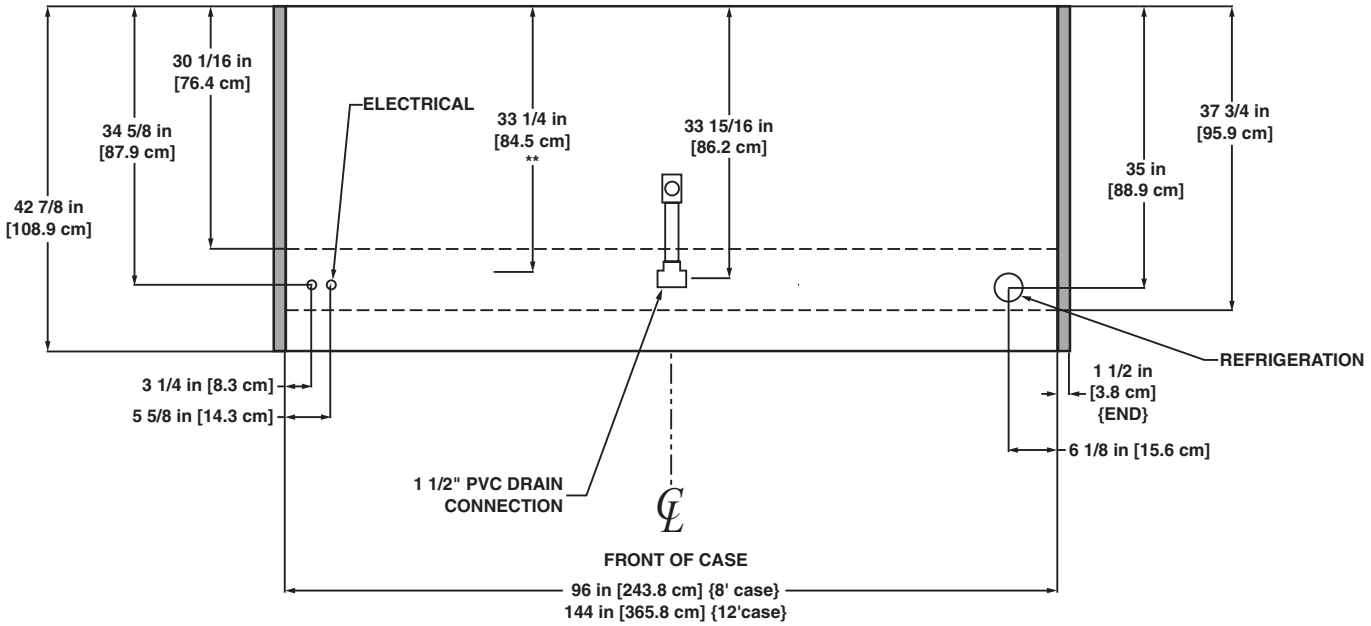

NOTES:

* STUB-UP AREA
** RECOMMENDED STUB-UP CENTERLINE FOR ELECTRICAL AND HUB DRAINS

- FRONT AND REAR SILL HEIGHTS VARY WITH BASEFRAME HEIGHT
- ENDS ADD APPROXIMATELY 1 INCH TO CASE HEIGHT
- SUCTION LINE - 7/8", LIQUID LINE - 3/8"

Narrow Island Frozen Food/Ice Cream Merchandiser

ONIZ - 6′, 8′, 10′ & 12′

Electrical Data

Model		Fans per Case	Standard Fans 120 Volts Amps	Standard Fans 120 Volts Watts	High Efficiency Fans 120 Volts Amps	High Efficiency Fans 120 Volts Watts	Defrost Heaters 208 Volts Amps	Defrost Heaters 208 Volts Watts	Defrost Heaters 240 Volts Amps	Defrost Heaters 240 Volts Watts	Drain Heaters 120 Volts Amps	Drain Heaters 120 Volts Watts
ONIZ	F-6′[1]	2	0.68	34	0.30	22	5.77	1200	6.66	1598	0.13	15
	F-8′	3	1.02	51	0.45	33	7.69	1600	8.88	2130	0.13	15
	F-10′	3	1.02	51	0.45	33	9.62	2000	11.10	2663	0.13	15
	F-12′	4	1.36	68	0.60	44	11.54	2400	13.31	3195	0.13	15
	C-6′[1]	2	0.68	34	0.30	22	11.54	2400	13.32	3196	0.13	15
	C-8′	3	1.02	51	0.45	33	15.38	3200	17.75	4260	0.13	15
	C-10′	3	1.02	51	0.45	33	16.13	3355	18.65	4476	0.13	15
	C-12′	4	1.36	68	0.60	44	23.08	4800	26.63	6390	0.13	15

[1] F = Frozen food, C = Ice cream.

Lighting Data

Model	Typical per Light Row 120 Volts Amps	Typical per Light Row 120 Volts Watts	Maximum Lighting 120 Volts Amps	Maximum Lighting 120 Volts Watts
ONIZ-6′	- - -[2]	- - -	- - -	- - -
ONIZ-8′	- - -	- - -	- - -	- - -
ONIZ-10′	- - -	- - -	- - -	- - -
ONIZ-12′	- - -	- - -	- - -	- - -

[2] NOTE: - - - not an option of this case model.

Anti-Condensate Heater Data

Model	Solid Front 120 Volts Amps	Solid Front 120 Volts Watts	Solid Front[3] Glass Cap 120 Volts Amps	Solid Front[3] Glass Cap 120 Volts Watts	Solid Wrap[4] End 120 Volts Amps	Solid Wrap[4] End 120 Volts Watts	Glass Front 120 Volts Amps	Glass Front 120 Volts Watts	Glass Front[3] Glass Cap 120 Volts Amps	Glass Front[3] Glass Cap 120 Volts Watts	Glass Wrap[4] End 120 Volts Amps	Glass Wrap[4] End 120 Volts Watts
ONIZ-6′	0.91	109	0.42	50	0.26	31	1.69	203	0.37	44	0.57	68
ONIZ-8′	0.86	103	0.90	108	0.26	31	1.66	199	0.42	50	0.57	68
ONIZ-10′	1.00	120	1.20	144	0.26	31	1.95	234	0.62	74	0.57	68
ONIZ-12′	1.27	152	1.42	170	0.26	31	2.35	282	0.74	89	0.57	68

[3] Glass cap heater for stainless steel glass cap option only.

[4] Data given for one glass wrap-around end.

Guidelines & Control Settings

Model	BTUH/ft[5]	Evaporator (°F)	Superheat Set Point @ Bulb (°F)	Discharge Air (°F)	Return Air (°F)	Discharge Air Velocity[6] (FPM)
ONIZ-F	440	-12	3-5	-2	7	393
ONIZ-C	500	-22	3-5	-13	-3	400

[5] BTUHs/ft listed are for parallel operation. Conventional ratings may be approximated by multiplying listed rating by 1.04.

[6] Average discharge air velocity at peak of defrost.

Defrost Controls

Model	Defrosts Per Day	Run-Off Time (min)	Electric Defrost Fail-safe (min)	Electric Defrost Termination Temp. (°F)	Timed Off Defrost Fail-safe (min)	Timed Off Defrost Termination Temp. (°F)	Hot Gas Defrost Fail-safe (min)	Hot Gas Defrost Termination Temp. (°F)	Reverse Air Defrost Fail-safe (min)	Reverse Air Defrost Termination Temp. (°F)
ONIZ	2	13 - 15	35	47	- - -	- - -	20	60	- - -	- - -

Low Temperature Defrost Schedule

No. Per Day	Hours
1	10 pm
2	6 am - 10 pm**

All measurements are taken per ARI 1200 - 2002 specifications.

NSF COMPONENT

c UL us

Hill PHOENIX EXCELLENCE

A DOVER COMPANY

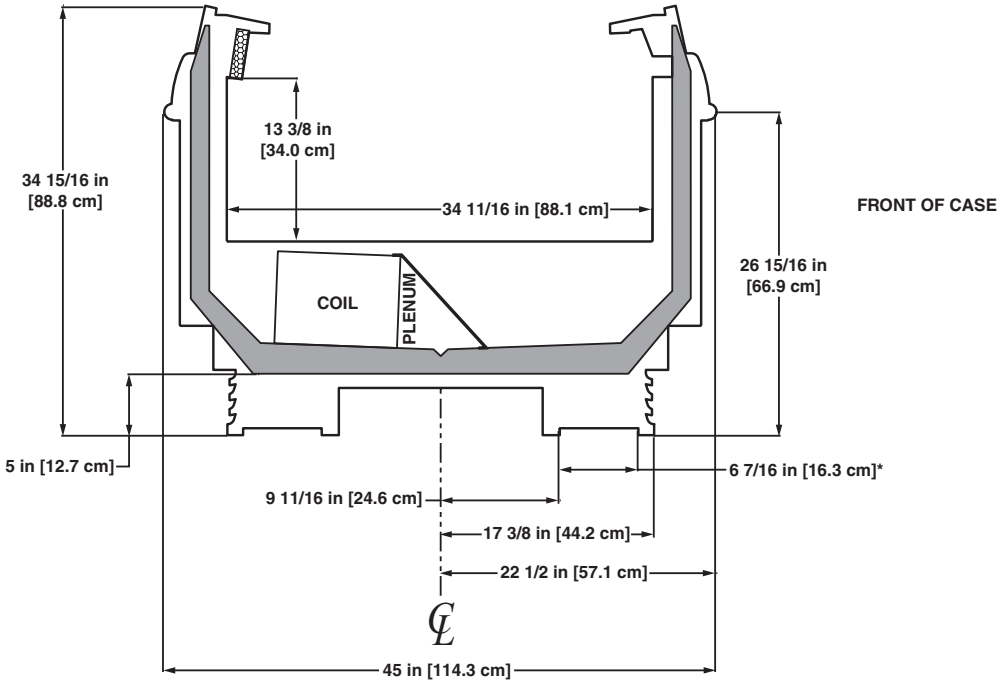

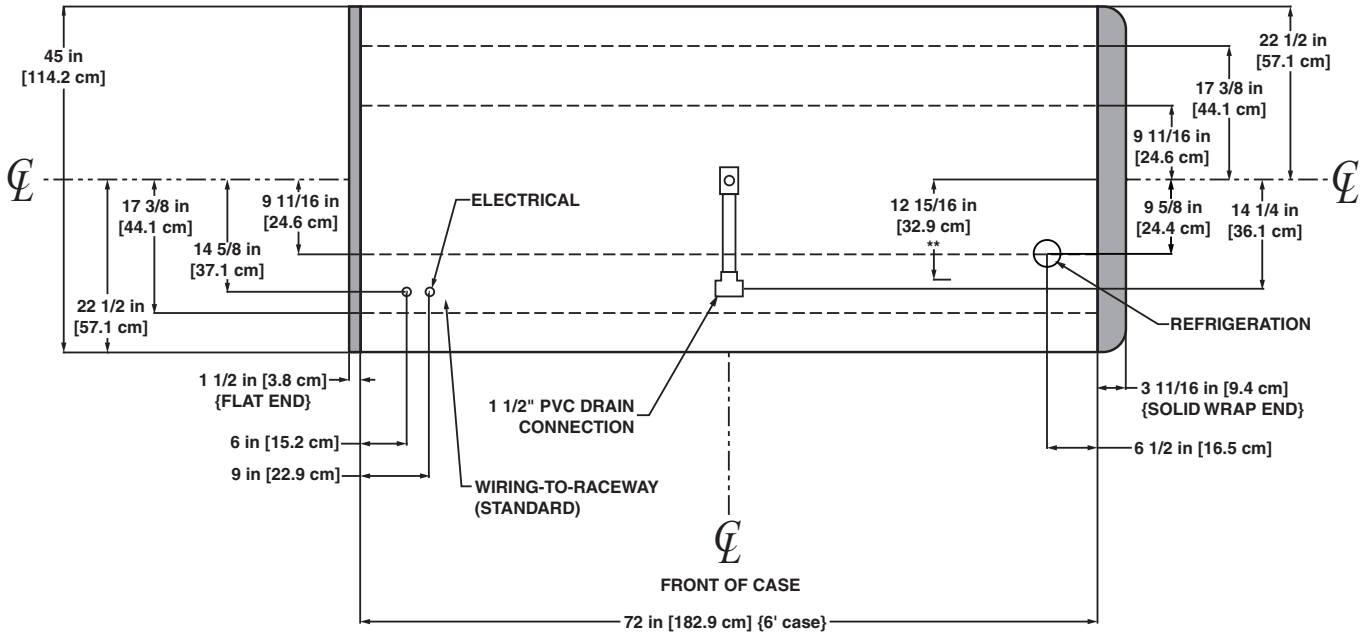

NOTES:

* STUB-UP AREA
** RECOMMENDED STUB-UP CENTERLINE FOR ELECTRICAL AND HUB DRAINS

• SUCTION LINE - 7/8", LIQUID LINE - 3/8"

ONIZ
(THERMOPANE GLASS FRONT)

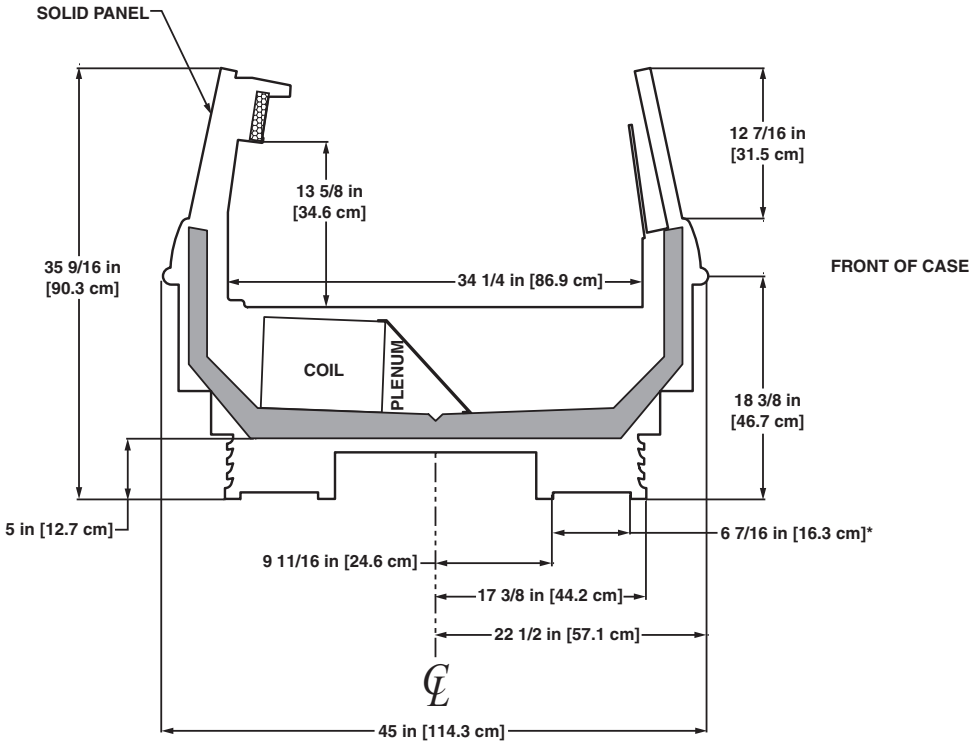

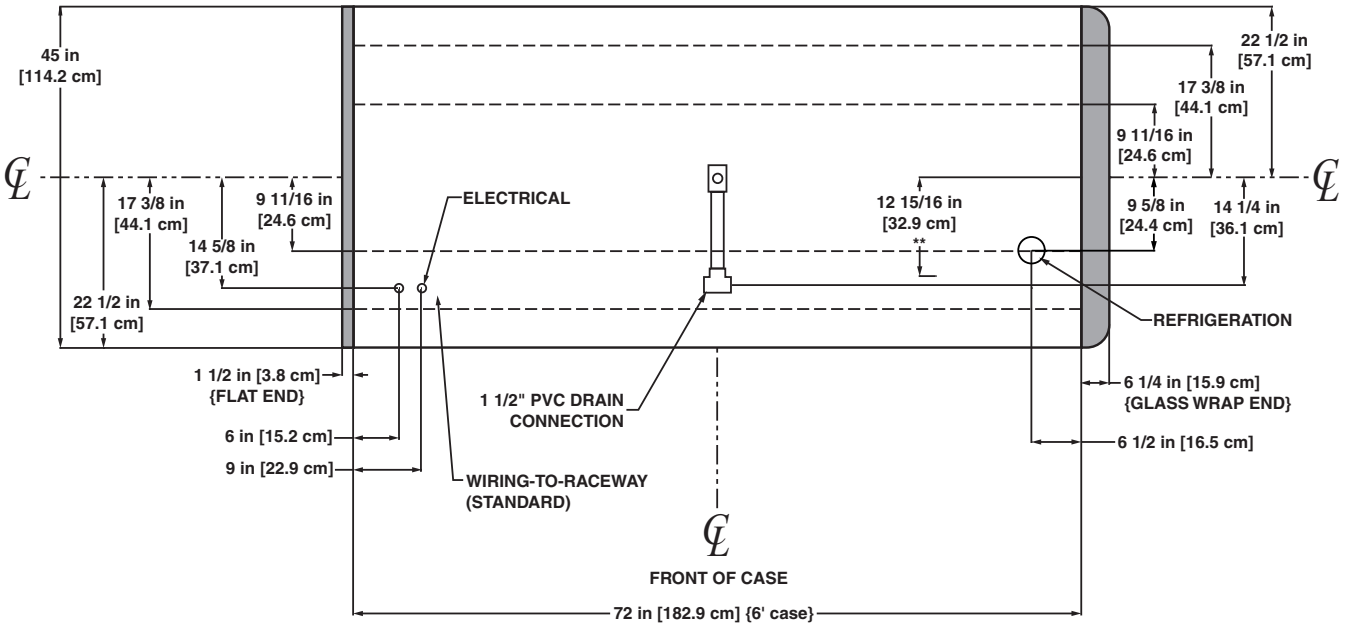

NOTES:

* STUB-UP AREA
** RECOMMENDED STUB-UP CENTERLINE FOR ELECTRICAL AND HUB DRAINS

• SUCTION LINE - 7/8", LIQUID LINE - 3/8"

NSF COMPONENT

A DOVER COMPANY

Narrow Island Frozen Food Merchandiser

ONIZGG - 8′ & 12′

Electrical Data

Model		Fans per Case	Standard Fans 120 Volts Amps	Standard Fans 120 Volts Watts	High Efficiency Fans 120 Volts Amps	High Efficiency Fans 120 Volts Watts	Anti-Condensate Heaters 120 Volts Amps	Anti-Condensate Heaters 120 Volts Watts	Defrost Heaters 208 Volts Amps	Defrost Heaters 208 Volts Watts	Defrost Heaters 240 Volts Amps	Defrost Heaters 240 Volts Watts	Drain Heaters 120 Volts Amps	Drain Heaters 120 Volts Watts
ONIZGG	F-8′[1]	3	1.02	51	0.45	33	2.54	305	7.69	1600	8.88	2130	0.13	15
	F-12′	4	1.36	68	0.60	44	1.87	224	11.54	2400	13.31	3195	0.13	15

[1] F = Frozen food

Lighting Data

Model		Typical per Light Row 120 Volts Amps	Typical per Light Row 120 Volts Watts	Maximum Lighting 120 Volts Amps	Maximum Lighting 120 Volts Watts
ONIZGG	8′	- - -[2]	- - -	- - -	- - -
	12′	- - -	- - -	- - -	- - -

[2] NOTE: - - - not an option on this case model.

Guidelines & Control Settings

Model	BTUH/ft[3]	Evaporator (°F)	Superheat Set Point @ Bulb (°F)	Discharge Air (°F)	Return Air (°F)	Discharge Air Velocity[4] (FPM)
ONIZGG-F	530	-22	3-5	-10	2	255

[3] BTUHs/ft listed are for parallel operation. Conventional ratings may be approximated by multiplying listed rating by 1.04.

[4] Average discharge air velocity at peak of defrost.

Defrost Controls

Model	Defrosts Per Day	Run-Off Time (min)	Electric Defrost Fail-safe (min)	Electric Defrost Termination Temp. (°F)	Timed Off Defrost Fail-safe (min)	Timed Off Defrost Termination Temp. (°F)	Hot Gas Defrost Fail-safe (min)	Hot Gas Defrost Termination Temp. (°F)	Reverse Air Defrost Fail-safe (min)	Reverse Air Defrost Termination Temp. (°F)
ONIZGG	2	13 - 15	35	47	- - -	- - -	20	60	- - -	- - -

Low Temperature Defrost Schedule

No. Per Day	Hours
1	10 pm
2	6 am - 10 pm**

All measurements are taken per ARI 1200 - 2002 specifications.

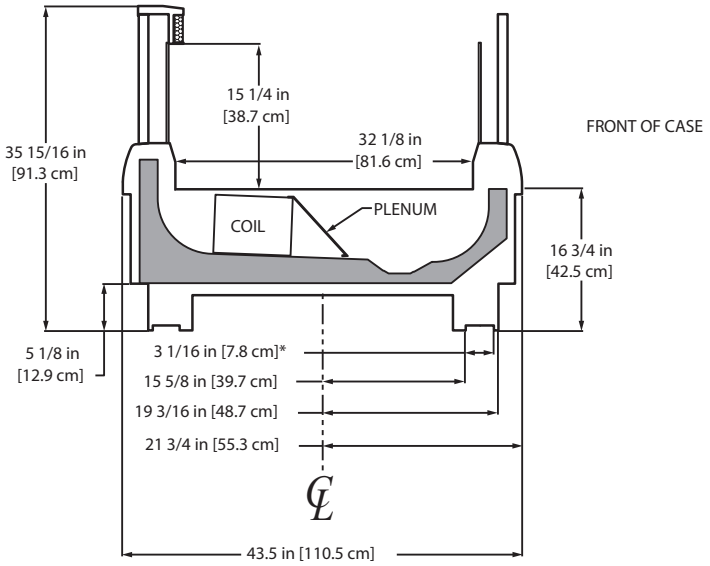

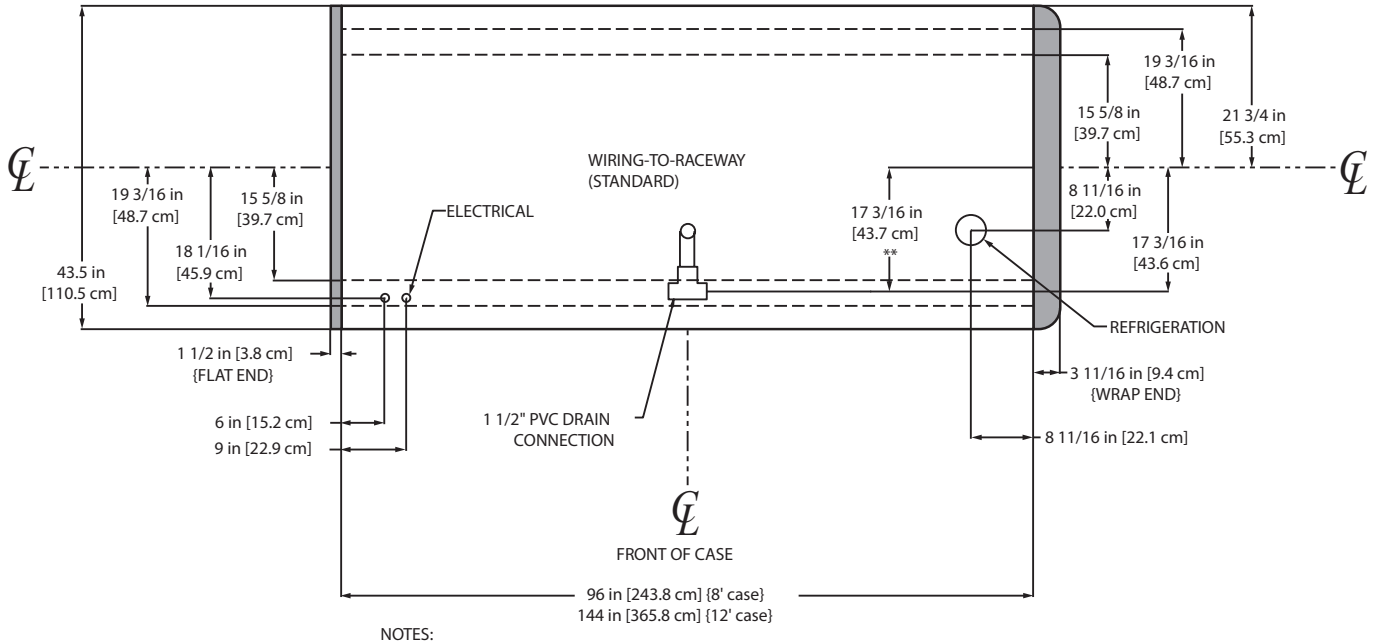

NOTES:

* STUB-UP AREA
** RECOMMENDED STUB-UP CENTERLINE FOR ELECTRICAL AND HUB DRAINS

• SUCTION LINE - 7/8", LIQUID LINE - 1/2"

Island Frozen Food Merchandiser

OIZ - 8′ & 12′

Electrical Data

Model		Fans per Case	Standard Fans 120 Volts Amps	Standard Fans 120 Volts Watts	High Efficiency Fans 120 Volts Amps	High Efficiency Fans 120 Volts Watts	Anti-Condensate Heaters 120 Volts Amps	Anti-Condensate Heaters 120 Volts Watts	Defrost Heaters 208 Volts Amps	Defrost Heaters 208 Volts Watts	Defrost Heaters 240 Volts Amps	Defrost Heaters 240 Volts Watts	Drain Heaters 120 Volts Amps	Drain Heaters 120 Volts Watts
OIZ	8′	3	1.02	51	0.45	33	3.14	377	7.69	1600	8.88	2130	0.13	15
	12′	4	1.36	68	0.60	44	3.97	476	11.54	2400	13.31	3195	0.13	15

Lighting Data

Model		Typical per Light Row 120 Volts Amps	Typical per Light Row 120 Volts Watts	Maximum Lighting 120 Volts Amps	Maximum Lighting 120 Volts Watts
OIZ	8′	- - -[1]	- - -	- - -	- - -
	12′	- - -	- - -	- - -	- - -

[1] NOTE: - - - not an option on this case model.

Guidelines & Control Settings

Model	BTUH/ft[2]	Evaporator (°F)	Superheat Set Point @ Bulb (°F)	Discharge Air (°F)	Return Air (°F)	Discharge Air Velocity[3] (FPM)
OIZ[4]	520	-22	3-5	-12	-4	200

[2] BTUHs/ft listed are for parallel operation. Conventional ratings may be approximated by multiplying listed rating by 1.04.

[3] Average discharge air velocity at peak of defrost.

[4] Not intended for Frozen Juice application

Defrost Controls

Model	Defrosts Per Day	Run-Off Time (min)	Electric Defrost Fail-safe (min)	Electric Defrost Termination Temp. (°F)	Timed Off Defrost Fail-safe (min)	Timed Off Defrost Termination Temp. (°F)	Hot Gas Defrost Fail-safe (min)	Hot Gas Defrost Termination Temp. (°F)	Reverse Air Defrost Fail-safe (min)	Reverse Air Defrost Termination Temp. (°F)
OIZ	1	13 - 15	45	47	- - -	- - -	20	60	- - -	- - -

Low Temperature Defrost Schedule

No. Per Day	Hours
1	10 pm
2	6 am - 10 pm**

All measurements are taken per ARI 1200 - 2002 specifications.

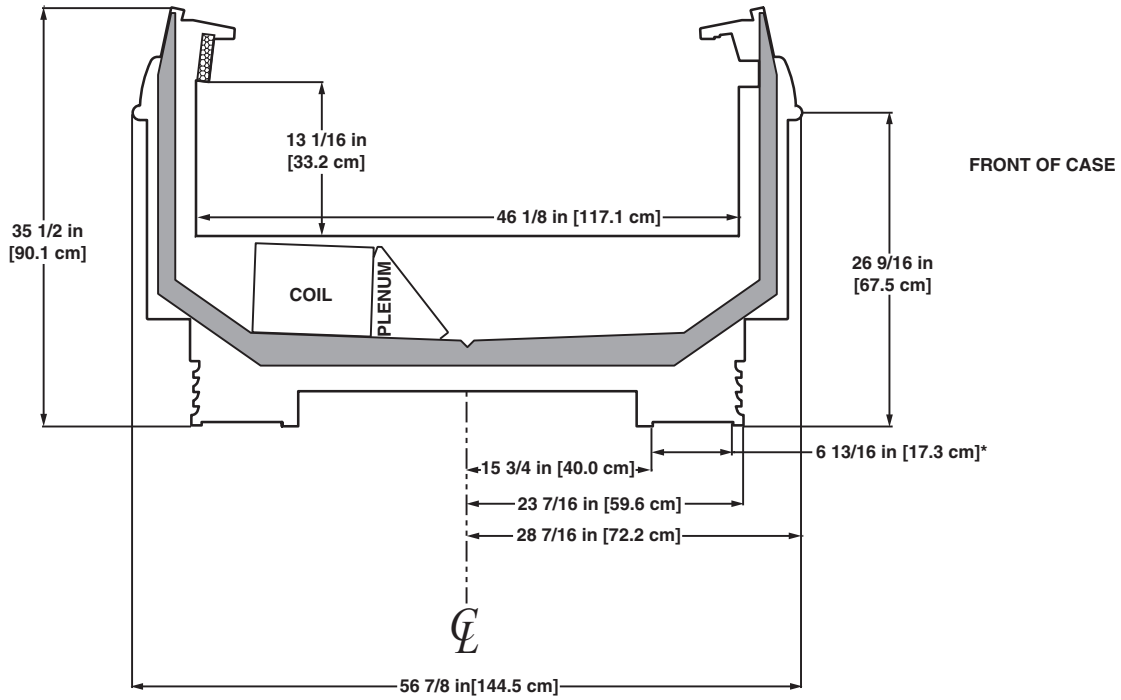

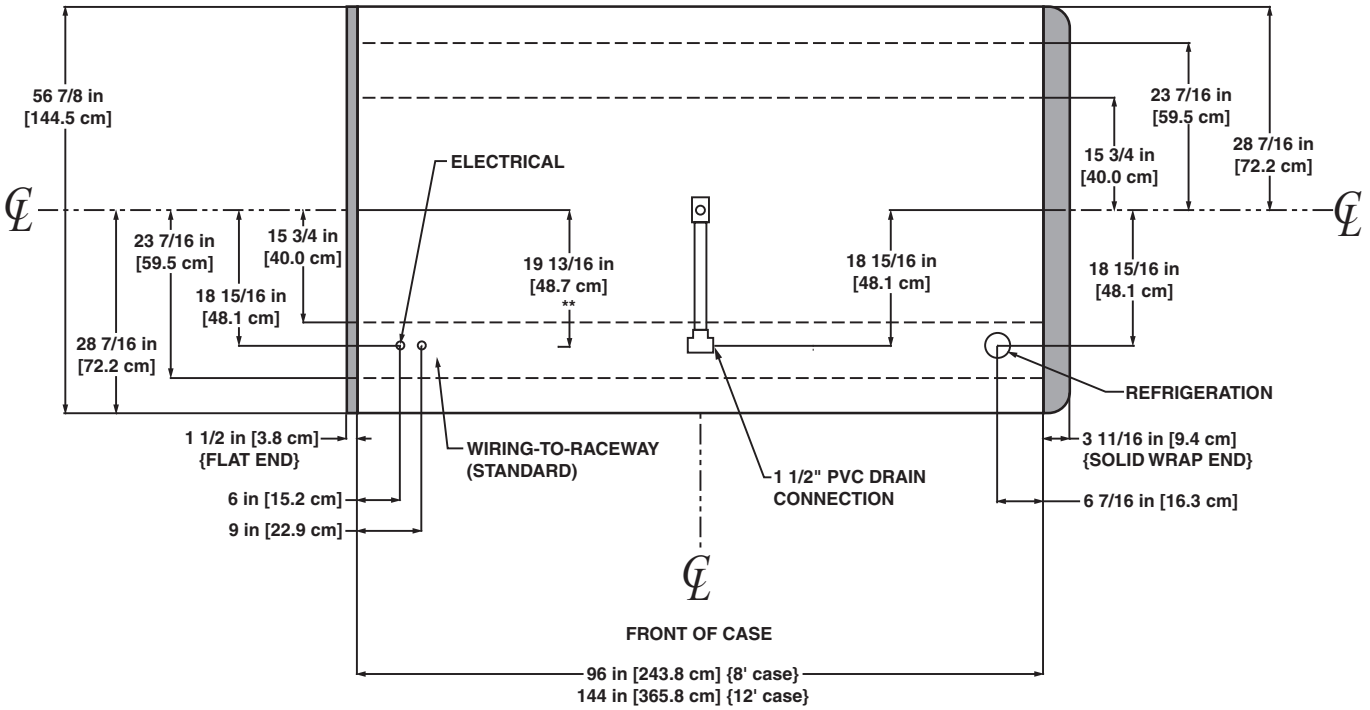

NOTES:

* STUB-UP AREA
** RECOMMENDED STUB-UP CENTERLINE FOR ELECTRICAL AND HUB DRAINS

• SUCTION LINE - 7/8", LIQUID LINE - 3/8"

NSF COMPONENT c UL us

A DOVER COMPANY

Wide Island Frozen Food/Ice Cream Merchandiser

OWIZ - 8′ & 12′

Electrical Data

Model		Fans per Case	Standard Fan 120 Volts Amps	Standard Fan 120 Volts Watts	High Efficiency Fans 120 Volts Amps	High Efficiency Fans 120 Volts Watts	Defrost Heaters 208 Volts Amps	Defrost Heaters 208 Volts Watts	Defrost Heaters 240 Volts Amps	Defrost Heaters 240 Volts Watts	Drain Heaters 120 Volts Amps	Drain Heaters 120 Volts Watts
OWIZ	F-8′[1]	4	1.36	68	0.60	44	7.69[2]	1600	8.88[2]	2130	0.26	30
	F-12′	6	2.04	102	0.90	66	11.54[2]	2400	13.31[2]	3195	0.26	30
	C-8′	4	1.36	68	0.60	44	11.54[2]	2400	13.31[2]	3195	0.26	30
	C-12′	6	2.04	102	0.90	66	17.31[2]	3600	19.98[2]	4795	0.26	30

[1] F = frozen food, C = ice cream.

[2] Defrost data for one side of case only.

Lighting Data[3]

Model	Typical per Light Row 120 Volts Amps	Typical per Light Row 120 Volts Watts	Maximum Lighting 120 Volts Amps	Maximum Lighting 120 Volts Watts
OWIZ-8′	NA[4]	NA	5.20	624
OWIZ-12′	NA	NA	7.48	898

[3] Lighting is for cases with superstructures.

[4] Not applicable.

Anti-Condensate Heater Data

Model	Solid[5] Front 120 Volts Amps	Solid[5] Front 120 Volts Watts	Glass Front 120 Volts Amps	Glass Front 120 Volts Watts	Glass[6] Cap 120 Volts Amps	Glass[6] Cap 120 Volts Watts	Glass Wrap[7] End 120 Volts Amps	Glass Wrap[7] End 120 Volts Watts	Super Structure 120 Volts Amps	Super Structure 120 Volts Watts
OWIZ-8′	2.62	314	3.02	362	0.50	60	0.68	82	0.50	60
OWIZ-12′	3.96	475	4.38	526	0.74	89	0.68	82	0.76	91

[5] Solid wrap-around ends have no anti-condensate heaters.

[6] Glass cap heater for stainless steel glass cap option only.

[7] Data given for one glass wrap-around end.

Guidelines & Control Settings

Model	BTUH/ft[8]	Coil Type	Evaporator (°F)	Superheat Set Point @ Bulb (°F)	Discharge Air (°F)	Return Air (°F)	Discharge Air Velocity[9] (FPM)
OWIZ - F	635	Enh.	-12	3-5	-6	0	180
OWIZ - C	740	Enh.	-22	3-5	-16	-10	180

[8] BTUHs/ft listed are for parallel operation. Conventional ratings may be approximated by multiplying listed rating by 1.04. BTUHs/ft listed are for both sides of the case.

[9] Average discharge air velocity at peak of defrost.

Defrost Controls

Model	Defrosts Per Day	Run-Off Time (min)	Electric Defrost Fail-safe (min)	Electric Defrost Termination Temp. (°F)	Timed Off Defrost Fail-safe (min)	Timed Off Defrost Termination Temp. (°F)	Hot Gas Defrost Fail-safe (min)	Hot Gas Defrost Termination Temp. (°F)	Reverse Air Defrost Fail-safe (min)	Reverse Air Defrost Termination Temp. (°F)
OWIZ	1	13 - 15	60	49	- - -[10]	- - -	20	60	- - -	- - -

[10] NOTE: - - - not an option on this case model.

Low Temperature Defrost Schedule

No. Per Day	Hours
1	10 pm
2	6 am - 10 pm**

All measurements are taken per ARI 1200 - 2002 specifications.

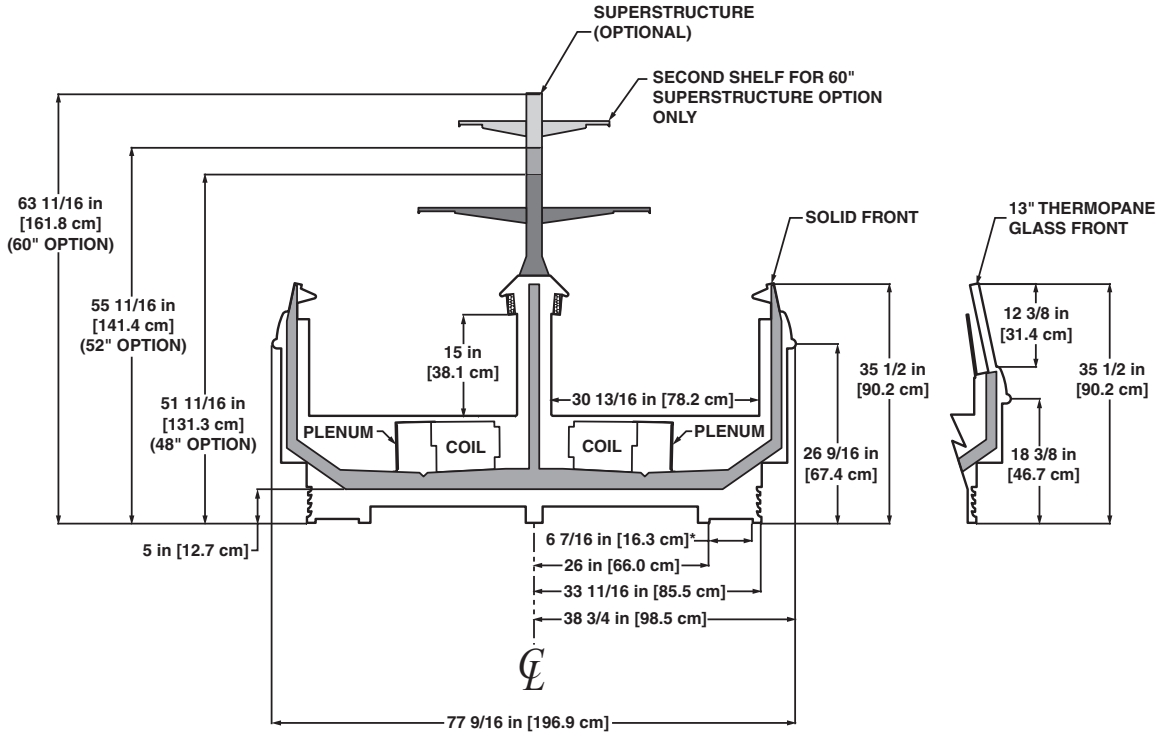

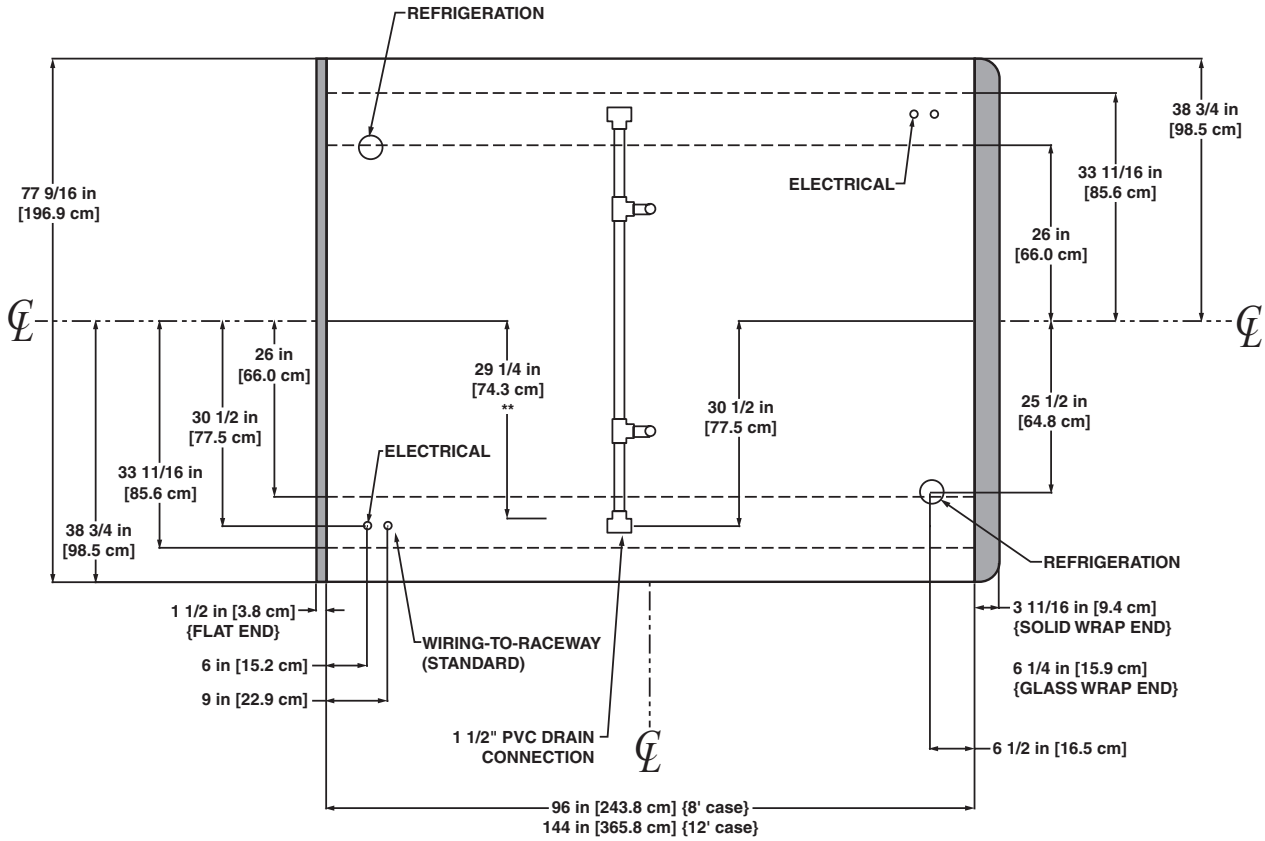

NOTES:

* STUB-UP AREA
** RECOMMENDED STUB-UP CENTERLINE FOR ELECTRICAL AND HUB DRAINS

- SUCTION LINE - 7/8", LIQUID LINE - 3/8"
- AVAILABLE SHELF SIZES: 10", 12", 14", & 16"

Wide Island End Cap Frozen Food/Ice Cream Merchandiser

OWEZ

Electrical Data

Model		Fans per Case	Standard Fan 120 Volts Amps	Standard Fan 120 Volts Watts	High Efficiency Fans 120 Volts Amps	High Efficiency Fans 120 Volts Watts	Defrost Heaters 208 Volts Amps	Defrost Heaters 208 Volts Watts	Defrost Heaters 240 Volts Amps	Defrost Heaters 240 Volts Watts	Drain Heaters 120 Volts Amps	Drain Heaters 120 Volts Watts
OWEZ	F[1]	2	0.68	34	0.30	22	5.77	1200	6.65	1596	0.13	15
	C	2	0.68	34	0.30	22	8.65	1800	9.98	2394	0.13	15

[1] F = Frozen food, C = Ice cream

Lighting Data

Model	Typical per Light Row 120 Volts Amps	Typical per Light Row 120 Volts Watts	Maximum Lighting 120 Volts Amps	Maximum Lighting 120 Volts Watts
OWEZ	- - -[2]	- - -	- - -	- - -

[2] NOTE: - - - not an option on this case model.

Anti-Condensate Heater Data

Model	Solid Front 120 Volts Amps	Solid Front 120 Volts Watts	Glass Front 120 Volts Amps	Glass Front 120 Volts Watts	Glass[3] Cap 120 Volts Amps	Glass[3] Cap 120 Volts Watts
OWEZ	1.56	187	1.96	235	0.51	61

[3] Glass cap heater for stainless steel glass cap option only.

Guidelines & Control Settings

Model	BTUH/cs[4]	Coil Type	Evaporator (°F)	Superheat Set Point @ Bulb (°F)	Discharge Air (°F)	Return Air (°F)	Discharge Air Velocity[5] (FPM)
OWEZ - F	2855	Enh.	-12	3-5	-6	0	200
OWEZ - C	3490	Enh.	-22	3-5	-16	-10	200

[4] BTUHs/case listed are for parallel operation. Conventional ratings may be approximated by multiplying listed rating by 1.04.

[5] Average discharge air velocity at peak of defrost.

Defrost Controls

Model	Defrosts Per Day	Run-Off Time (min)	Electric Defrost Fail-safe (min)	Electric Defrost Termination Temp. (°F)	Timed Off Defrost Fail-safe (min)	Timed Off Defrost Termination Temp. (°F)	Hot Gas Defrost Fail-safe (min)	Hot Gas Defrost Termination Temp. (°F)	Reverse Air Defrost Fail-safe (min)	Reverse Air Defrost Termination Temp. (°F)
OWEZ	1	13 - 15	60	49	- - -	- - -	20	60	- - -	- - -

Low Temperature Defrost Schedule

No. Per Day	Hours
1	10 pm
2	6 am - 10 pm**

All measurements are taken per ARI 1200 - 2002 specifications.

6/07

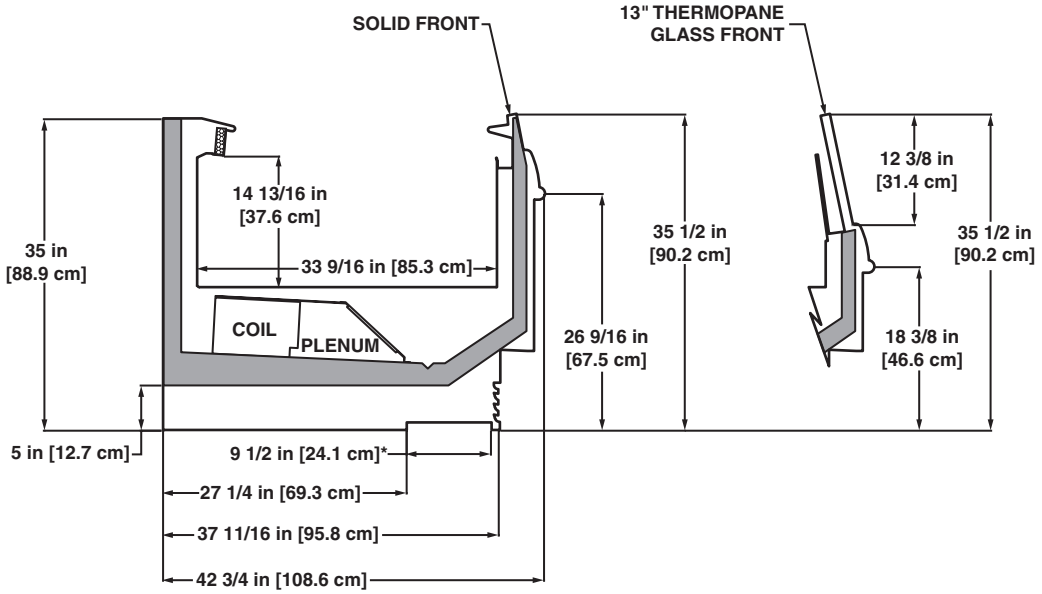

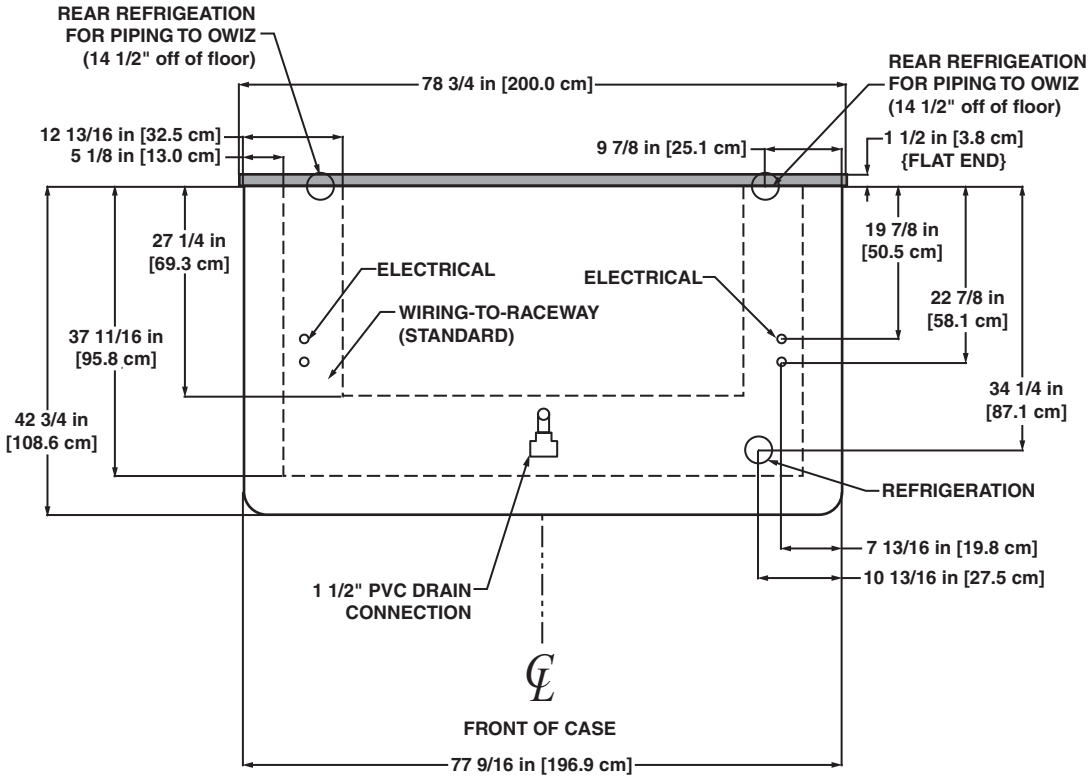

NOTES:

* STUB-UP AREA
** RECOMMENDED STUB-UP CENTERLINE FOR ELECTRICAL AND HUB DRAINS

• SUCTION LINE - 7/8", LIQUID LINE - 3/8"

MULTI-DECK ISLAND

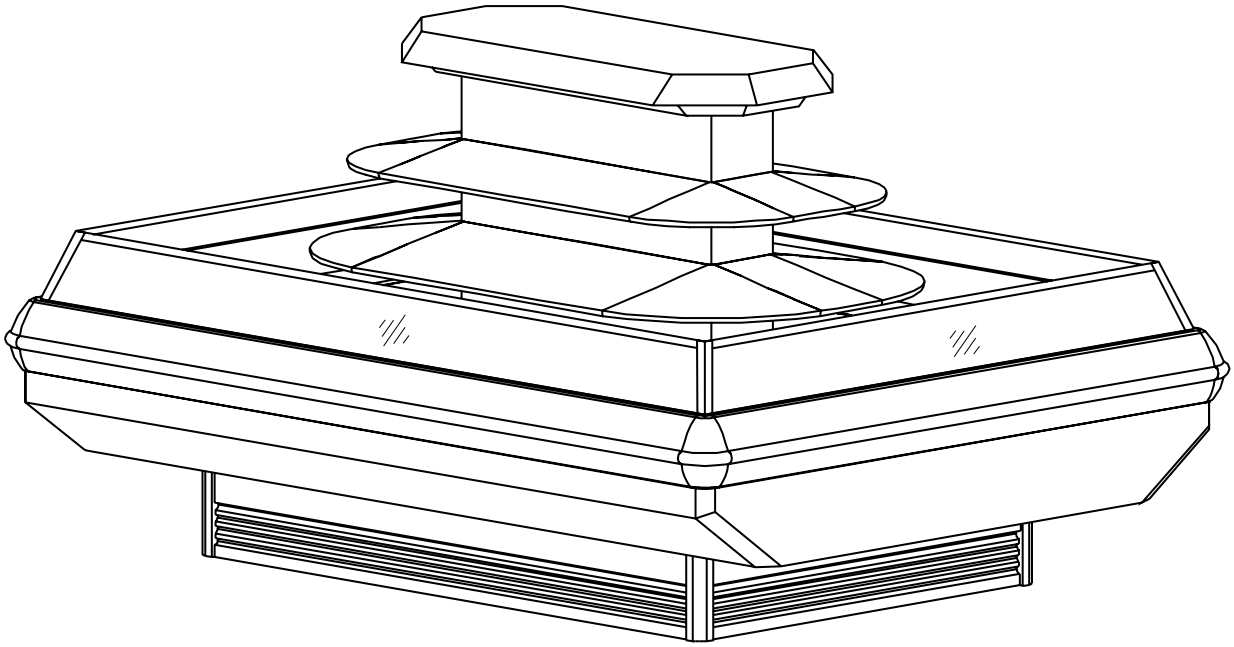

Notes:

- **Cases comply with ANSI / NSF* Standard 7. Units marked as components require remote refrigeration.**
- **Allow for an extra 1/8" per joint when lining up merchandisers.**
- **Front sill height does not affect case performance unless specifically shown.**
- **Front and rear sill heights vary with baseframe height.**

* ANSI - American National Standard Institute
NSF - National Sanitation Foundation

Wide Island Multi-Deck Deli/Meat Merchandiser

O2IM - 8′ double wraparound end

Electrical Data

Model		Fans per Case	Standard Fans 120 Volts Amps	Standard Fans 120 Volts Watts	High Efficiency Fans 120 Volts Amps	High Efficiency Fans 120 Volts Watts	Anti-Condensate Heaters 120 Volts Amps	Anti-Condensate Heaters 120 Volts Watts	Defrost Heaters 208 Volts Amps	Defrost Heaters 208 Volts Watts	Defrost Heaters 240 Volts Amps	Defrost Heaters 240 Volts Watts
O2IM	8′	6	3.00	180	0.46	27.6	0.67	80	7.70	1600	8.88	2130

Lighting Data

Model		Typical per Light Row 120 Volts Amps	Typical per Light Row 120 Volts Watts	Maximum Lighting 120 Volts Amps	Maximum Lighting 120 Volts Watts
O2IM	8′	NA[1]	NA	0.95	114

[1] Not applicable.

Guidelines & Control Settings

Model	Application	BTUH/ft[2]	Coil Type	Evaporator (°F)	Superheat Set Point @ Bulb (°F)	Discharge Air (°F)	Return Air (°F)	Discharge Air Velocity[4] (FPM)
O2IM	Meat	1340[3]	Enh.	17	6-8	26	38	270
	Deli	1230[3]	Enh.	22	6-8	30	40	270

[2] BTUHs/ft listed are for parallel operation. Conventional ratings may be approximated by multiplying listed rating by 1.04.

[3] High efficiency fans reduce refrigeration load by 96 BTUHs/fan.

[4] Average discharge air velocity at peak of defrost.

Defrost Controls

Model	Defrosts Per Day	Run-Off Time (min)	Electric Defrost Fail-safe (min)	Electric Defrost Termination Temp. (°F)	Timed Off Defrost Fail-safe (min)	Timed Off Defrost Termination Temp. (°F)	Hot Gas Defrost Fail-safe (min)	Hot Gas Defrost Termination Temp. (°F)	Reverse Air Defrost Fail-safe (min)	Reverse Air Defrost Termination Temp. (°F)
O2IM	4	6 - 8	30	47	45[5]	45[5]	26	45	- - -[6]	- - -

[5] Only recommended with the high efficiency coil at a 22°F evaporator.

[6] NOTE: - - - not an option on this case model.

Medium Temperature Defrost Schedule

No. Per Day	Hours
1	12 midnight
2	12 am - 12 pm
3	6 am - 2 pm - 10 pm
4	12 - 6 am - 12 - 6 pm

All measurements are taken per ARI 1200 - 2002 specifications.

NSF COMPONENT
c UL us
Hill PHOENIX EXCELLENCE
A DOVER COMPANY

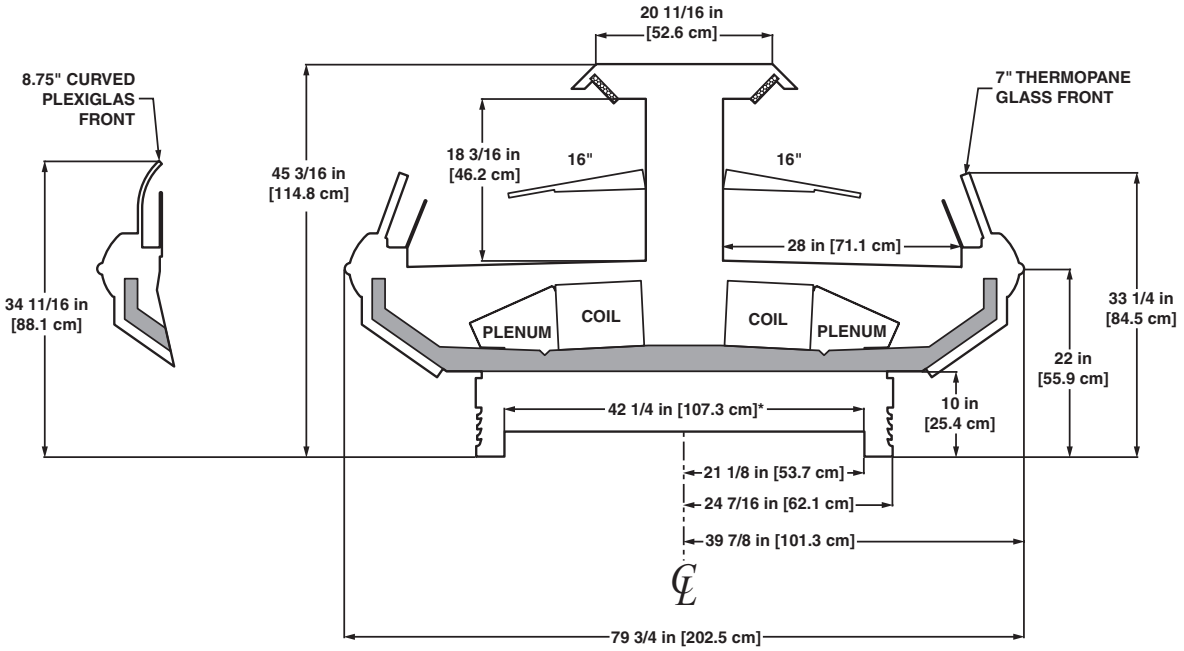

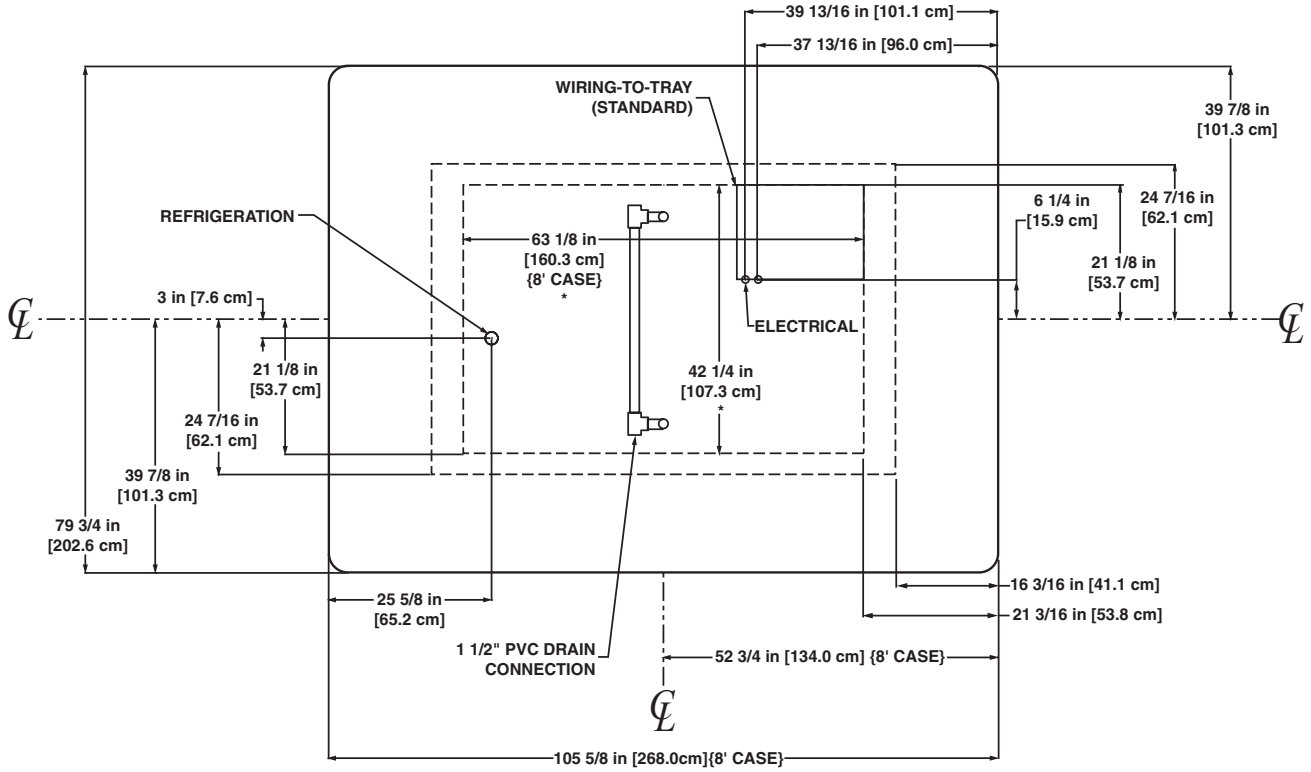

NOTES:

* STUB-UP AREA

- FRONT AND CENTER SILL HEIGHTS VARY WITH BASEFRAME HEIGHT
- SUCTION LINE - 7/8", LIQUID LINE - 3/8"
- AVAILABLE SHELF SIZES: 10", 12", 14" & 16"

Narrow Island Multi-Deck Deli/Meat Merchandiser

ON3IM - 8' & 12' double wraparound end

Electrical Data

Model		Fans per Case	Standard Fans 120 Volts Amps	Standard Fans 120 Volts Watts	High Efficiency Fans 120 Volts Amps	High Efficiency Fans 120 Volts Watts	Anti-Condensate Heaters 120 Volts Amps	Anti-Condensate Heaters 120 Volts Watts	Defrost Heaters 208 Volts Amps	Defrost Heaters 208 Volts Watts	Defrost Heaters 240 Volts Amps	Defrost Heaters 240 Volts Watts
ON3IM	8'	6	3.00	180	0.46	27.6	0.67	80	7.70	1600	8.88	2130
	12'	8	4.00	240	0.62	36.8	1.06	127	11.54	2400	13.32	3200

Lighting Data

Model		Typical per Light Row 120 Volts Amps	Typical per Light Row 120 Volts Watts	Maximum Lighting 120 Volts Amps	Maximum Lighting 120 Volts Watts
ON3IM	8'	NA[1]	NA	1.88	226
	12'	NA	NA	5.69	683

[1] Not applicable.

Guidelines & Control Settings

Model	Application	BTUH/ft[2]	Coil Type	Evaporator (°F)	Superheat Set Point @ Bulb (°F)	Discharge Air (°F)	Return Air (°F)	Discharge Air Velocity[4] (FPM)
ON3IM	Meat	1283	Enh.	17	6-8	26	38	270
	Deli	1179	Enh.	22	6-8	30	40	270

[2] BTUHs/ft listed are for parallel operation. Conventional ratings may be approximated by multiplying listed rating by 1.04.

[3] High efficiency fans reduce refrigeration load by 96 BTUHs/fan.

[4] Average discharge air velocity at peak of defrost.

Defrost Controls

Model	Defrosts Per Day	Run-Off Time (min)	Electric Defrost Fail-safe (min)	Electric Defrost Termination Temp. (°F)	Timed Off Defrost Fail-safe (min)	Timed Off Defrost Termination Temp. (°F)	Hot Gas Defrost Fail-safe (min)	Hot Gas Defrost Termination Temp. (°F)	Reverse Air Defrost Fail-safe (min)	Reverse Air Defrost Termination Temp. (°F)
ON3IM	4	6 - 8	30	47	45[5]	45[5]	26	45	- - -[6]	- - -

[5] Only recommended with the high efficiency coil at a 22°F evaporator.

[6] NOTE: - - - not an option on this case model.

Medium Temperature Defrost Schedule

No. Per Day	Hours
1	12 midnight
2	12 am - 12 pm
3	6 am - 2 pm - 10 pm
4	12 - 6 am - 12 - 6 pm

All measurements are taken per ARI 1200 - 2002 specifications.

6/07

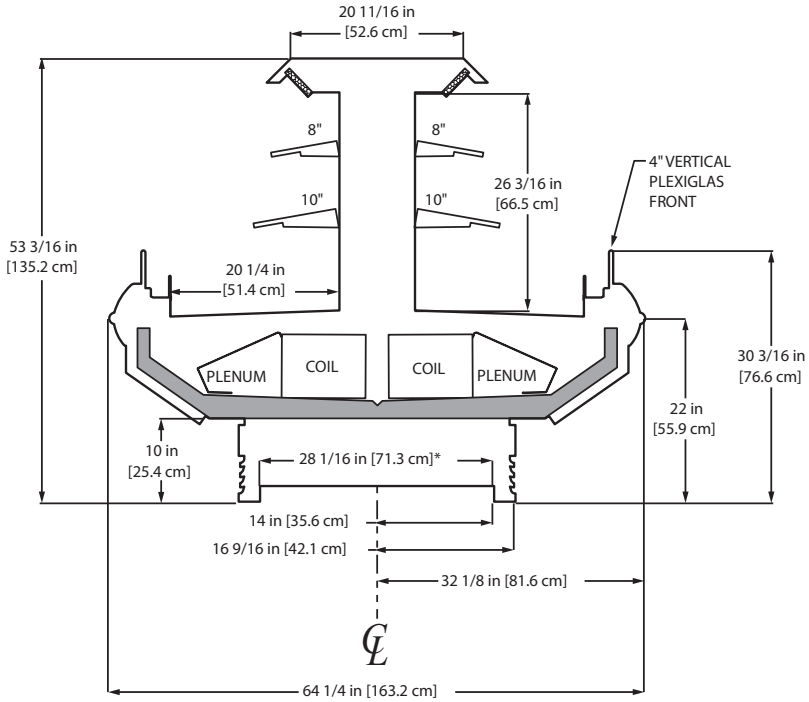

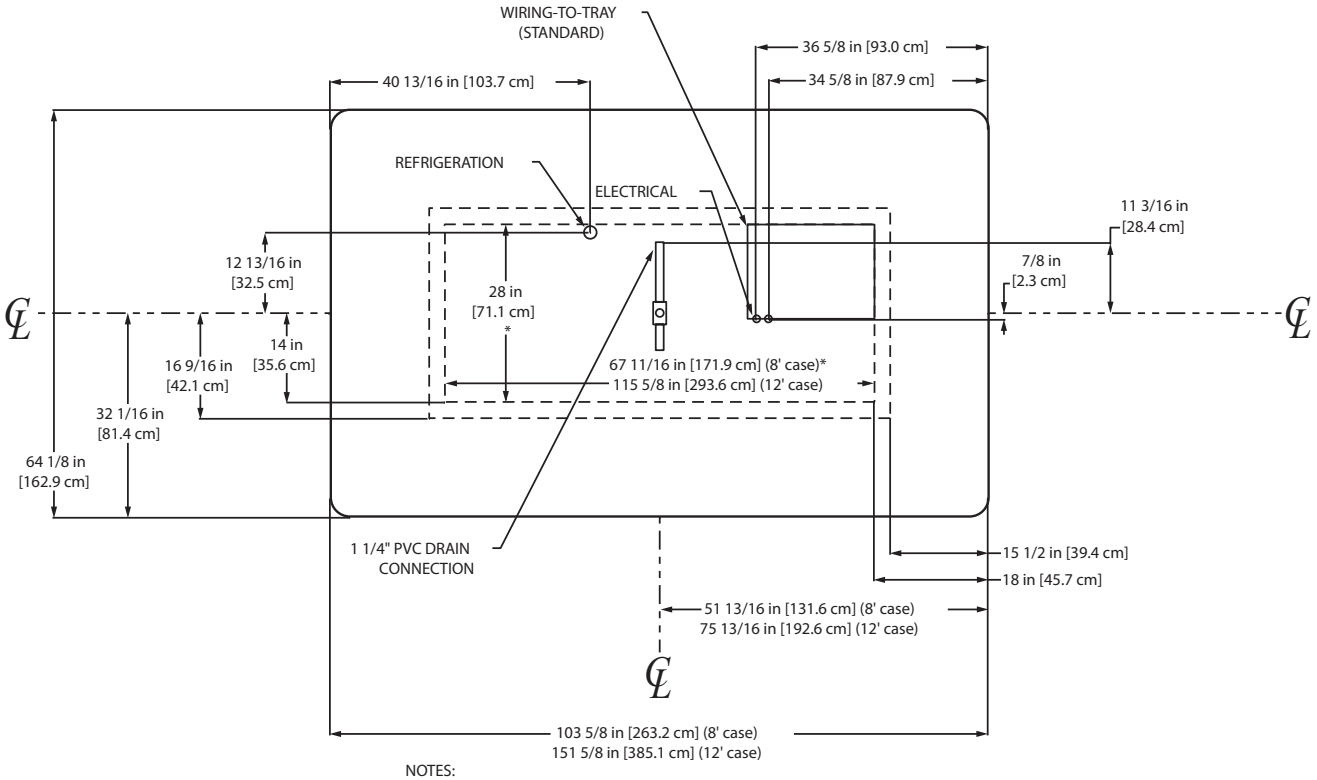

NOTES:

* STUB-UP AREA

- FRONT AND CENTER SILL HEIGHTS VARY WITH BASEFRAME HEIGHT
- SUCTION LINE - 7/8", LIQUID LINE - 3/8"
- AVAILABLE SHELF SIZES: 8", 10" & 12"

Wide Island Multi-Deck Deli/Meat Merchandiser

O3IM - 8′ & 12′ double wraparound end
O3IMB - 6′, 8′ & 12′ single wraparound end
O3IMBB - 8′ double joint end

Electrical Data

Model		Fans per Case	Standard Fans 120 Volts Amps	Standard Fans 120 Volts Watts	High Efficiency Fans 120 Volts Amps	High Efficiency Fans 120 Volts Watts	Anti-Condensate Heaters 120 Volts Amps	Anti-Condensate Heaters 120 Volts Watts	Defrost Heaters 208 Volts Amps	Defrost Heaters 208 Volts Watts	Defrost Heaters 240 Volts Amps	Defrost Heaters 240 Volts Watts
O3IM	8′	6	3.00	180	0.46	27.6	0.67	80	7.70	1600	8.88	2130
	12′	8	4.00	240	0.62	36.8	1.06	127	11.54	2400	13.32	3200
O3IMB	6′	4	2.00	120	0.31	18.4	0.63	76	5.77	1200	6.66	1596
	8′	6	3.00	180	0.46	27.6	0.88	106	7.70	1600	8.88	2130
	12′	8	4.00	240	0.62	36.8	1.24	149	11.54	2400	13.32	3200
O3IMBB	8′	6	3.00	180	0.46	27.6	0.91	109	7.70	1600	8.88	2130

Lighting Data

Model		Typical per Light Row 120 Volts Amps	Typical per Light Row 120 Volts Watts	Maximum Lighting 120 Volts Amps	Maximum Lighting 120 Volts Watts
O3IM	8′	NA[1]	NA	1.88	226
	12′	NA	NA	5.69	683
O3IMB	6′	NA	NA	1.40	168
	8′	NA	NA	2.02	242
	12′	NA	NA	3.24	389
O3IMBB	8′	NA	NA	1.84	221

[1] Not applicable.

Guidelines & Control Settings

Model	Application	BTUH/ft[2]	Coil Type	Evaporator (°F)	Superheat Set Point @ Bulb (°F)	Discharge Air (°F)	Return Air (°F)	Discharge Air Velocity[4] (FPM)
O3IM	Meat	1600[3]	Enh.	17	6-8	26	38	270
	Deli	1470[3]	Enh.	22	6-8	30	40	270
O3IMB	Meat	1600[3]	Enh.	17	6-8	26	38	270
	Deli	1470[3]	Enh.	22	6-8	30	40	270
O3IMBB	Meat	1378[3]	Enh.	17	6-8	26	38	270
	Deli	1266[3]	Enh.	22	6-8	30	40	270

[2] BTUHs/ft listed are for parallel operation. Conventional ratings may be approximated by multiplying listed rating by 1.04.

[3] High efficiency fans reduce refrigeration load by 96 BTUHs/fan.

[4] Average discharge air velocity at peak of defrost.

Defrost Controls

Model	Defrosts Per Day	Run-Off Time (min)	Electric Defrost Fail-safe (min)	Electric Defrost Termination Temp. (°F)	Timed Off Defrost Fail-safe (min)	Timed Off Defrost Termination Temp. (°F)	Hot Gas Defrost Fail-safe (min)	Hot Gas Defrost Termination Temp. (°F)	Reverse Air Defrost Fail-safe (min)	Reverse Air Defrost Termination Temp. (°F)
O3IM/O3IMB/O3IMBB	4	6 - 8	30	47	45[5]	45[5]	26	45	- - -[6]	- - -

[5] Only recommended with the high efficiency coil at a 22°F evaporator.

[6] NOTE: - - - not an option on this case model.

Medium Temperature Defrost Schedule

No. Per Day	Hours
1	12 midnight
2	12 am - 12 pm
3	6 am - 2 pm - 10 pm
4	12 - 6 am - 12 - 6 pm

All measurements are taken per ARI 1200 - 2002 specifications.

NSF COMPONENT
c UL us
Hill PHOENIX EXCELLENCE
A DOVER COMPANY

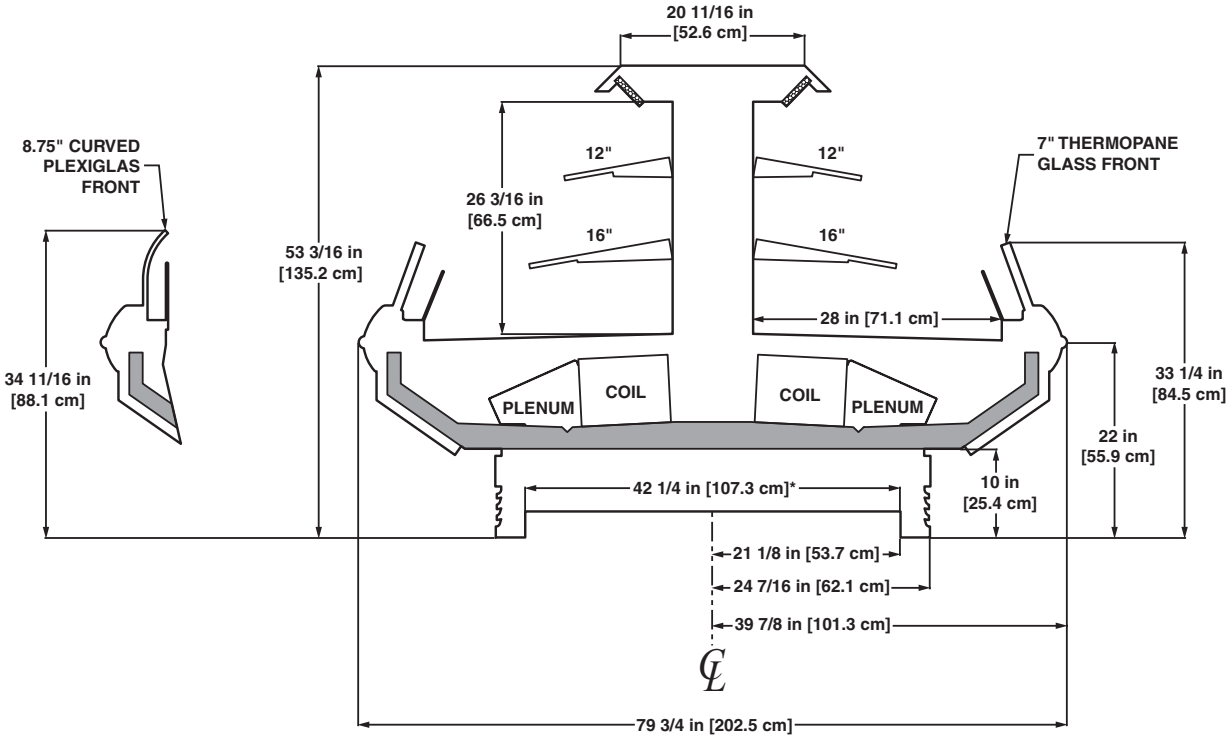

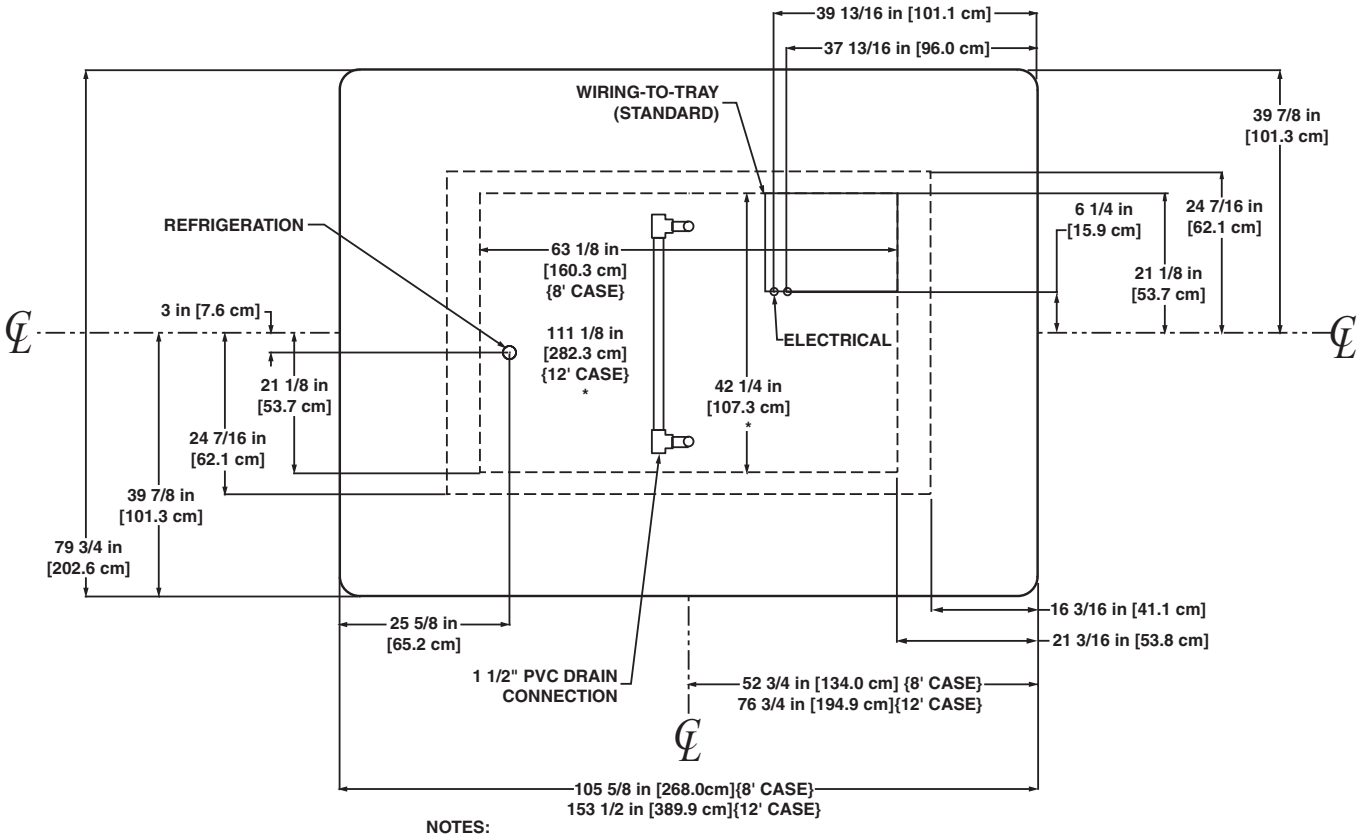

NOTES:

* STUB-UP AREA

- FRONT AND CENTER SILL HEIGHTS VARY WITH BASEFRAME HEIGHT
- SUCTION LINE - 7/8", LIQUID LINE - 3/8"
- AVAILABLE SHELF SIZES: 10", 12", 14" & 16"

NSF COMPONENT c UL us

A DOVER COMPANY

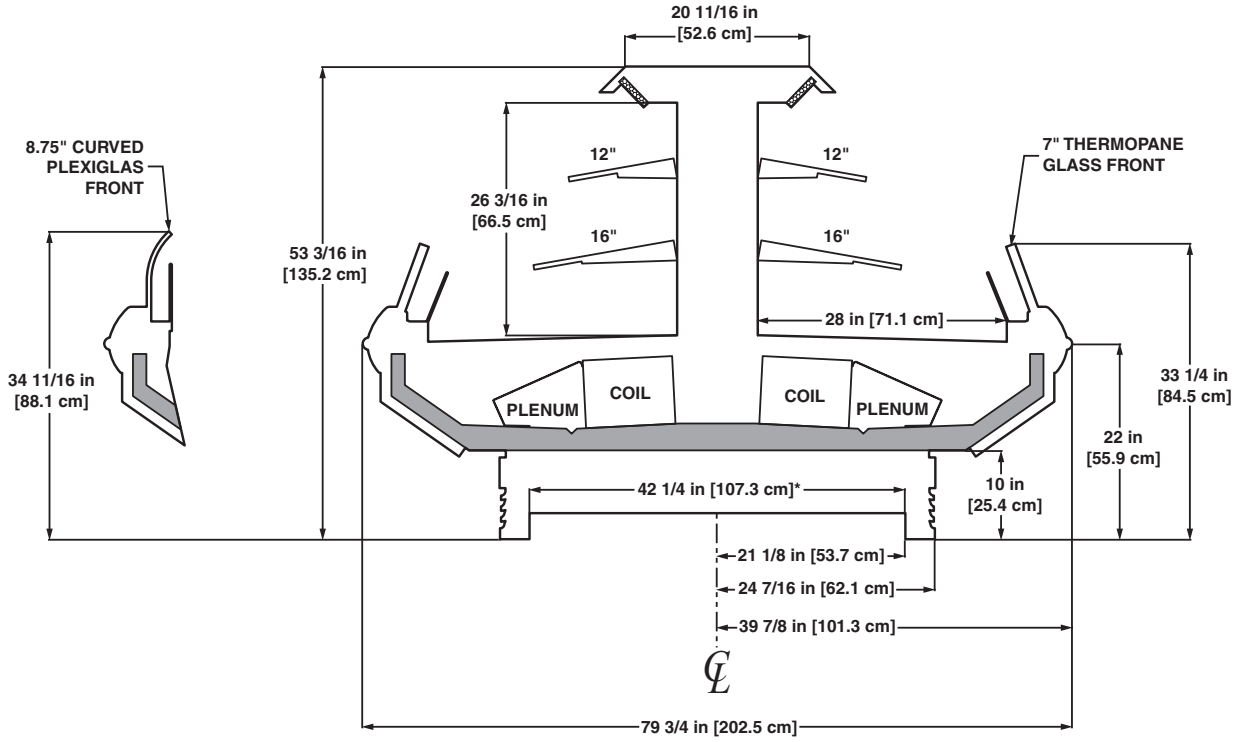

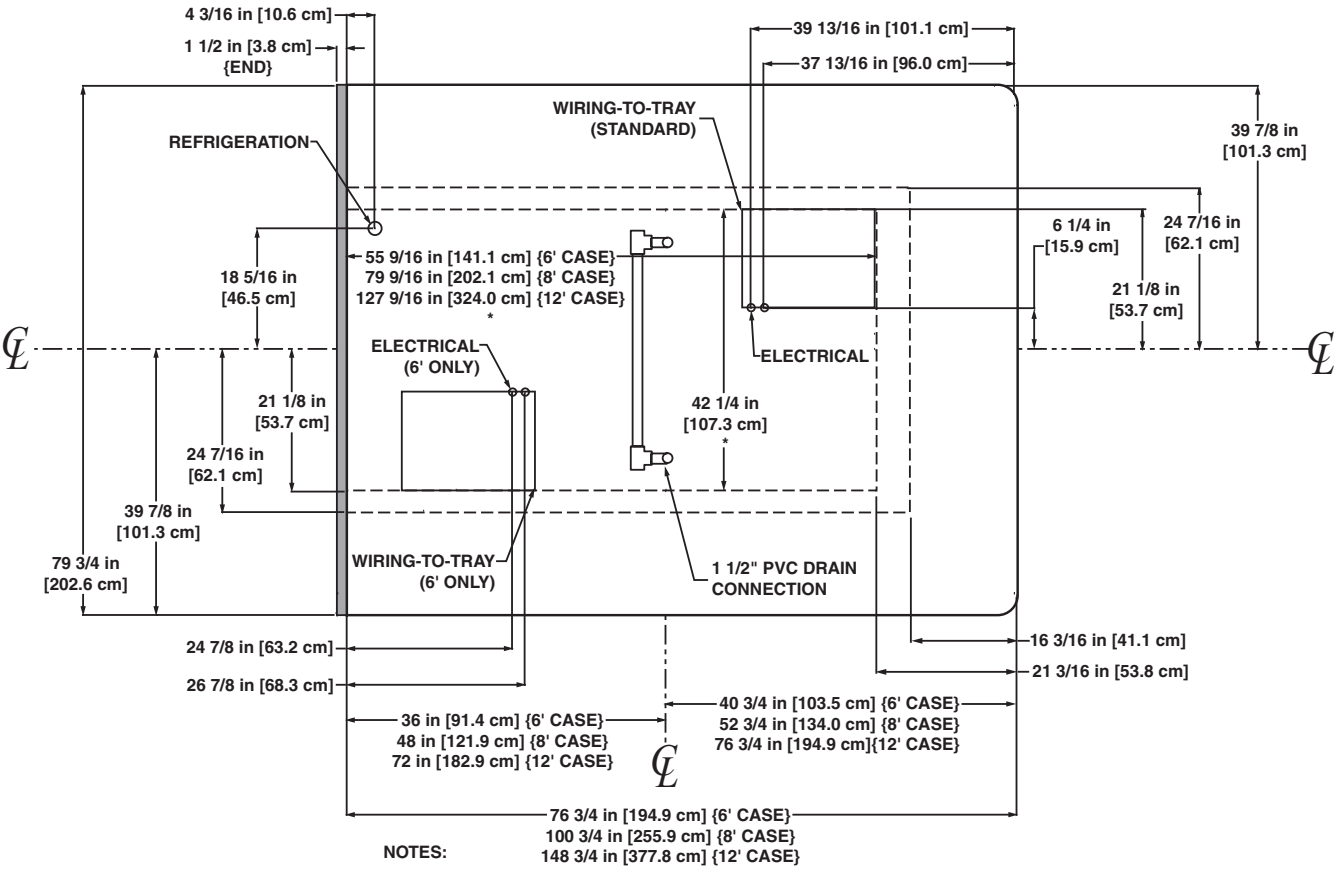

NOTES:

* STUB-UP AREA

- FRONT AND CENTER SILL HEIGHTS VARY WITH BASEFRAME HEIGHT
- SUCTION LINE - 7/8", LIQUID LINE - 3/8"
- AVAILABLE SHELF SIZES: 10", 12", 14" & 16"

NSF COMPONENT

A DOVER COMPANY

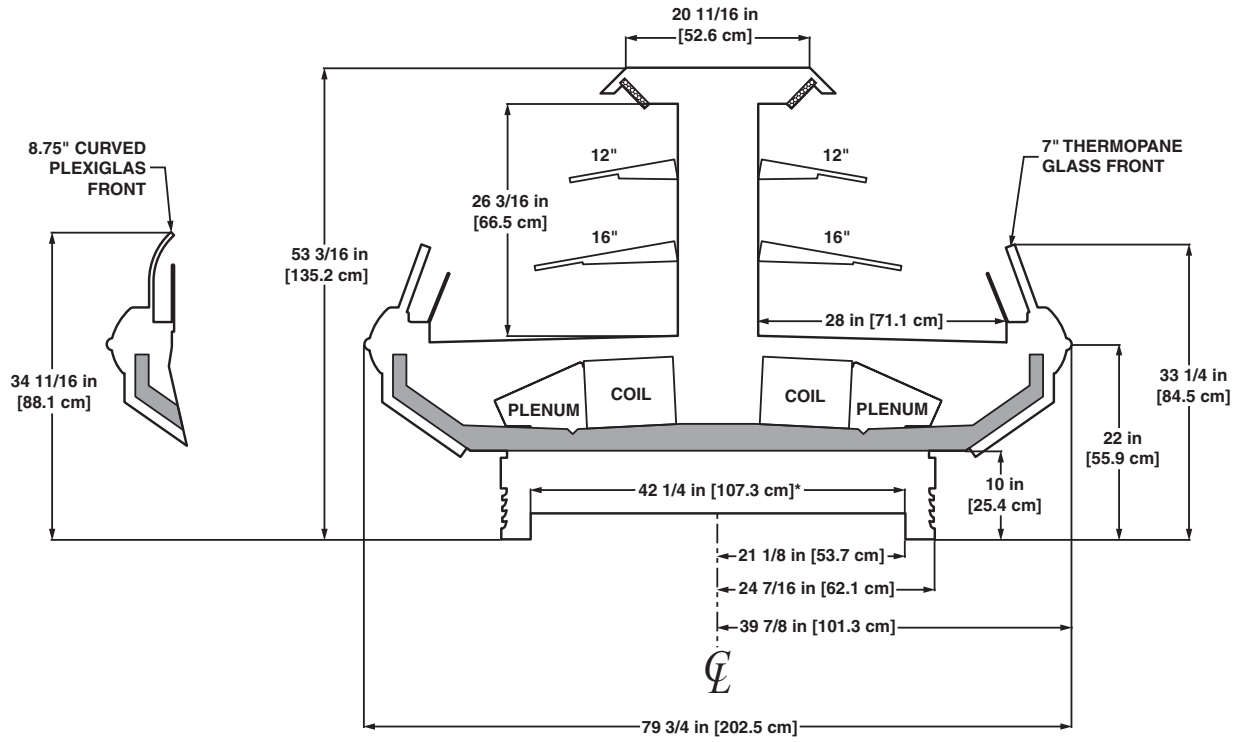

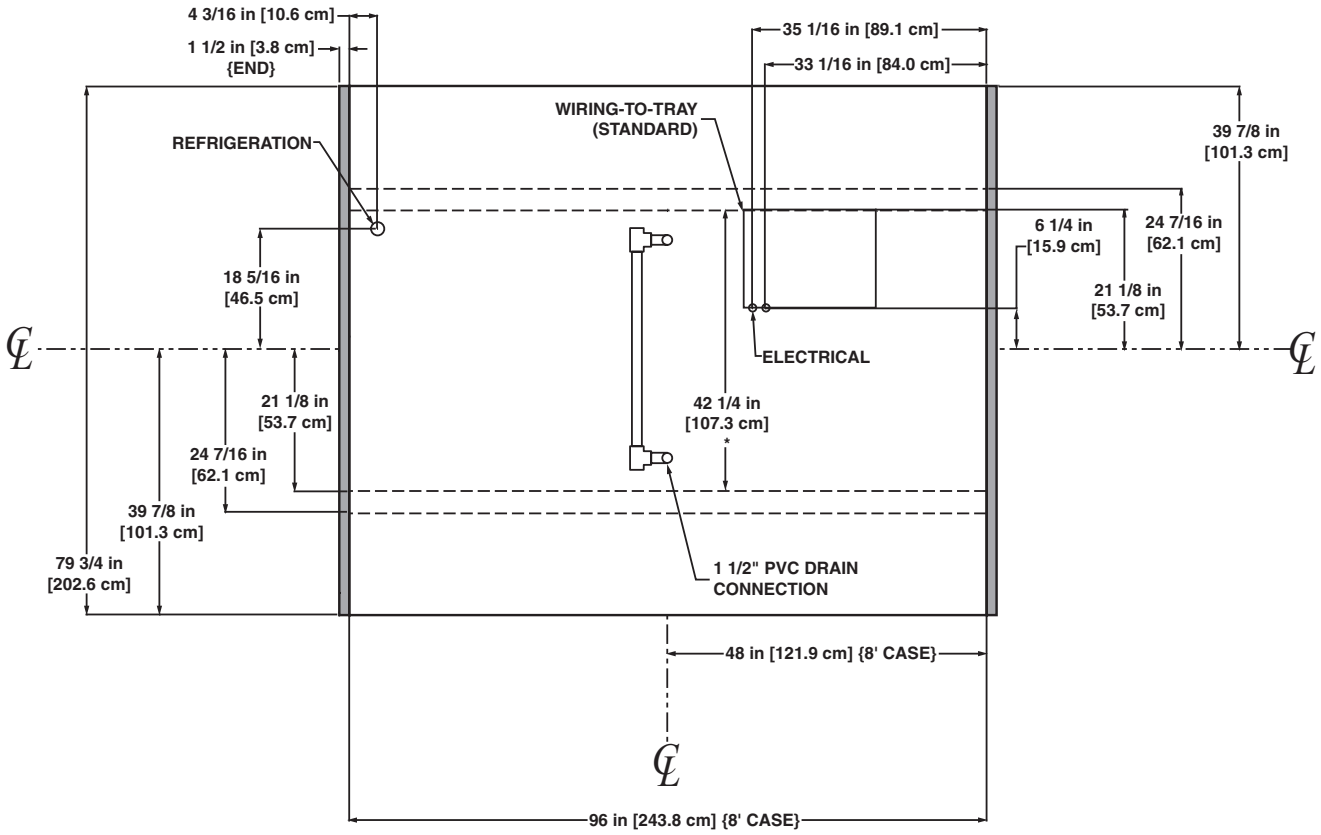

NOTES:

* STUB-UP AREA

- FRONT AND CENTER SILL HEIGHTS VARY WITH BASEFRAME HEIGHT
- SUCTION LINE - 7/8", LIQUID LINE - 3/8"
- AVAILABLE SHELF SIZES: 10", 12", 14" & 16"

NSF COMPONENT

A DOVER COMPANY

Wide Island Multi-Deck Produce Merchandiser

O3IP - 8′ & 12′ wide island double wraparound end
O3IPB - 8′ & 12′ wide island single wraparound end

Electrical Data

Model		Fans per Case	Standard Fan		High Efficiency Fans		Anti-Condensate Heaters		Defrost Heaters			
			120 Volts		120 Volts		120 Volts		208 Volts		240 Volts	
			Amps	Watts	Amps	Watts	Amps	Watts	Amps	Watts	Amps	Watts
O3IP	8′	6	2.04	102	0.90	66	0.82	98	4.34	902	5.00	1200
	12′	8	2.72	136	1.20	88	1.08	130	7.22	1502	8.33	2000
O3IPB	8′	6	2.04	102	0.90	66	0.75	90	4.34	902	5.00	1200
	12′	8	2.72	136	1.20	88	1.17	140	7.22	1502	8.33	2000

Lighting Data

Model		Typical per Light Row		Maximum Lighting	
		120 Volts		120 Volts	
		Amps	Watts	Amps	Watts
O3IP	8′	NA[1]	NA	5.71	546
	12′	NA	NA	7.46	779
O3IPB	8′	NA	NA	4.76	514
	12′	NA	NA	6.02	665

[1] Not applicable.

Guidelines & Control Settings

Model	BTUH/ft[2]	Evaporator (°F)	Superheat Set Point @ Bulb (°F)	Discharge Air (°F)	Return Air (°F)	Discharge Air Velocity[3] (FPM)
O3IP/O3IPB	1050[4]	22	6-8	34	48	160

[2] BTUHs/ft listed are for parallel operation. Conventional ratings may be approximated by multiplying listed rating by 1.04.

[3] Average discharge air velocity at peak of defrost.

[4] Add 650 BTUH per wrap end.

Defrost Controls

Model	Defrosts Per Day	Run-Off Time (min)	Electric Defrost		Timed Off Defrost		Hot Gas Defrost		Reverse Air Defrost	
			Fail-safe (min)	Termination Temp. (°F)	Fail-safe (min)	Termination Temp. (°F)	Fail-safe (min)	Termination Temp. (°F)	Fail-safe (min)	Termination Temp. (°F)
O3IP/O3IPB	4	6 - 8	30	47	44	38	---[5]	---	---	---

[5] NOTE: --- not an option on this case model.

Medium Temperature Defrost Schedule

No. Per Day	Hours
1	12 midnight
2	12 am - 12 pm
3	6 am - 2 pm - 10 pm
4	12 - 6 am - 12 - 6 pm

All measurements are taken per ARI 1200 - 2002 specifications.

6/07

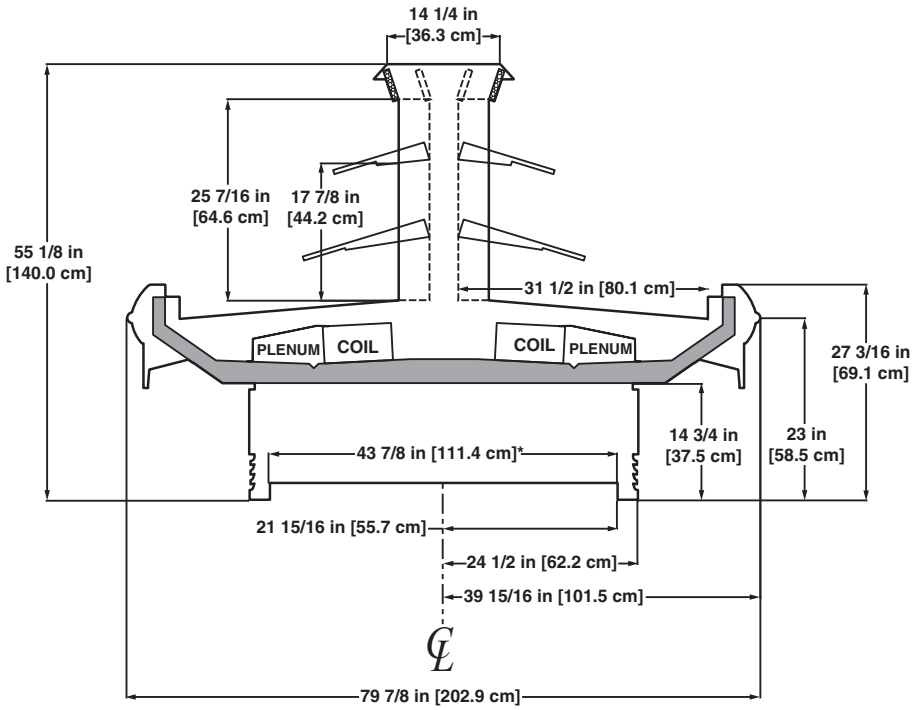

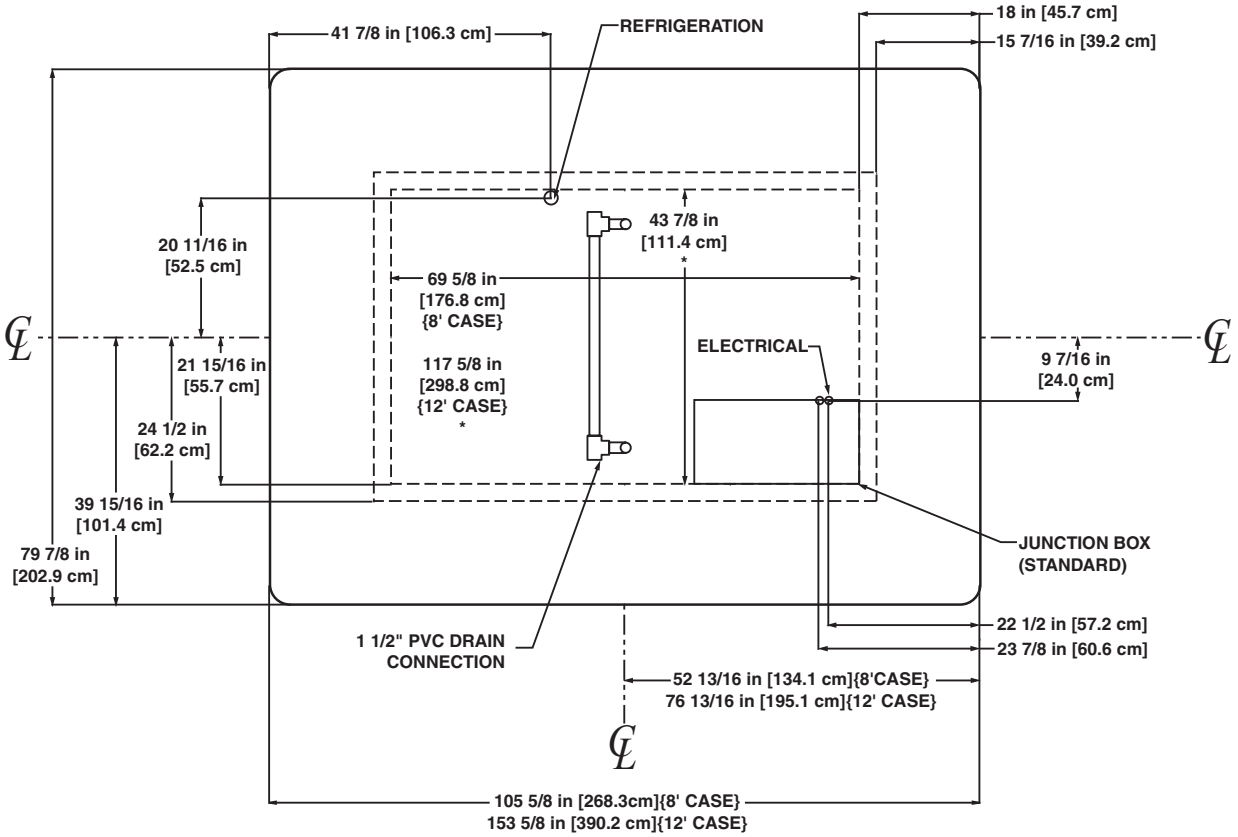

NOTES:

* STUB-UP AREA

- FRONT AND CENTER SILL HEIGHTS VARY WITH BASEFRAME HEIGHT
- SUCTION LINE - 7/8", LIQUID LINE - 3/8"
- AVAILABLE SHELF SIZES: 12" & 16"

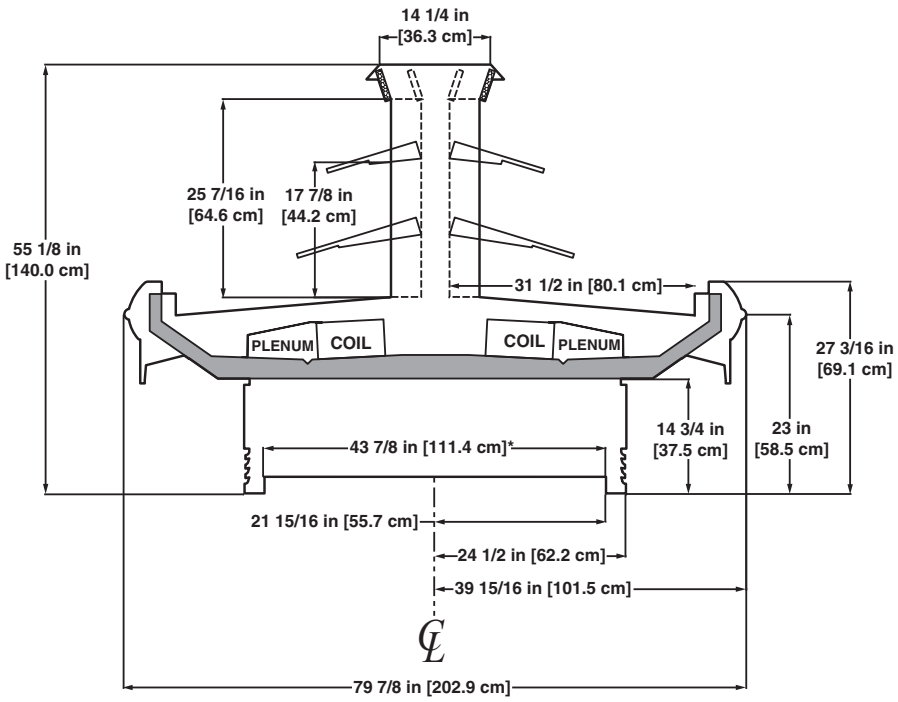

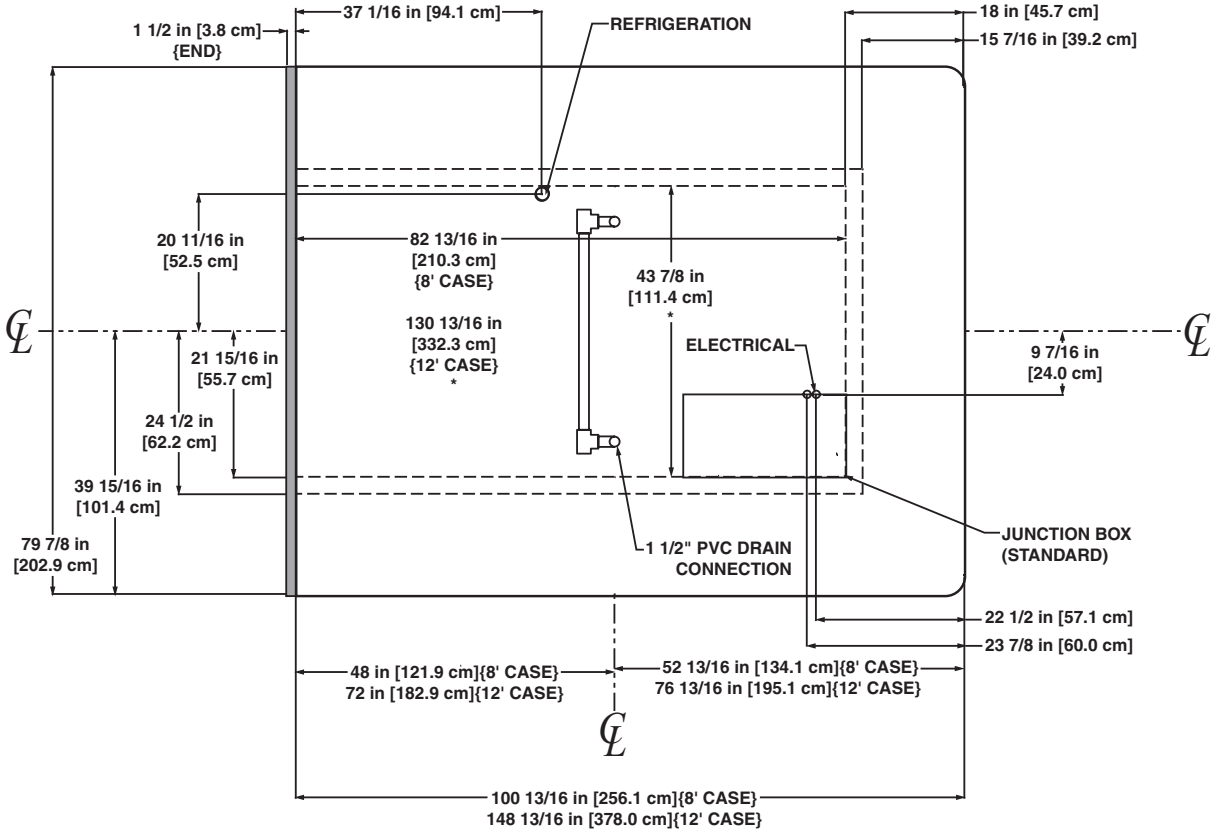

NOTES:

* STUB-UP AREA

- FRONT AND CENTER SILL HEIGHTS VARY WITH BASEFRAME HEIGHT
- SUCTION LINE - 7/8", LIQUID LINE - 3/8"
- AVAILABLE SHELF SIZES: 12" & 16"

NSF COMPONENT

A DOVER COMPANY

Wide Island Multi-Deck Deli/Meat Merchandiser

O4ID - 8′ & 12′ double wraparound end
O4IDB - 6′, 8′ & 12′ single wraparound end
O4IDBB - 8′ double joint end

Electrical Data

Model		Fans per Case	Standard Fans 120 Volts Amps	Standard Fans 120 Volts Watts	High Efficiency Fans 120 Volts Amps	High Efficiency Fans 120 Volts Watts	Anti-Condensate Heaters 120 Volts Amps	Anti-Condensate Heaters 120 Volts Watts	Defrost Heaters 208 Volts Amps	Defrost Heaters 208 Volts Watts	Defrost Heaters 240 Volts Amps	Defrost Heaters 240 Volts Watts
O4ID	8′	6	3.00	180	0.70	42.0	0.67	80	7.70	1600	8.88	2130
	12′	8	4.00	240	0.94	56.0	1.06	127	11.54	2400	13.32	3200
O4IDB	6′	4	2.00	120	0.47	28.0	0.63	76	5.77	1200	6.66	1596
	8′	6	3.00	180	0.70	42.0	0.88	106	7.70	1600	8.88	2130
	12′	8	4.00	240	0.94	56.0	1.24	149	11.54	2400	13.32	3200
O4IDBB	8′	6	3.00	180	0.70	42.0	0.91	109	7.70	1600	8.88	2130

Lighting Data

Model		Typical per Light Row 120 Volts Amps	Typical per Light Row 120 Volts Watts	Maximum Lighting 120 Volts Amps	Maximum Lighting 120 Volts Watts
O4ID	8′	NA[1]	NA	3.90	468
	12′	NA	NA	6.06	727
O4IDB	6′	NA	NA	3.07	368
	8′	NA	NA	3.79	455
	12′	NA	NA	5.53	664
O4IDBB	8′	NA	NA	4.00	480

[1] Not applicable.

Guidelines & Control Settings

Model	Application	BTUH/ft[2]	Coil Type	Evaporator (°F)	Superheat Set Point @ Bulb (°F)	Discharge Air (°F)	Return Air (°F)	Discharge Air Velocity[4] (FPM)
O4ID	Meat	2100[3]	Enh.	17	6-8	25	40	130
	Deli	1950[3]	Enh.	22	6-8	28	43	130
O4IDB	Meat	2100[3]	Enh.	17	6-8	25	40	130
	Deli	1950[3]	Enh.	22	6-8	28	43	130
O4IDBB	Meat	1809[3]	Enh.	17	6-8	25	40	130
	Deli	1679[3]	Enh.	22	6-8	28	43	130

[2] BTUHs/ft listed are for parallel operation. Conventional ratings may be approximated by multiplying listed rating by 1.04.

[3] High efficiency fans reduce refrigeration load by 96 BTUHs/fan.

[4] Average discharge air velocity at peak of defrost.

Defrost Controls

Model	Defrosts Per Day	Run-Off Time (min)	Electric Defrost Fail-safe (min)	Electric Defrost Termination Temp. (°F)	Timed Off Defrost Fail-safe (min)	Timed Off Defrost Termination Temp. (°F)	Hot Gas Defrost Fail-safe (min)	Hot Gas Defrost Termination Temp. (°F)	Reverse Air Defrost Fail-safe (min)	Reverse Air Defrost Termination Temp. (°F)
O4ID/O4IDB/O4IDBB	4	6 - 8	30	47	45[5]	45[5]	26	45	- - -[6]	- - -

[5] Only recommended with the enhanced efficiency coil at a 22°F evaporator.

[6] NOTE: --- not an option on this case model.

Medium Temperature Defrost Schedule

No. Per Day	Hours
1	12 midnight
2	12 am - 12 pm
3	6 am - 2 pm - 10 pm
4	12 - 6 am - 12 - 6 pm

All measurements are taken per ARI 1200 - 2002 specifications.

6/07

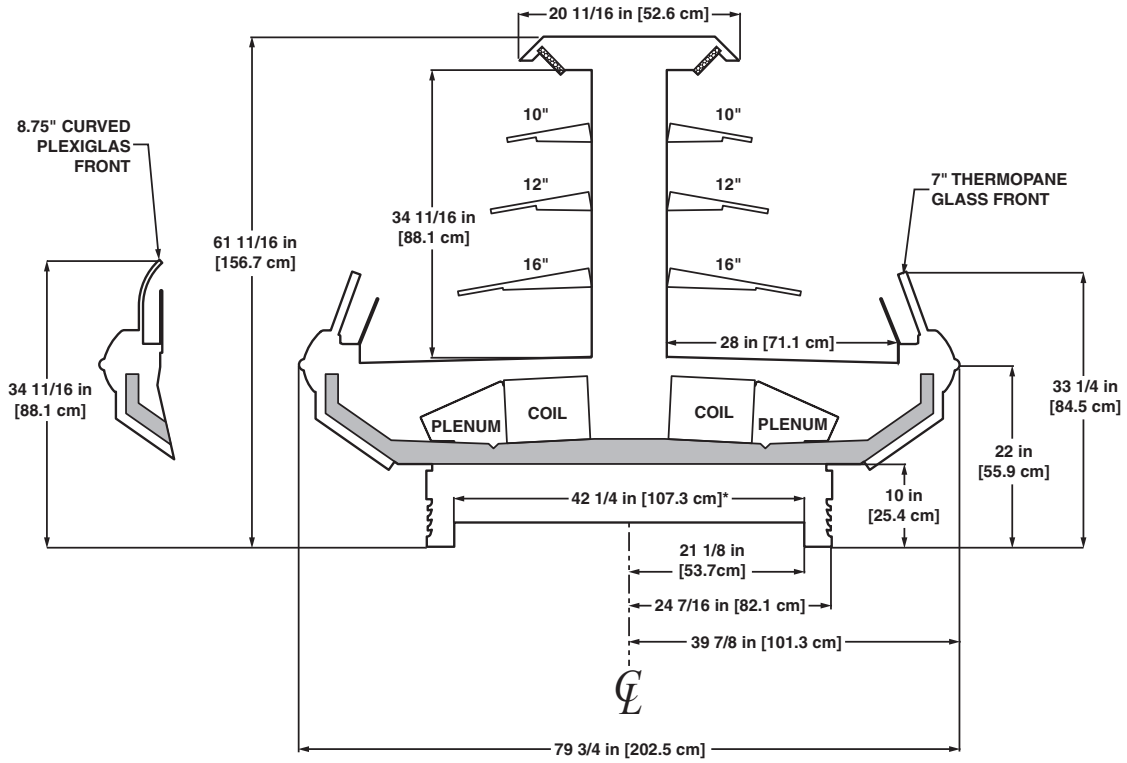

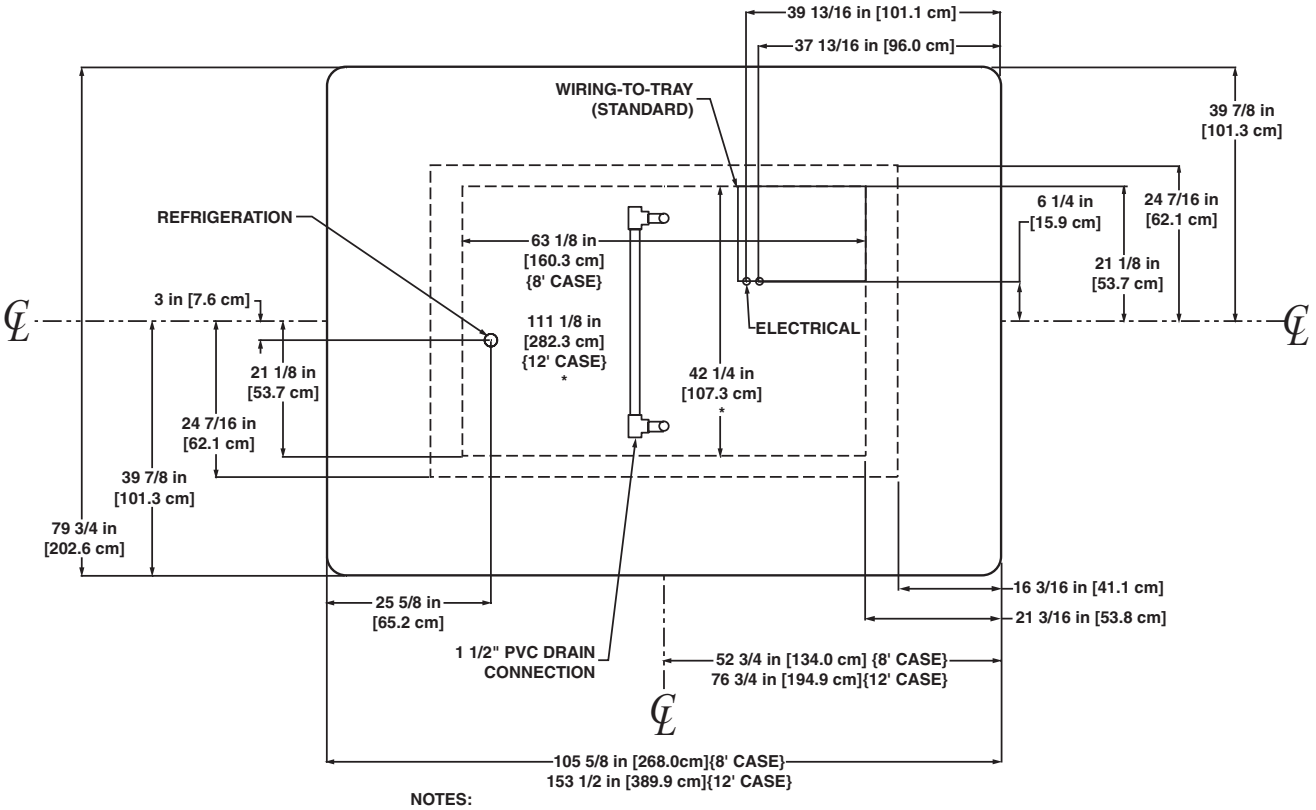

NOTES:

* STUB-UP AREA

- FRONT AND CENTER SILL HEIGHTS VARY WITH BASEFRAME HEIGHT
- SUCTION LINE - 7/8", LIQUID LINE - 3/8"
- AVAILABLE SHELF SIZES: 10", 12", 14" & 16"

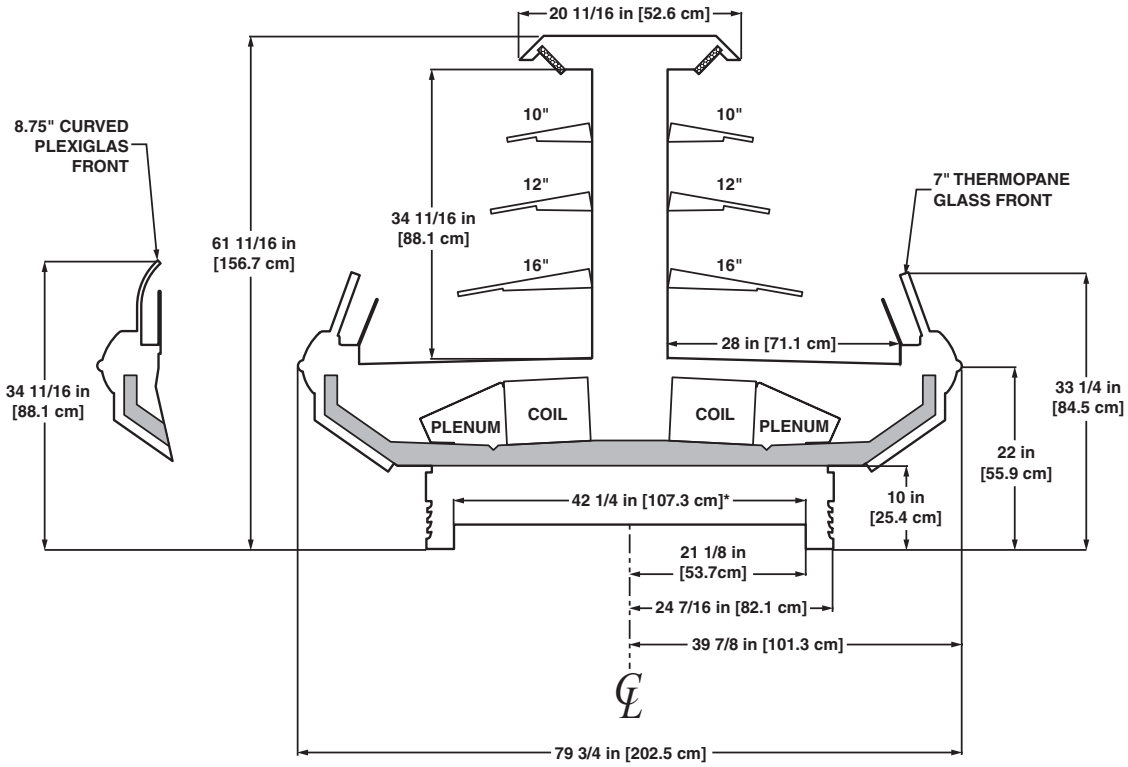

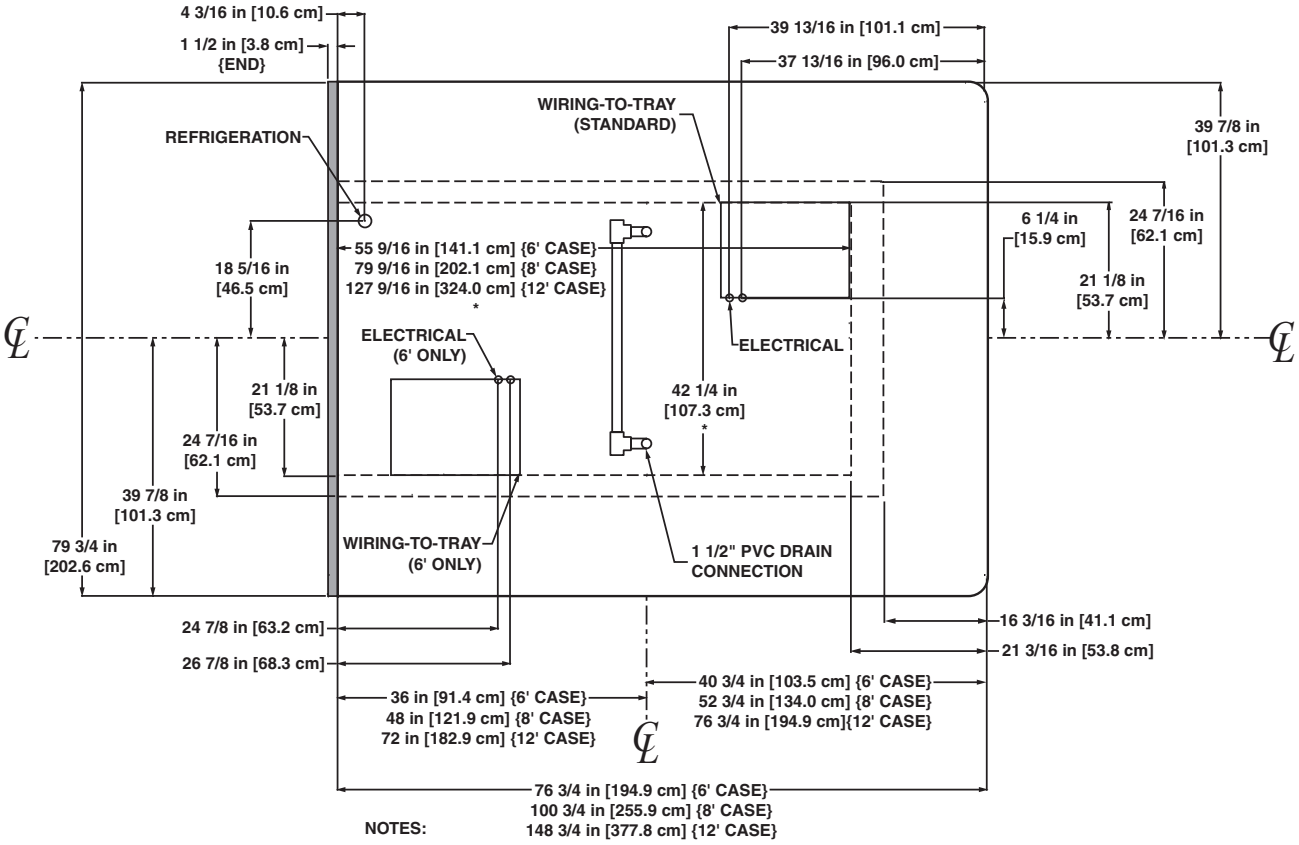

NOTES:

* STUB-UP AREA

- FRONT AND CENTER SILL HEIGHTS VARY WITH BASEFRAME HEIGHT
- SUCTION LINE - 7/8", LIQUID LINE - 3/8"
- AVAILABLE SHELF SIZES: 10", 12", 14" & 16"

NSF COMPONENT

A DOVER COMPANY

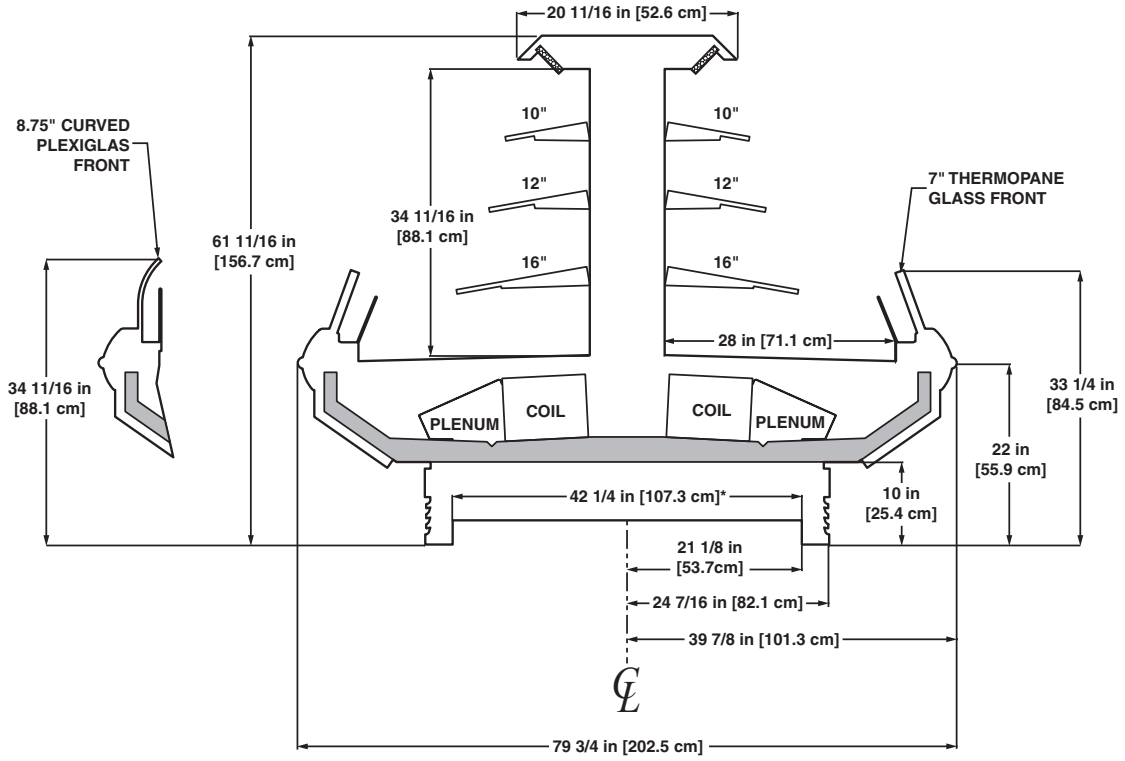

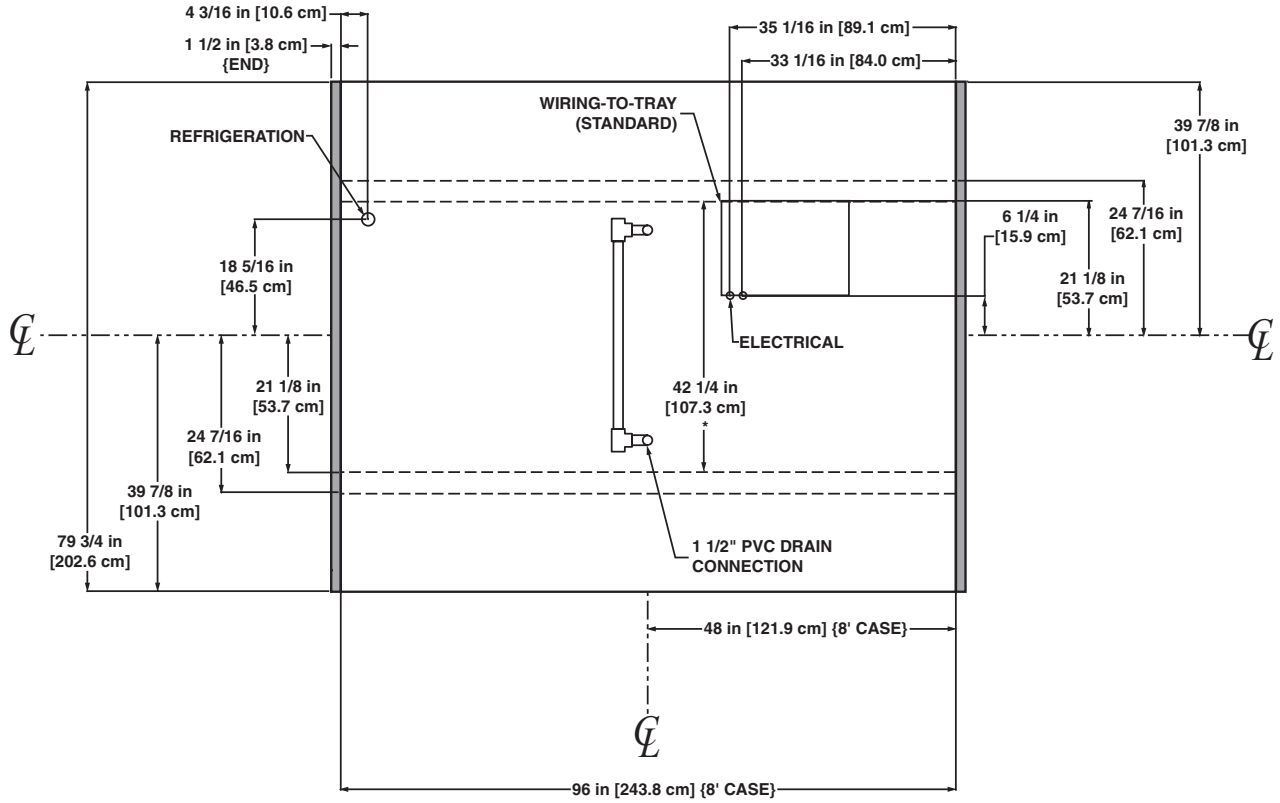

NOTES:

* STUB-UP AREA

- FRONT AND CENTER SILL HEIGHTS VARY WITH BASEFRAME HEIGHT
- SUCTION LINE - 7/8", LIQUID LINE - 3/8"
- AVAILABLE SHELF SIZES: 10", 12", 14" & 16"

SERVICE

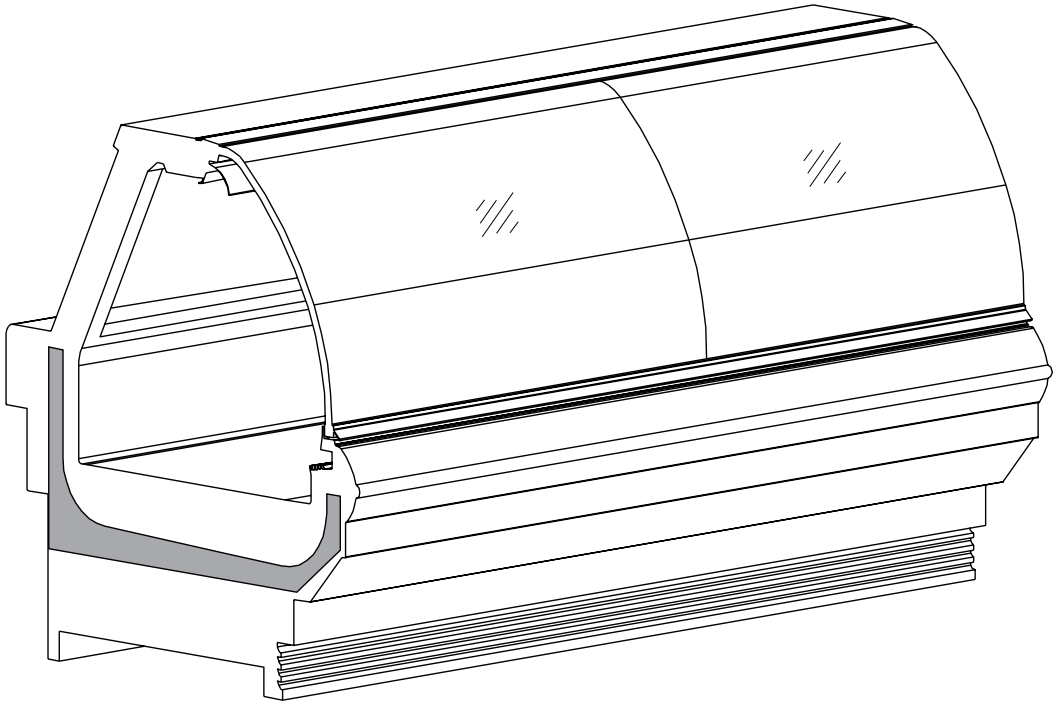

Notes:

- **Cases comply with ANSI / NSF* Standard 7. Units marked as components require remote refrigeration.**
- **Allow for an extra 1/8" per joint when lining up merchandisers.**
- **Front sill height does not affect case performance unless specifically shown.**
- **Front and rear sill heights vary with baseframe height.**

* ANSI - American National Standard Institute
NSF - National Sanitation Foundation

American Style Curved Glass Service Deli Merchandiser

OSA - 4′, 6′, 8′ & 12′

Electrical Data

Model		Fans per Case	Standard Fans 120 Volts Amps	Standard Fans 120 Volts Watts	High Efficiency Fans 120 Volts Amps	High Efficiency Fans 120 Volts Watts	Anti-Condensate Heaters 120 Volts Amps	Anti-Condensate Heaters 120 Volts Watts	Defrost Heaters 208 Volts Amps	Defrost Heaters 208 Volts Watts	Defrost Heaters 240 Volts Amps	Defrost Heaters 240 Volts Watts
OSA	4′	2	0.68	34	0.30	22	1.08	130	1.92	400	2.22	532
	6′	2	0.68	34	0.30	22	1.33	160	2.88	600	3.33	798
	8′	3	1.02	51	0.45	33	2.11	253	3.85	800	4.44	1065
	12′	4	1.36	68	0.60	44	2.93	352	5.77	1200	6.67	1600

Lighting Data

Model		Bulbs per Row	Bulb Length	Typical per Light Row 120 Volts Amps	Typical per Light Row 120 Volts Watts	Maximum Lighting 120 Volts Amps	Maximum Lighting 120 Volts Watts
OSA	4′	1	4′	0.23	28	1.17	140
	6′	2	3′	0.37	44	1.83	220
	8′	2	4′	0.47	56	2.33	280
	12′	3	4′	0.70	84	3.50	420

Guidelines & Control Settings

Model	BTUH/ft[1]	Evaporator (°F)	Superheat Set Point @ Bulb (°F)	Discharge Air (°F)	Return Air (°F)	Discharge Air Velocity[2] (FPM)
OSA w/ Shelf Lights	320	22	6-8	30	39	235
OSA w/o Shelf Lights	290	22	6-8	30	39	235

[1] BTUHs/ft listed are for parallel operation. Conventional ratings may be approximated by multiplying listed rating by 1.04.

[2] Average discharge air velocity at peak of defrost.

Defrost Controls

Model	Defrosts Per Day	Run-Off Time (min)	Electric Defrost Fail-safe (min)	Electric Defrost Termination Temp. (°F)	Timed Off Defrost Fail-safe (min)	Timed Off Defrost Termination Temp. (°F)	Hot Gas Defrost Fail-safe (min)	Hot Gas Defrost Termination Temp. (°F)	Reverse Air Defrost Fail-safe (min)	Reverse Air Defrost Termination Temp. (°F)
OSA	2	6 - 8	35	50	75[3]	50[3]	20	45	- - -[4]	- - -

[3] Not recommended on this model due to long defrost time.

[4] NOTE: - - - not an option on this case model.

Medium Temperature Defrost Schedule

No. Per Day	Hours
1	12 midnight
2	12 am - 12 pm
3	6 am - 2 pm - 10 pm
4	12 - 6 am - 12 - 6 pm

All measurements are taken per ARI 1200 - 2002 specifications.

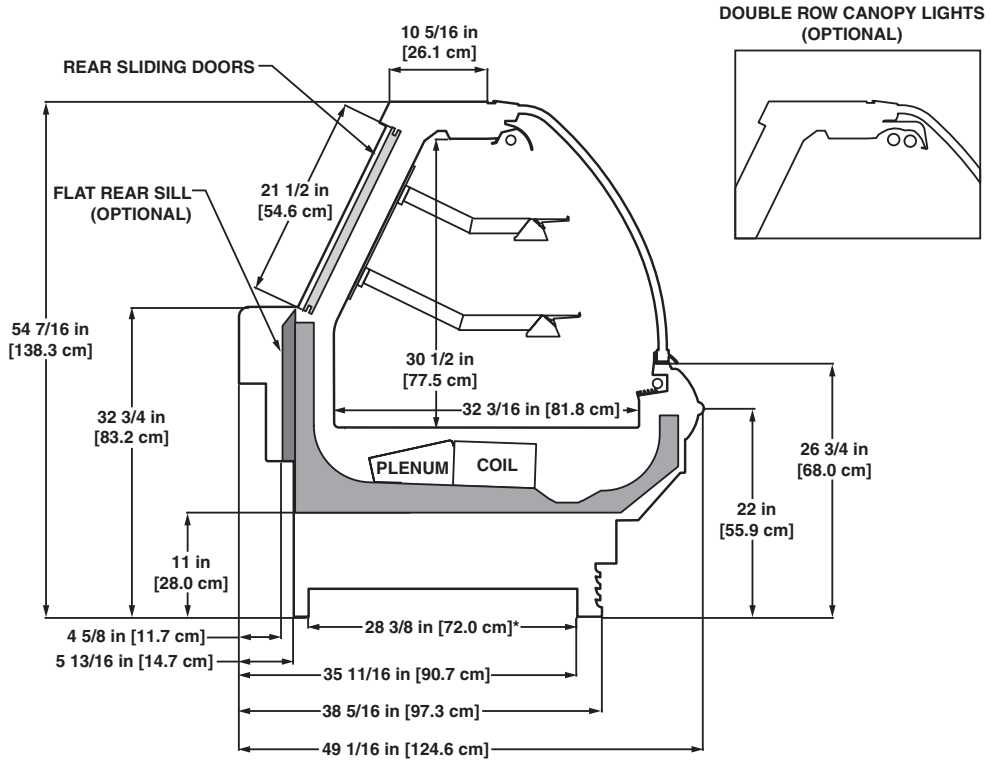

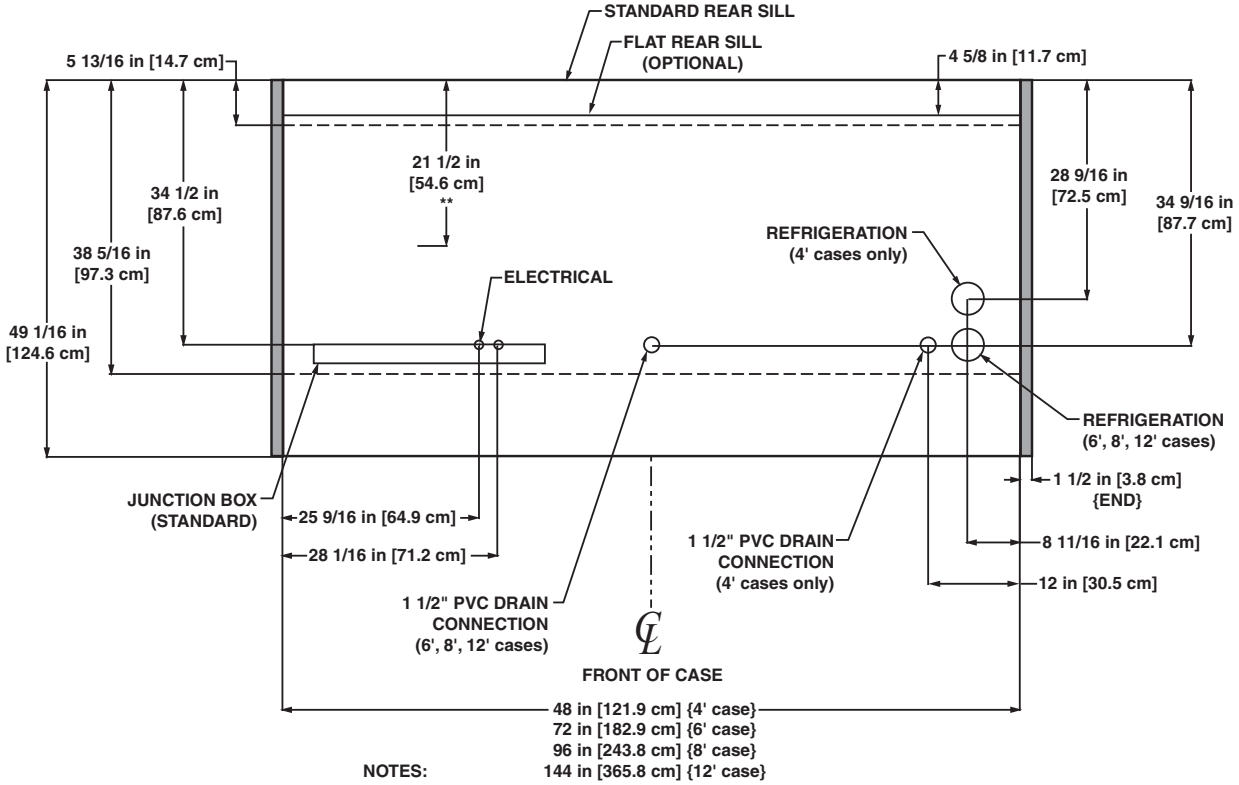

NOTES:

* STUB-UP AREA
** RECOMMENDED STUB-UP CENTERLINE FOR ELECTRICAL AND HUB DRAINS

- FRONT, REAR AND TOP SILL HEIGHTS VARY WITH BASEFRAME HEIGHT
- ENDS ADD APPROXIMATELY 1 INCH TO CASE HEIGHT
- SUCTION LINE - 7/8", LIQUID LINE - 1/2"
- AVAILABLE SHELF SIZES: 10" & 12"

NSF COMPONENT c UL us

A DOVER COMPANY

OSA
(7" BASEFRAME)

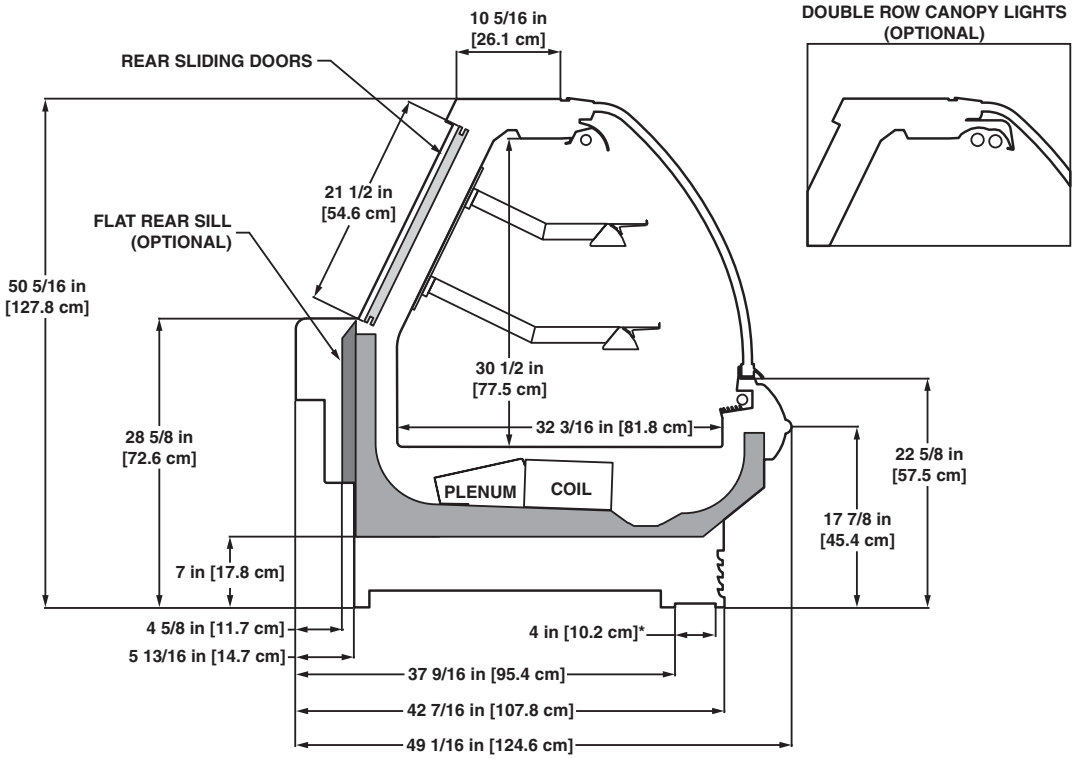

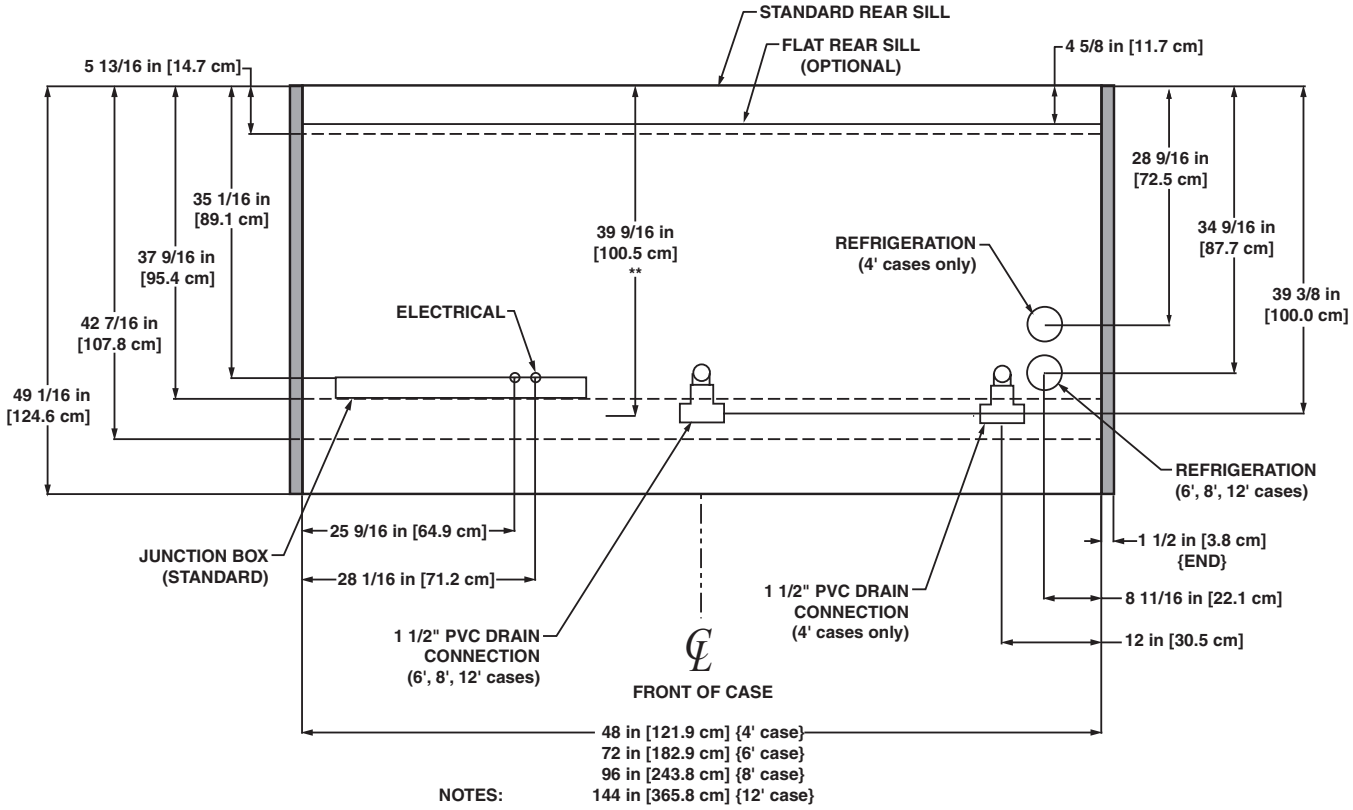

NOTES:

* STUB-UP AREA
** RECOMMENDED STUB-UP CENTERLINE FOR ELECTRICAL AND HUB DRAINS

- FRONT, REAR AND TOP SILL HEIGHTS VARY WITH BASEFRAME HEIGHT
- ENDS ADD APPROXIMATELY 1 INCH TO CASE HEIGHT
- SUCTION LINE - 7/8", LIQUID LINE - 1/2"
- AVAILABLE SHELF SIZES: 10" & 12"

NSF COMPONENT

A DOVER COMPANY

American Style Curved Glass Service Deli/Meat/Seafood Gravity Coil Merchandiser

OSAG - 4′, 6′, 8′ & 12′

Electrical Data

Model		Fans per Case	Standard Fans 120 Volts Amps	Standard Fans 120 Volts Watts	High Efficiency Fans 120 Volts Amps	High Efficiency Fans 120 Volts Watts	Anti-Condensate Heaters 120 Volts Amps	Anti-Condensate Heaters 120 Volts Watts	Defrost Heaters 208 Volts Amps	Defrost Heaters 208 Volts Watts	Defrost Heaters 240 Volts Amps	Defrost Heaters 240 Volts Watts
OSAG	4′	2	0.68	34	0.30	22	1.48	178	- - -[1]	- - -	- - -	- - -
	6′	2	0.68	34	0.30	22	1.93	232	- - -	- - -	- - -	- - -
	8′	3	1.02	51	0.45	33	2.91	349	- - -	- - -	- - -	- - -
	12′	4	1.36	68	0.60	44	4.13	496	- - -	- - -	- - -	- - -

[1] NOTE: - - - not an option on this case model.

Lighting Data

Model		Bulbs per Row	Bulb Length	Typical per Light Row 120 Volts Amps	Typical per Light Row 120 Volts Watts	Maximum Lighting 120 Volts Amps	Maximum Lighting 120 Volts Watts
OSAG	4′	1	4′	0.23	28	1.17	140
	6′	2	3′	0.37	44	1.83	220
	8′	2	4′	0.47	56	2.33	280
	12′	3	4′	0.70	84	3.50	420

Guidelines & Control Settings

Model	BTUH/ft[2]	Evaporator (°F)	Superheat Set Point @ Bulb (°F)	Discharge Air (°F)	Return Air (°F)	Discharge Air Velocity[3] (FPM)
OSAG[4]	270	15	6-8	21-31	38	125

[2] BTUHs/ft listed are for parallel operation. Conventional ratings may be approximated by multiplying listed rating by 1.04.

[3] Average discharge air velocity at peak of defrost.

[4] A suction stop solenoid installed in the top coil's suction line is required for this case. Control of the solenoid can be achieved with a thermostat at the case or an external controller. A liquid line solenoid alone will not allow the case to cycle properly and is not recommended for control of this case. The thermostat probe should be located on the inlet of the top coil. The cut out temperature should be set to 30°F and the cut in temperature should be set to 35°F. These are recommended starting values and may need to be adjusted based on store conditions.

Defrost Controls

Model	Defrosts Per Day	Run-Off Time (min)	Electric Defrost Fail-safe (min)	Electric Defrost Termination Temp. (°F)	Timed Off Defrost Fail-safe (min)	Timed Off Defrost Termination Temp. (°F)	Hot Gas Defrost Fail-safe (min)	Hot Gas Defrost Termination Temp. (°F)	Reverse Air Defrost Fail-safe (min)	Reverse Air Defrost Termination Temp. (°F)
OSAG	2	6 - 8	- - -	- - -	65	46	20	45	- - -	- - -

Medium Temperature Defrost Schedule

No. Per Day	Hours
1	12 midnight
2	12 am - 12 pm
3	6 am - 2 pm - 10 pm
4	12 - 6 am - 12 - 6 pm

All measurements are taken per ARI 1200 - 2002 specifications.

NSF COMPONENT

c UL us

Hill PHOENIX EXCELLENCE

A DOVER COMPANY

OSAG
(11" BASEFRAME)

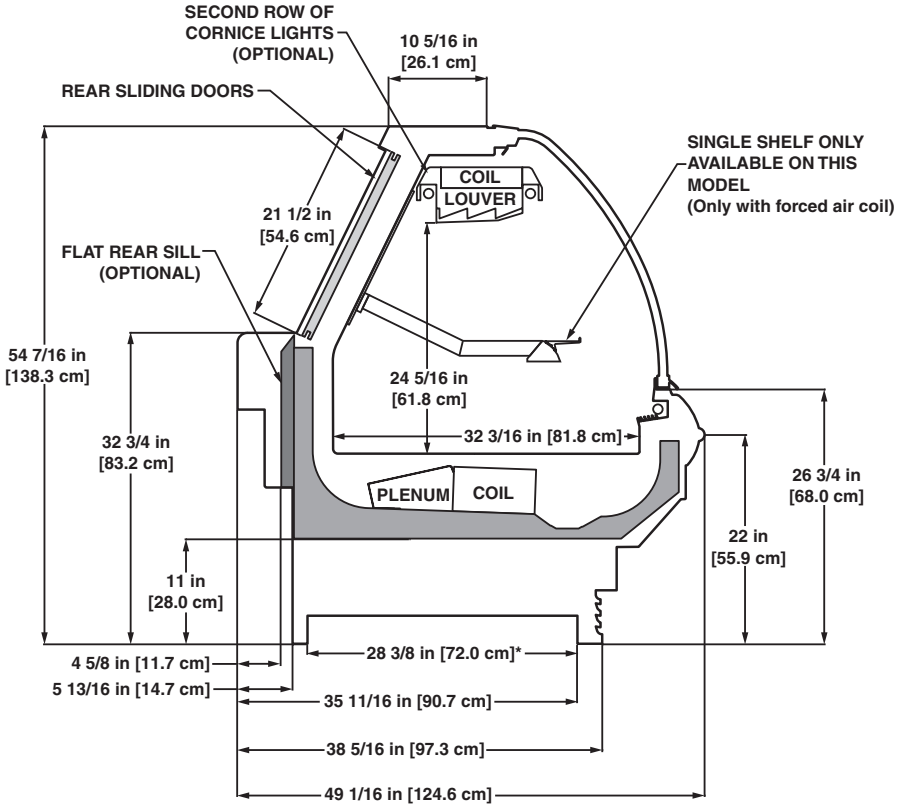

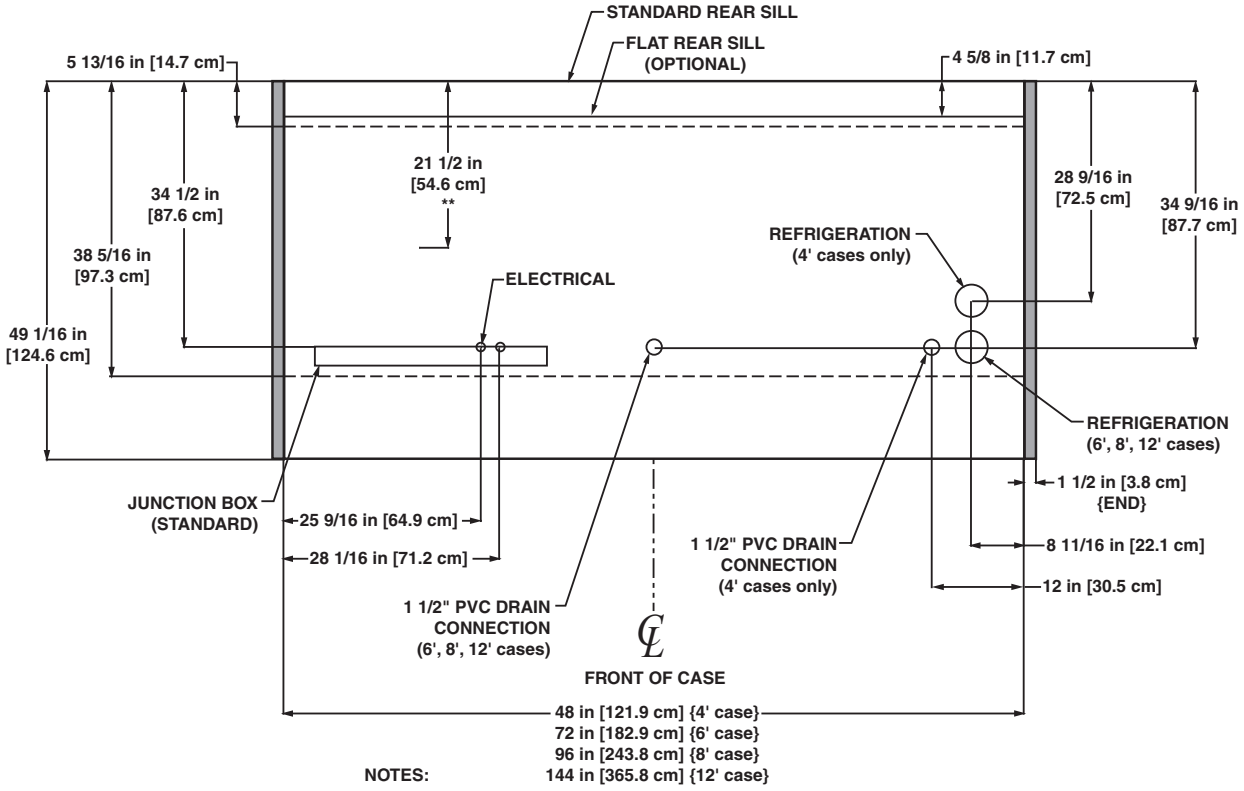

NOTES:

* STUB-UP AREA
** RECOMMENDED STUB-UP CENTERLINE FOR ELECTRICAL AND HUB DRAINS

- FRONT, REAR AND TOP SILL HEIGHTS VARY WITH BASEFRAME HEIGHT
- ENDS ADD APPROXIMATELY 1 INCH TO CASE HEIGHT
- SUCTION LINE - 7/8", LIQUID LINE - 1/2"
- AVAILABLE SHELF SIZES: 10" & 12"

NSF COMPONENT
c UL us

A DOVER COMPANY

OSAG
(7" BASEFRAME)

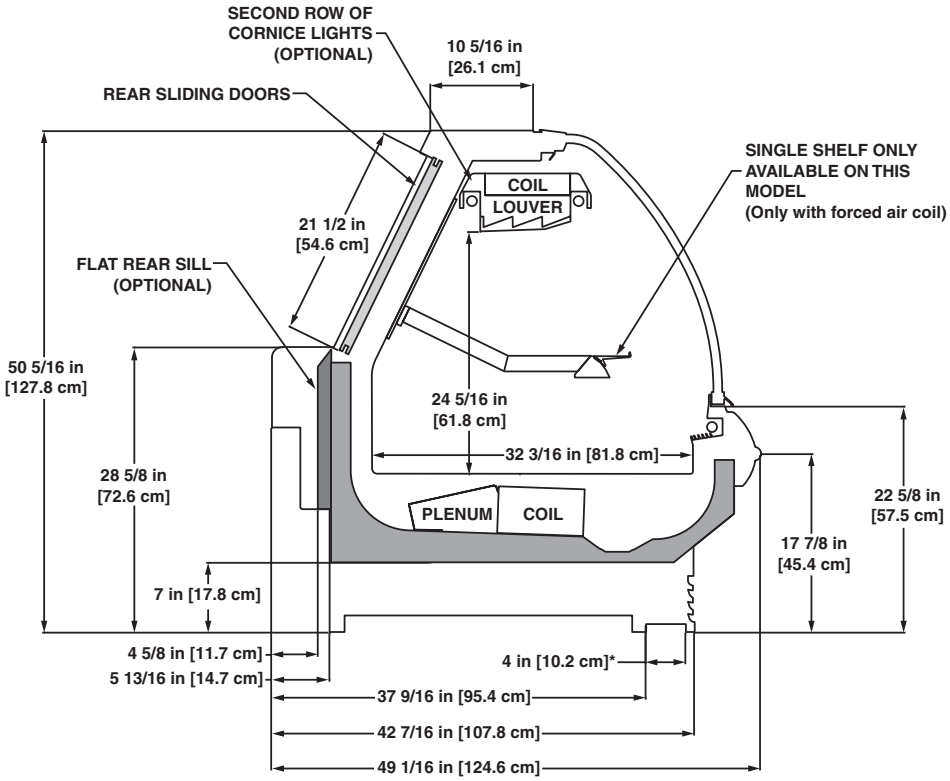

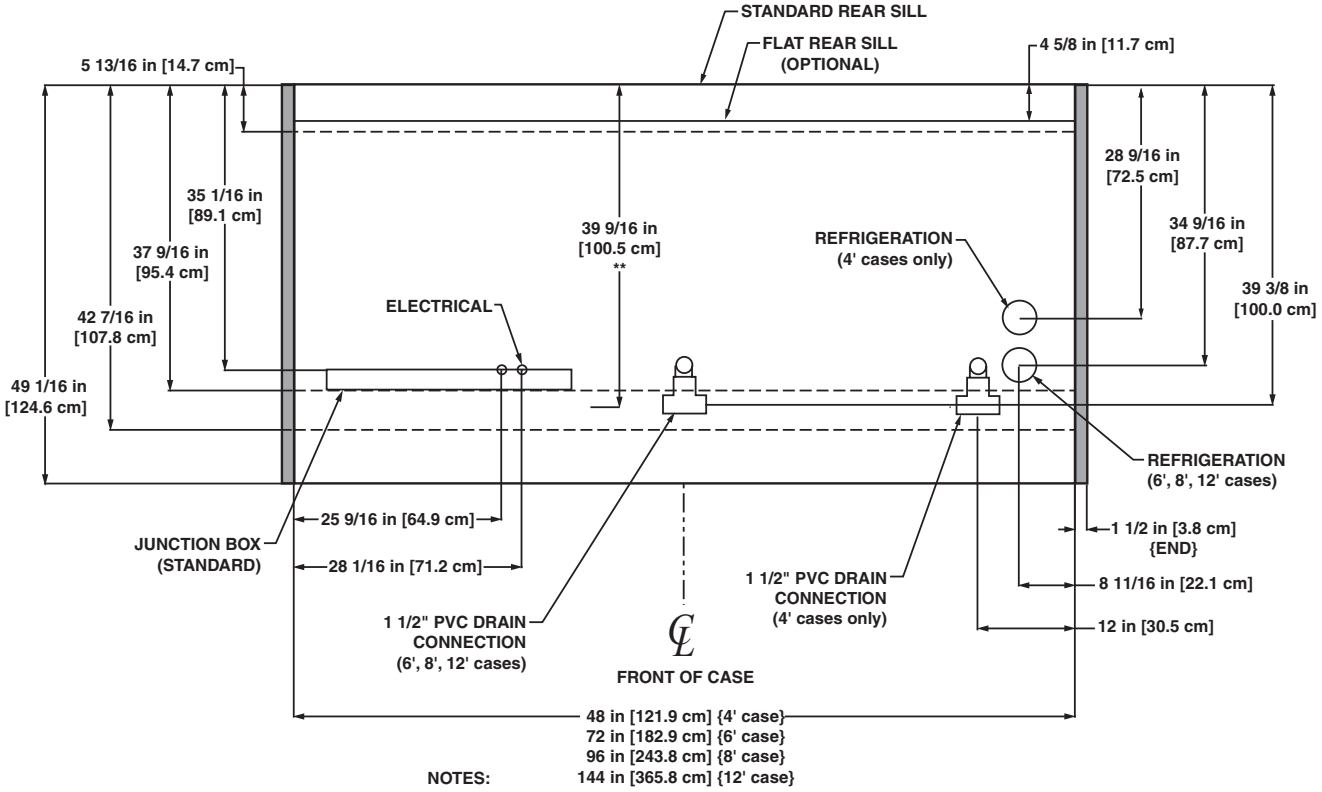

NOTES:

* STUB-UP AREA
** RECOMMENDED STUB-UP CENTERLINE FOR ELECTRICAL AND HUB DRAINS

- FRONT, REAR AND TOP SILL HEIGHTS VARY WITH BASEFRAME HEIGHT
- ENDS ADD APPROXIMATELY 1 INCH TO CASE HEIGHT
- SUCTION LINE - 7/8", LIQUID LINE - 1/2"
- AVAILABLE SHELF SIZES: 10" & 12"

NSF COMPONENT

A DOVER COMPANY

American Style Flat Glass Service Deli/Meat/Seafood Gravity Coil Merchandiser

OSGF - 4′, 6′, 8′ & 12′

Electrical Data

Model		Fans per Case	Standard Fans		High Efficiency Fans		Anti-Condensate Heaters		Defrost Heaters			
			120 Volts		120 Volts		120 Volts		208 Volts		240 Volts	
			Amps	Watts	Amps	Watts	Amps	Watts	Amps	Watts	Amps	Watts
OSGF	4′	2	0.68	34	0.30	22	1.48	178	- - -[1]	- - -	- - -	- - -
	6′	2	0.68	34	0.30	22	1.93	232	- - -	- - -	- - -	- - -
	8′	3	1.02	51	0.45	33	2.91	349	- - -	- - -	- - -	- - -
	12′	4	1.36	68	0.60	44	4.13	496	- - -	- - -	- - -	- - -

[1] NOTE: - - - not an option on this case model.

Lighting Data

Model		Bulbs per Row	Bulb Length	Typical per Light Row		Maximum Lighting	
				120 Volts		120 Volts	
				Amps	Watts	Amps	Watts
OSGF	4′	1	4′	0.23	28	1.17	140
	6′	2	3′	0.37	44	1.83	220
	8′	2	4′	0.47	56	2.33	280
	12′	3	4′	0.70	84	3.50	420

Guidelines & Control Settings

Model	BTUH/ft[2]	Evaporator (°F)	Superheat Set Point @ Bulb (°F)	Discharge Air (°F)	Return Air (°F)	Discharge Air Velocity[3] (FPM)
OSGF[4]	310	17	6-8	21	30	125

[2] BTUHs/ft listed are for parallel operation. Conventional ratings may be approximated by multiplying listed rating by 1.04.

[3] Average discharge air velocity at peak of defrost.

[4] A suction stop solenoid installed in the top coil's suction line is required for this case. Control of the solenoid can be achieved with a thermostat at the case or an external controller. A liquid line solenoid alone will not allow the case to cycle properly and is not recommended for control of this case. The thermostat probe should be located on the inlet of the top coil. The cut out temperature should be set to 30°F and the cut in temperature should be set to 35°F. These are recommended starting values and may need to be adjusted based on store conditions.

Defrost Controls

Model	Defrosts Per Day	Run-Off Time (min)	Electric Defrost		Timed Off Defrost		Hot Gas Defrost		Reverse Air Defrost	
			Fail-safe (min)	Termination Temp. (°F)	Fail-safe (min)	Termination Temp. (°F)	Fail-safe (min)	Termination Temp. (°F)	Fail-safe (min)	Termination Temp. (°F)
OSGF	2	6 - 8	- - -	- - -	65	46	20	45	- - -	- - -

Medium Temperature Defrost Schedule

No. Per Day	Hours
1	12 midnight
2	12 am - 12 pm
3	6 am - 2 pm - 10 pm
4	12 - 6 am - 12 - 6 pm

All measurements are taken per ARI 1200 - 2002 specifications.

NSF COMPONENT

c UL us

HILL PHOENIX EXCELLENCE

A DOVER COMPANY

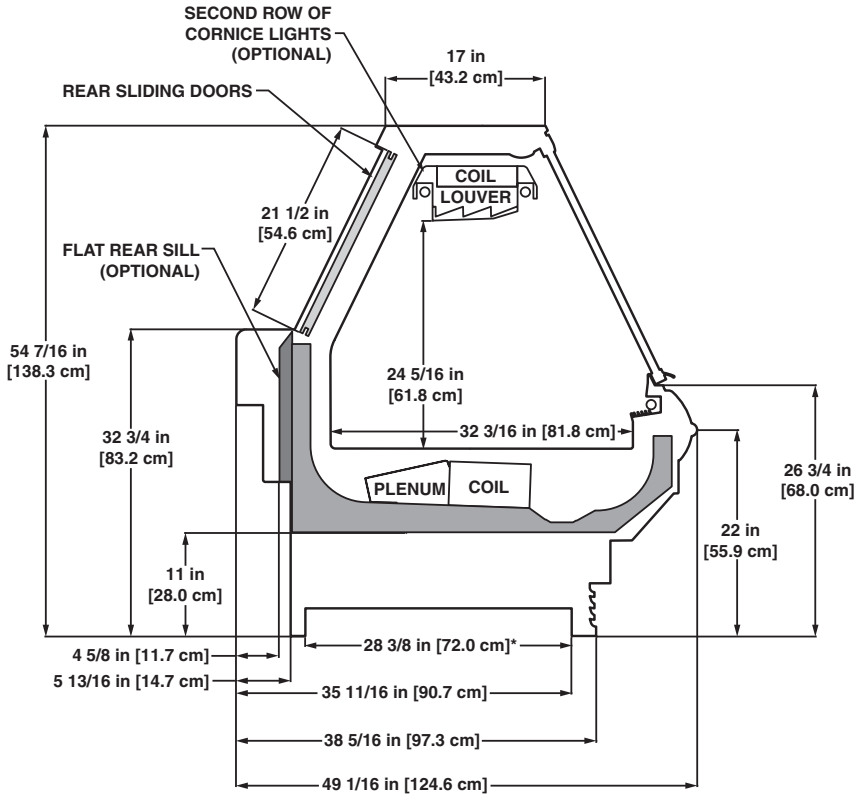

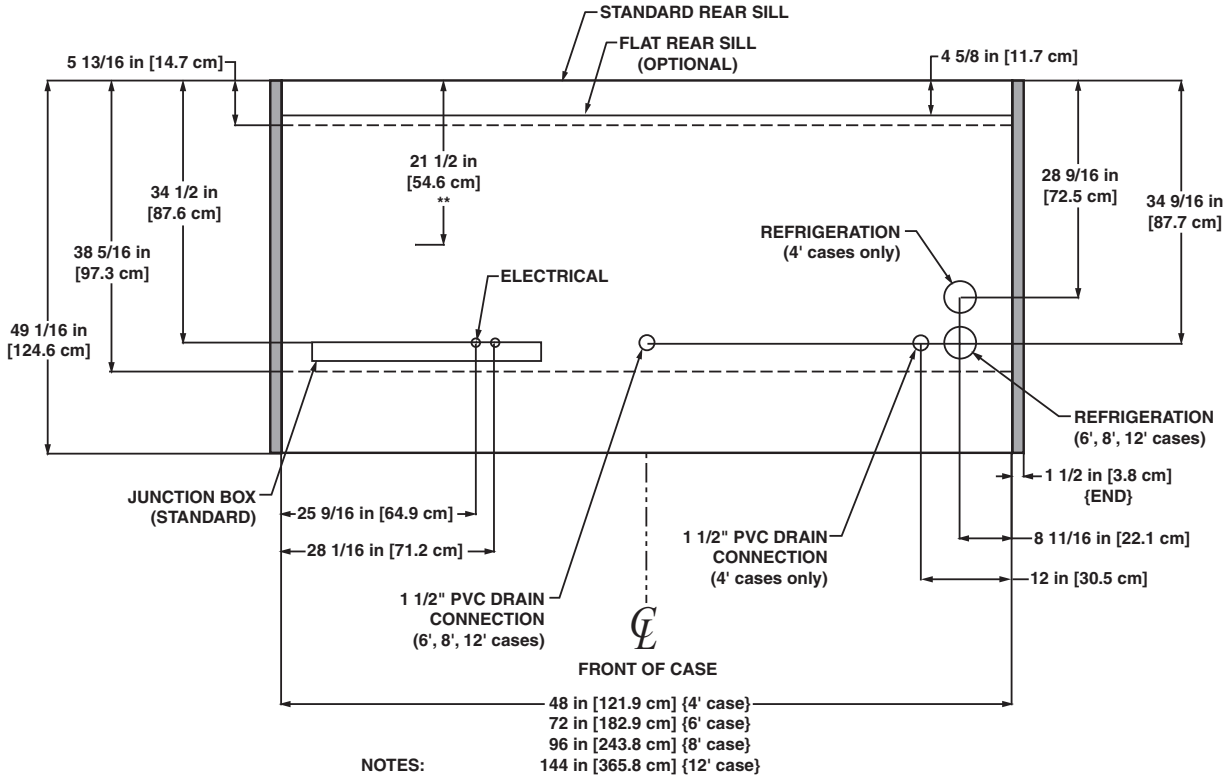

NOTES:

* STUB-UP AREA
** RECOMMENDED STUB-UP CENTERLINE FOR ELECTRICAL AND HUB DRAINS

- FRONT, REAR AND TOP SILL HEIGHTS VARY WITH BASEFRAME HEIGHT
- ENDS ADD APPROXIMATELY 1 INCH TO CASE HEIGHT
- SUCTION LINE - 7/8", LIQUID LINE - 1/2"

NSF COMPONENT c UL us

A DOVER COMPANY

OSGF
(7" BASEFRAME)

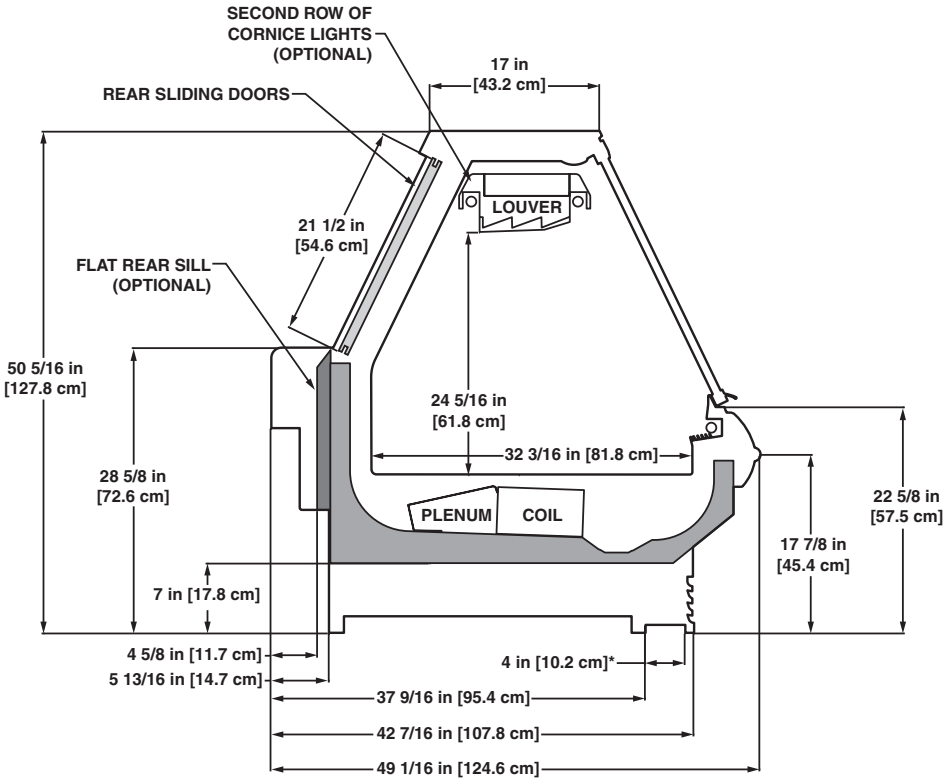

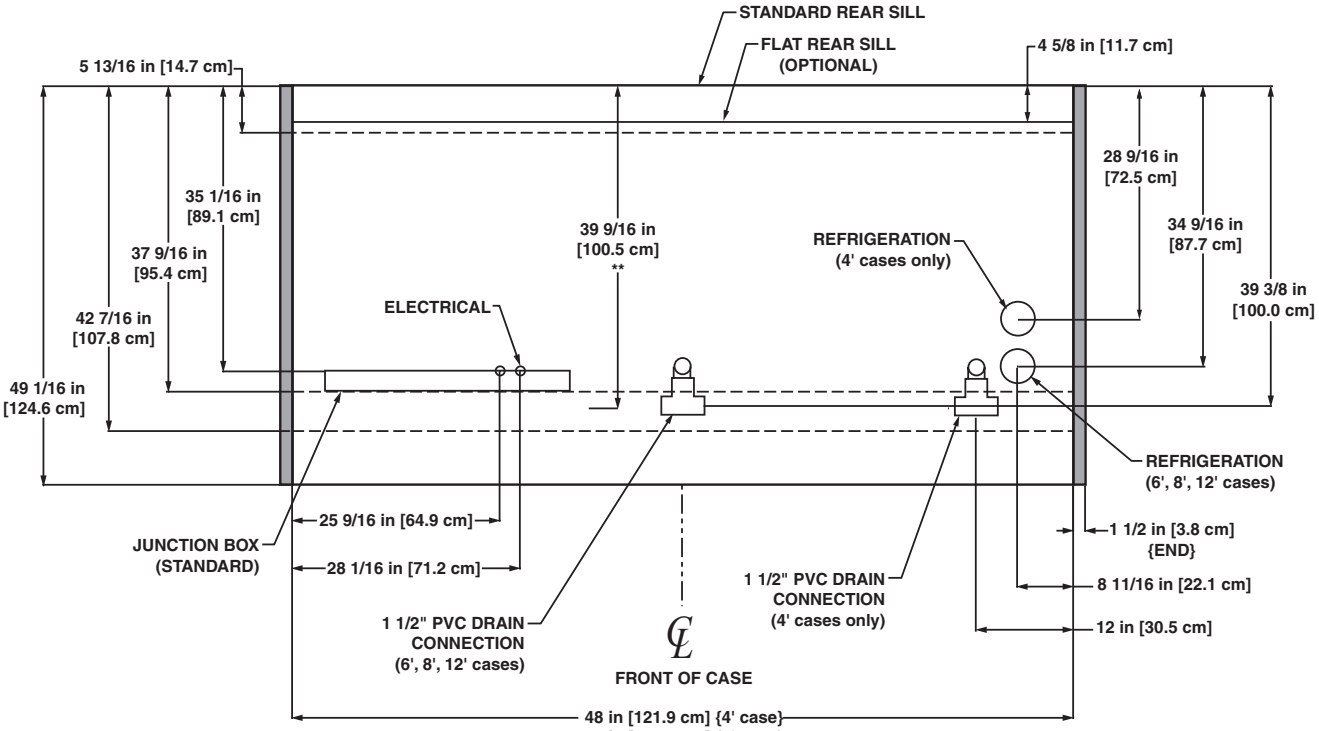

NOTES:

* STUB-UP AREA
** RECOMMENDED STUB-UP CENTERLINE FOR ELECTRICAL AND HUB DRAINS

- FRONT, REAR AND TOP SILL HEIGHTS VARY WITH BASEFRAME HEIGHT
- ENDS ADD APPROXIMATELY 1 INCH TO CASE HEIGHT
- SUCTION LINE - 7/8", LIQUID LINE - 1/2"

NSF COMPONENT

A DOVER COMPANY

American Style Vertical Glass Service Deli Merchandiser

OSM - 6′, 8′ & 12′

Electrical Data

Model		Fans per Case	Standard Fans 120 Volts Amps	Standard Fans 120 Volts Watts	High Efficiency Fans 120 Volts Amps	High Efficiency Fans 120 Volts Watts	Anti-Condensate Heaters 120 Volts Amps	Anti-Condensate Heaters 120 Volts Watts	Defrost Heaters 208 Volts Amps	Defrost Heaters 208 Volts Watts	Defrost Heaters 240 Volts Amps	Defrost Heaters 240 Volts Watts
OSM	6′	2	0.68	34	0.30	22	1.33	160	2.88	600	3.33	798
	8′	3	1.02	51	0.45	33	2.11	253	3.85	800	4.44	1065
	12′	4	1.36	68	0.60	44	2.93	352	5.77	1200	6.67	1600

Lighting Data

Model		Bulbs per Row	Bulb Length	Typical per Light Row 120 Volts Amps	Typical per Light Row 120 Volts Watts	Maximum Lighting 120 Volts Amps	Maximum Lighting 120 Volts Watts
OSM	6′	2	3′	0.37	44	1.48	178
	8′	2	4′	0.47	56	1.88	226
	12′	3	4′	0.70	84	2.80	336

Guidelines & Control Settings

Model	BTUH/ft[1]	Evaporator (°F)	Superheat Set Point @ Bulb (°F)	Discharge Air (°F)	Return Air (°F)	Discharge Air Velocity[2] (FPM)
OSM	320	22	6-8	30	39	235

[1] BTUHs/ft listed are for parallel operation. Conventional ratings may be approximated by multiplying listed rating by 1.04.

[2] Average discharge air velocity at peak of defrost.

Defrost Controls

Model	Defrosts Per Day	Run-Off Time (min)	Electric Defrost Fail-safe (min)	Electric Defrost Termination Temp. (°F)	Timed Off Defrost Fail-safe (min)	Timed Off Defrost Termination Temp. (°F)	Hot Gas Defrost Fail-safe (min)	Hot Gas Defrost Termination Temp. (°F)	Reverse Air Defrost Fail-safe (min)	Reverse Air Defrost Termination Temp. (°F)
OSM	2	6 - 8	35	50	75[3]	50[3]	20	45	- - -[4]	- - -

[3] Not recommended on this model due to long defrost time.

[4] NOTE: - - - not an option on this case model.

Medium Temperature Defrost Schedule

No. Per Day	Hours
1	12 midnight
2	12 am - 12 pm
3	6 am - 2 pm - 10 pm
4	12 - 6 am - 12 - 6 pm

All measurements are taken per ARI 1200 - 2002 specifications.

NSF COMPONENT

c UL us

HILL PHOENIX EXCELLENCE

A DOVER COMPANY

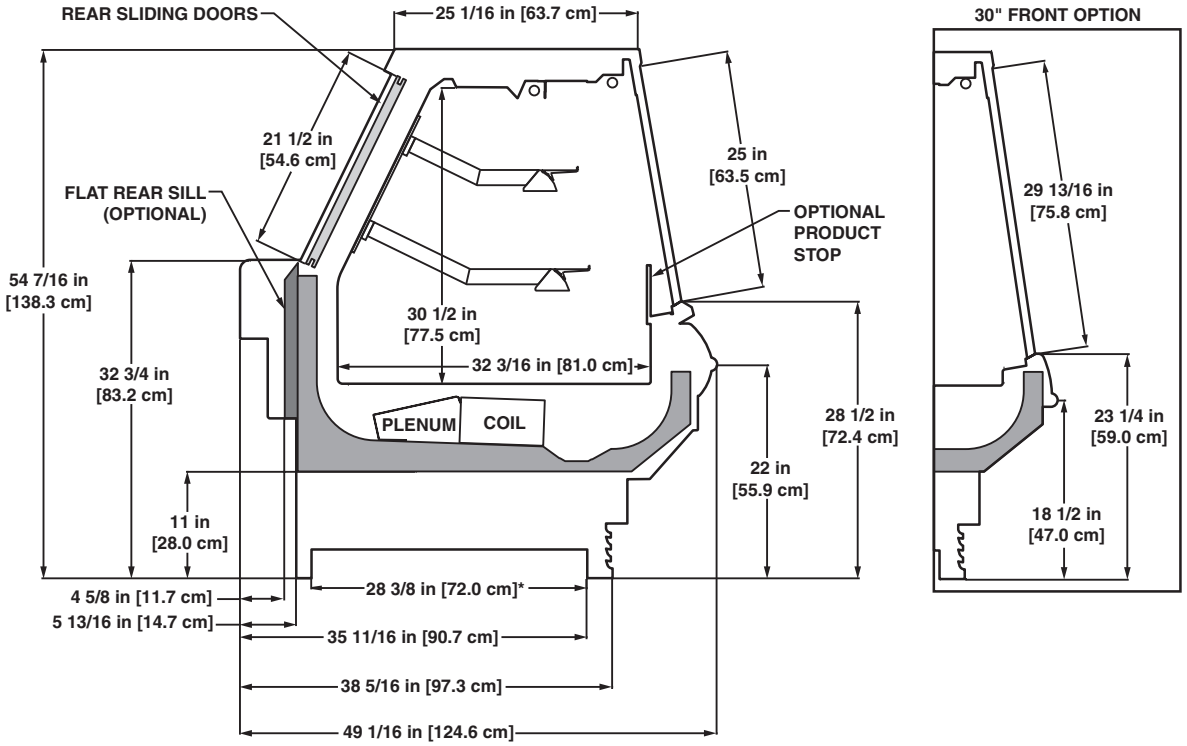

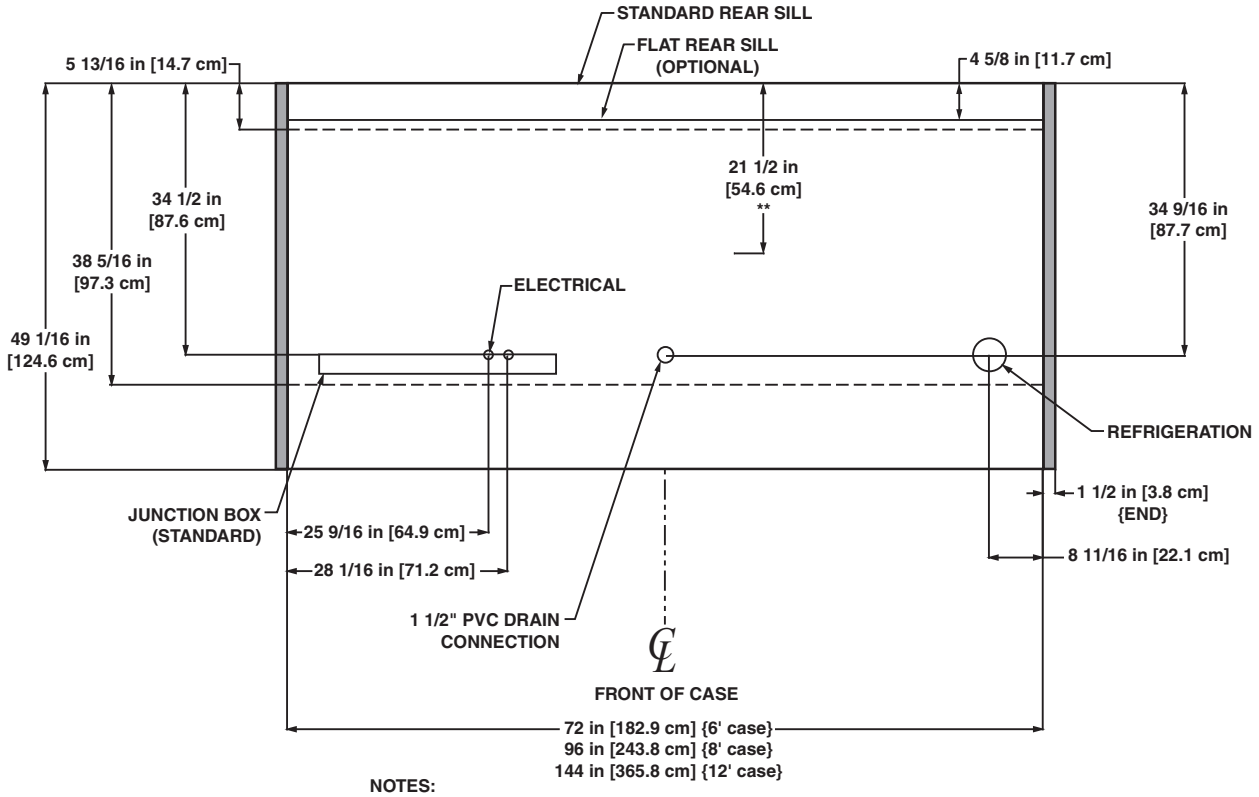

NOTES:

* STUB-UP AREA
** RECOMMENDED STUB-UP CENTERLINE FOR ELECTRICAL AND HUB DRAINS

- FRONT, REAR AND TOP SILL HEIGHTS VARY WITH BASEFRAME HEIGHT
- ENDS ADD APPROXIMATELY 1 INCH TO CASE HEIGHT
- SUCTION LINE - 7/8", LIQUID LINE - 1/2"

NSF COMPONENT c UL us

A DOVER COMPANY

OSM
(7" BASEFRAME)

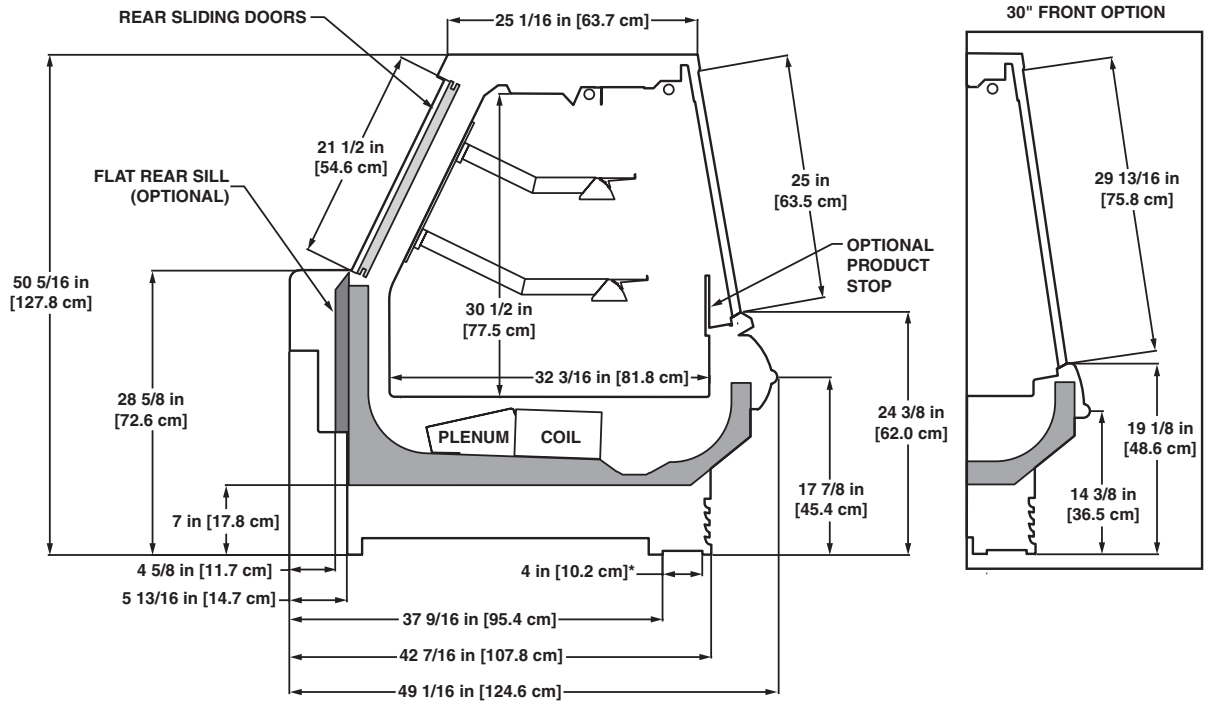

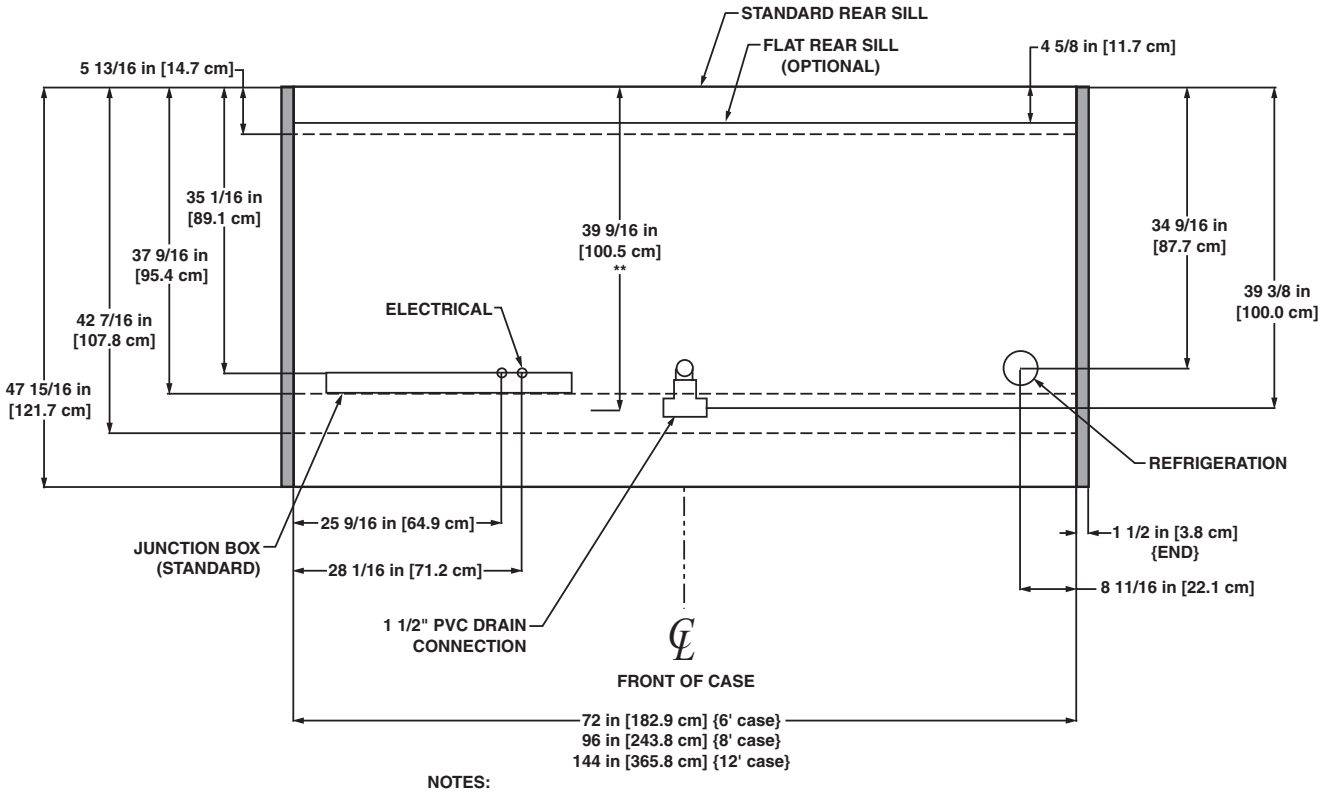

NOTES:

* STUB-UP AREA
** RECOMMENDED STUB-UP CENTERLINE FOR ELECTRICAL AND HUB DRAINS

- FRONT, REAR AND TOP SILL HEIGHTS VARY WITH BASEFRAME HEIGHT
- ENDS ADD APPROXIMATELY 1 INCH TO CASE HEIGHT
- SUCTION LINE - 7/8", LIQUID LINE - 1/2"
- AVAILABLE SHELF SIZES: 10" & 12"

NSF COMPONENT

A DOVER COMPANY

American Style Vertical Glass Service Deli/Meat/Seafood Gravity Coil Merchandiser

OGM - 6′, 8′ & 12′

Electrical Data

Model		Fans per Case	Standard Fans 120 Volts Amps	Standard Fans 120 Volts Watts	High Efficiency Fans 120 Volts Amps	High Efficiency Fans 120 Volts Watts	Anti-Condensate Heaters 120 Volts Amps	Anti-Condensate Heaters 120 Volts Watts	Defrost Heaters 208 Volts Amps	Defrost Heaters 208 Volts Watts	Defrost Heaters 240 Volts Amps	Defrost Heaters 240 Volts Watts
OGM	6′	NA[1]	- - -[2]	- - -	- - -	- - -	1.93	232	- - -	- - -	- - -	- - -
	8′	NA	- - -	- - -	- - -	- - -	2.91	349	- - -	- - -	- - -	- - -
	12′	NA	- - -	- - -	- - -	- - -	4.13	496	- - -	- - -	- - -	- - -

[1] Not applicable.

[2] NOTE: - - - not an option on this case model.

Lighting Data

Model		Bulbs per Row	Bulb Length	Typical per Light Row 120 Volts Amps	Typical per Light Row 120 Volts Watts	Maximum Lighting 120 Volts Amps	Maximum Lighting 120 Volts Watts
OGM	6′	2	3′	0.37	44	1.48	178
	8′	2	4′	0.47	56	1.88	226
	12′	3	4′	0.70	84	2.80	336

Guidelines & Control Settings

Model	BTUH/ft[3]	Evaporator (°F)	Superheat Set Point @ Bulb (°F)	Discharge Air (°F)	Return Air (°F)	Discharge Air Velocity[4] (FPM)
OGM[5]	226	17	6-8	NA	NA	NA

[3] BTUHs/ft listed are for parallel operation. Conventional ratings may be approximated by multiplying listed rating by 1.04.

[4] Average discharge air velocity at peak of defrost.

[5] If the OGM is piped to a suction header lower than 15°F an EPR with a suction stop solenoid is required. If a suction stop solenoid is not provided at the rack a suction stop solenoid is required at the case. A liquid line solenoid alone will not allow the case to cycle properly and is not recommended for control of this case. The thermostat probe should be located on the inlet of the top coil. The cut out point should be set to 17°F and the cut in point should be set so that refrigeration starts as soon as the top coil ice starts to drip.

Defrost Controls

Model	Defrosts Per Day	Run-Off Time (min)	Electric Defrost Fail-safe (min)	Electric Defrost Termination Temp. (°F)	Timed Off Defrost Fail-safe (min)	Timed Off Defrost Termination Temp. (°F)	Hot Gas Defrost Fail-safe (min)	Hot Gas Defrost Termination Temp. (°F)	Reverse Air Defrost Fail-safe (min)	Reverse Air Defrost Termination Temp. (°F)
OGM	2	6 - 8	- - -	- - -	65	46	20	45	- - -	- - -

Medium Temperature Defrost Schedule

No. Per Day	Hours
1	12 midnight
2	12 am - 12 pm
3	6 am - 2 pm - 10 pm
4	12 - 6 am - 12 - 6 pm

All measurements are taken per ARI 1200 - 2002 specifications.

6/07

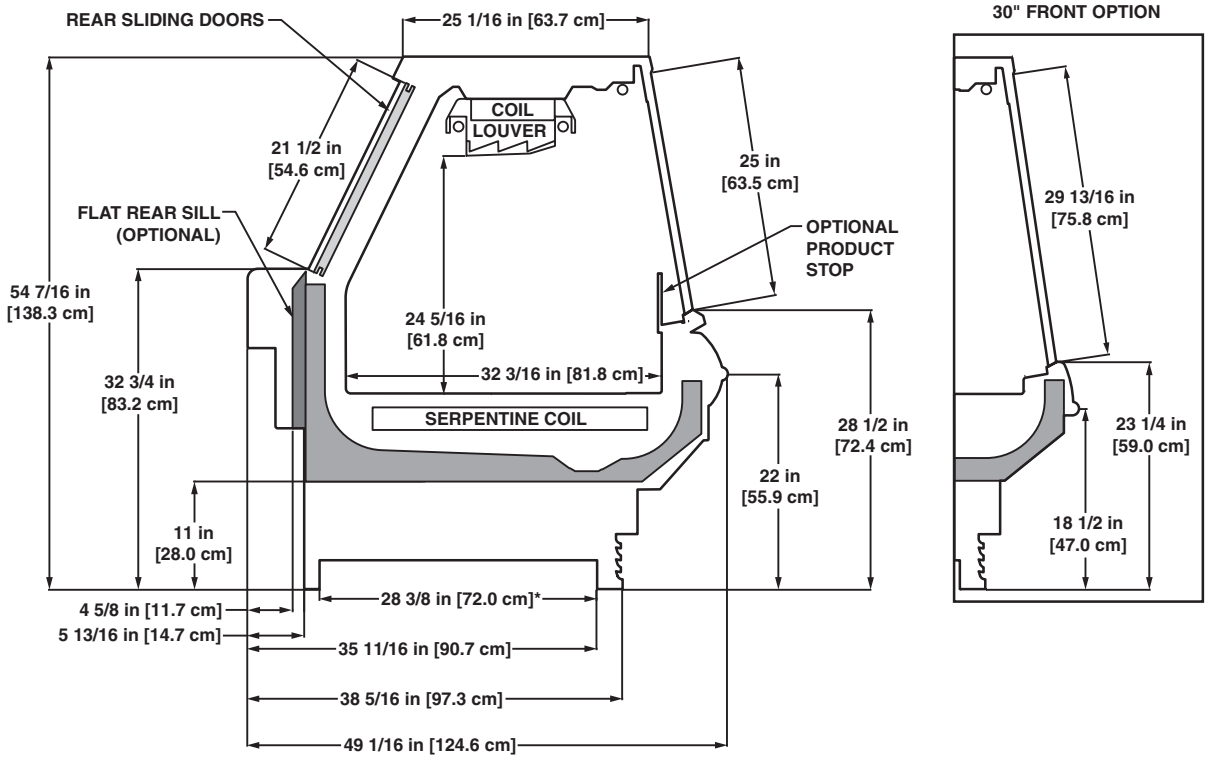

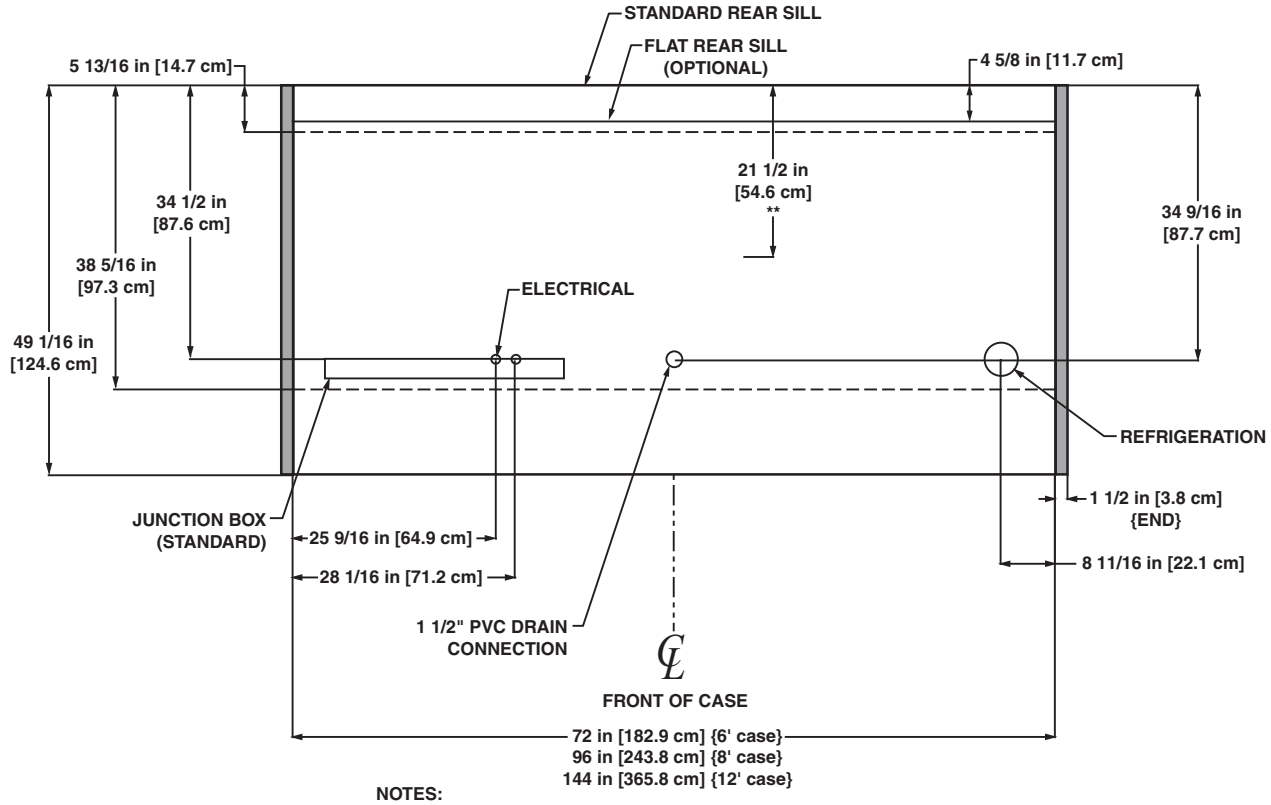

NOTES:

* STUB-UP AREA
** RECOMMENDED STUB-UP CENTERLINE FOR ELECTRICAL AND HUB DRAINS

- FRONT, REAR AND TOP SILL HEIGHTS VARY WITH BASEFRAME HEIGHT
- ENDS ADD APPROXIMATELY 1 INCH TO CASE HEIGHT
- SUCTION LINE - 7/8", LIQUID LINE - 1/2"

NSF COMPONENT c UL us

A DOVER COMPANY

OGM
(7" BASEFRAME)

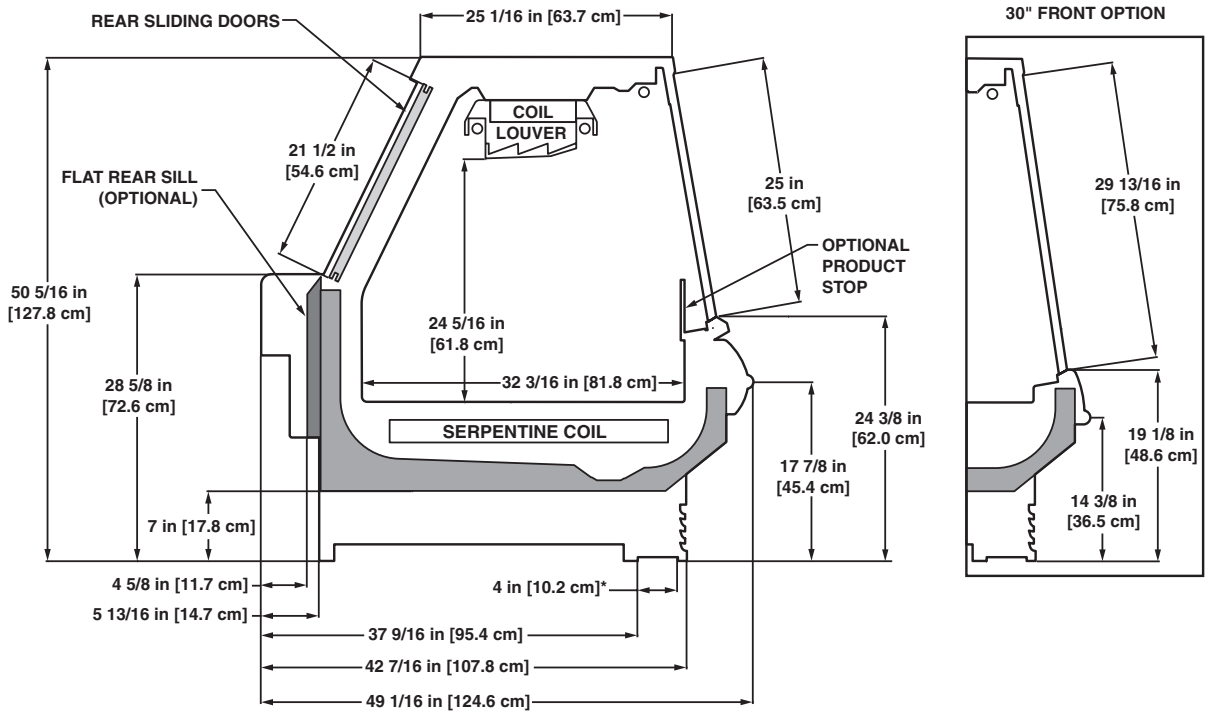

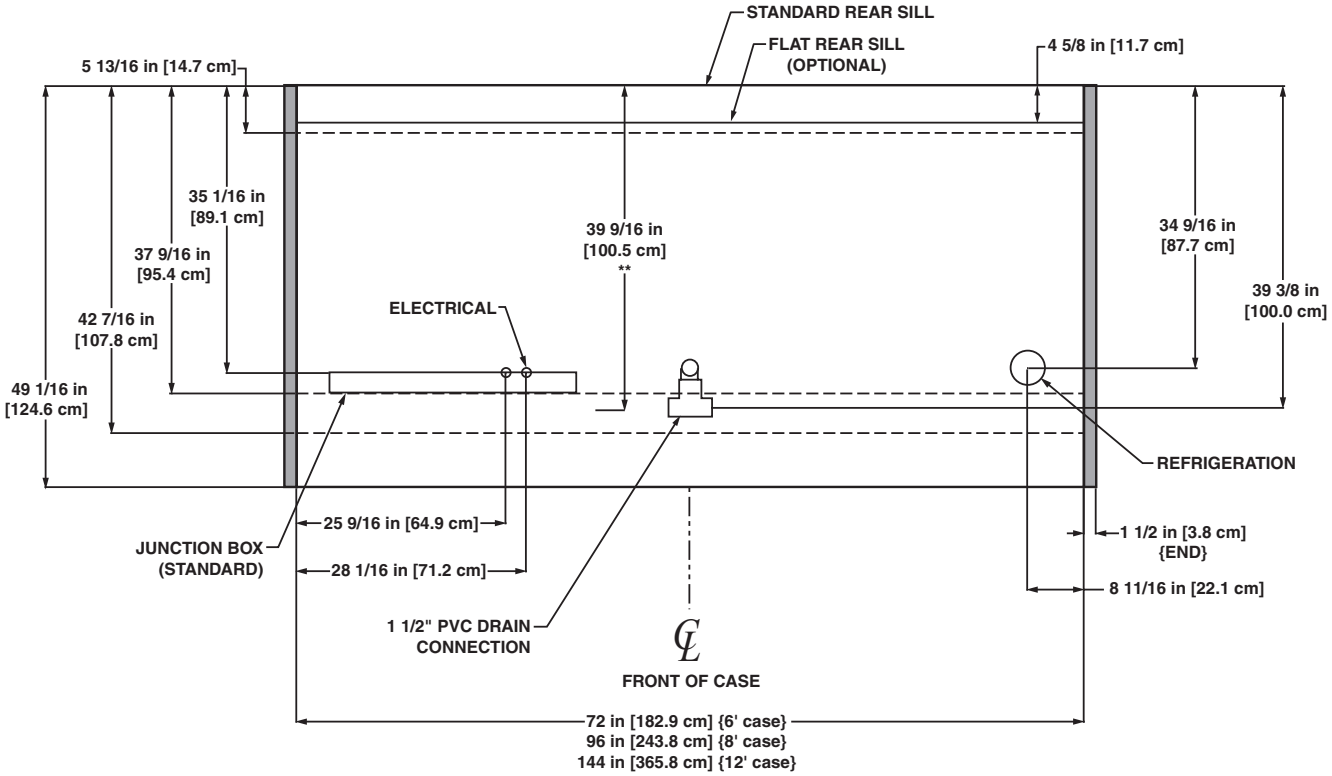

NOTES:

* STUB-UP AREA
** RECOMMENDED STUB-UP CENTERLINE FOR ELECTRICAL AND HUB DRAINS

- FRONT, REAR AND TOP SILL HEIGHTS VARY WITH BASEFRAME HEIGHT
- ENDS ADD APPROXIMATELY 1 INCH TO CASE HEIGHT
- SUCTION LINE - 7/8", LIQUID LINE - 1/2"

NSF COMPONENT

A DOVER COMPANY

American Style Flat Glass Service Frozen Food Merchandiser

OSMLZ - 4′ & 6′

Electrical Data

Model		Fans per Case	Standard Fans 120 Volts Amps	Standard Fans 120 Volts Watts	High Efficiency Fans 120 Volts Amps	High Efficiency Fans 120 Volts Watts	Anti-Condensate Heaters 120 Volts Amps	Anti-Condensate Heaters 120 Volts Watts	Defrost Heaters 208 Volts Amps	Defrost Heaters 208 Volts Watts	Defrost Heaters 240 Volts Amps	Defrost Heaters 240 Volts Watts
OSMLZ	4′	2	0.68	34	0.30	22	1.09	131	3.85	800	4.43	1064
	6′	2	0.68	34	0.30	22	1.53	184	5.77	1200	6.65	1596

Lighting Data

Model		Bulbs per Row	Bulb Length	Typical per Light Row 120 Volts Amps	Typical per Light Row 120 Volts Watts	Maximum Lighting 120 Volts Amps	Maximum Lighting 120 Volts Watts
OSMLZ	4′	1	3′	0.19	23	0.38	46
	6′	1	5′	0.28	34	0.56	67

Guidelines & Control Settings

Model	BTUH/ft[1]	Coil Type	Evaporator (°F)	Superheat Set Point @ Bulb (°F)	Discharge Air (°F)	Return Air (°F)	Discharge Air Velocity[2] (FPM)
OSMLZ	230	Enh.	-10	3-5	5	15	120

[1] BTUH's/ft listed are for parallel operation. Conventional ratings may be approximated by multiplying listed rating by 1.04.

[2] Average discharge air velocity at peak of defrost.

Defrost Controls

Model	Defrosts Per Day	Run-Off Time (min)	Electric Defrost Fail-safe (min)	Electric Defrost Termination Temp. (°F)	Timed Off Defrost Fail-safe (min)	Timed Off Defrost Termination Temp. (°F)	Hot Gas Defrost Fail-safe (min)	Hot Gas Defrost Termination Temp. (°F)	Reverse Air Defrost Fail-safe (min)	Reverse Air Defrost Termination Temp. (°F)
OSMLZ	2	13 - 15	45	48	- - -[3]	- - -	20	60	- - -	- - -

[3] NOTE: - - - not an option on this case model.

Low Temperature Defrost Schedule

No. Per Day	Hours
1	10 pm
2	6 am - 10 pm**

All measurements are taken per ARI 1200 - 2002 specifications.

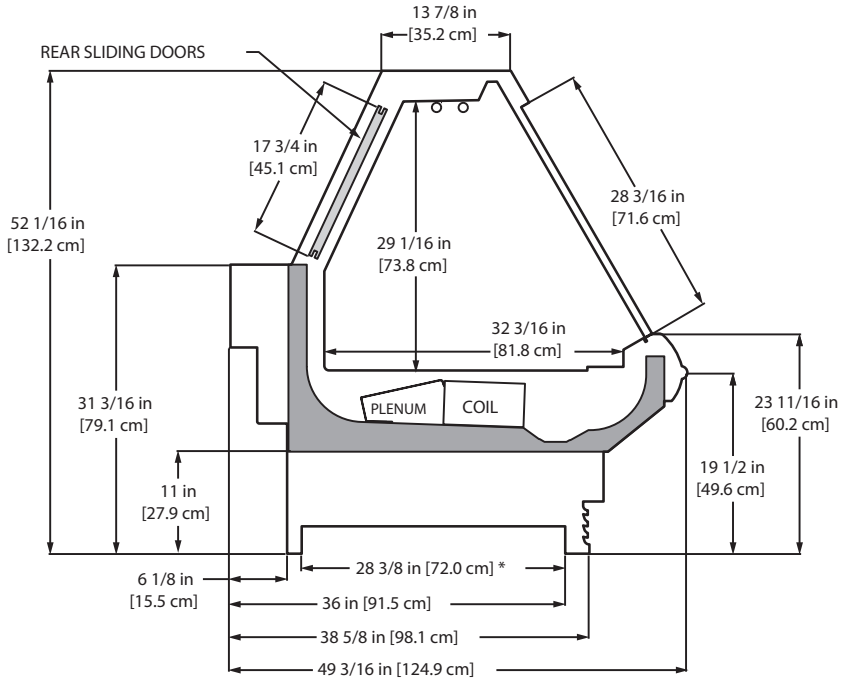

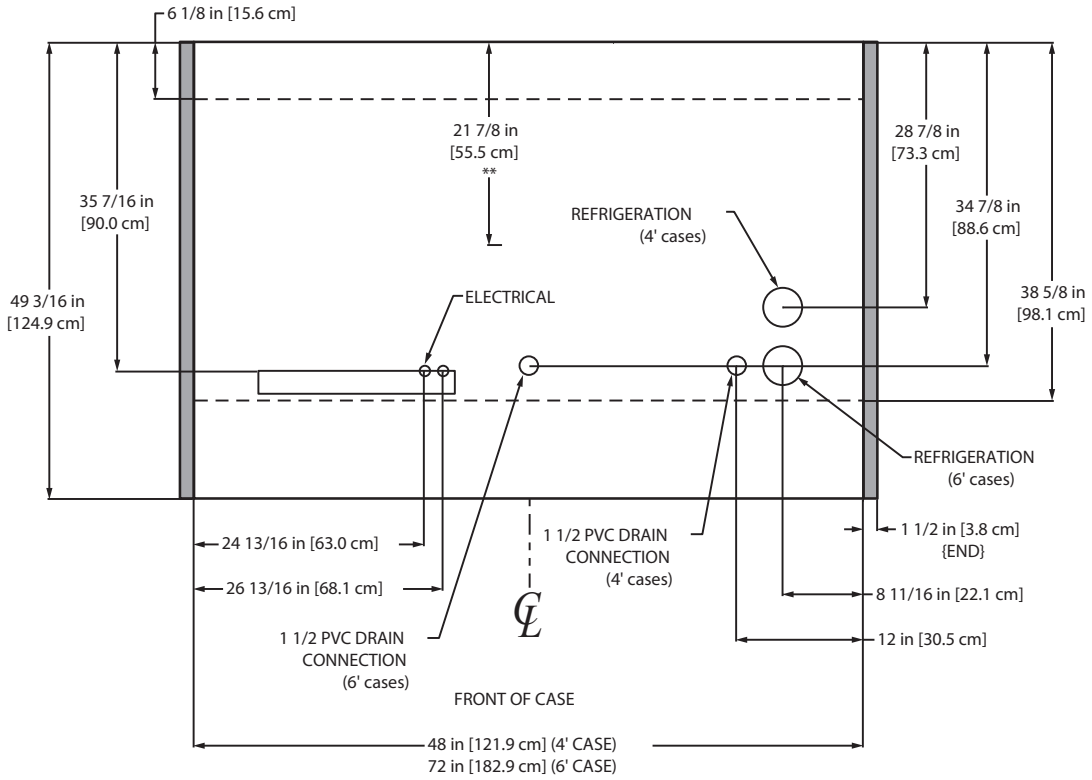

NOTES:

* STUB-UP AREA
** RECOMMENDED STUB-UP CENTERLINE FOR ELECTRICAL AND HUB DRAINS

- FRONT, REAR AND TOP SILL HEIGHTS VARY WITH BASEFRAME HEIGHT
- ENDS ADD APPROXIMATELY 1 INCH TO CASE HEIGHT
- SUCTION LINE - 7/8", LIQUID LINE - 3/8"

NSF COMPONENT c UL us

A DOVER COMPANY

International Style Single Deck Deli/Meat/Seafood Merchandiser

OSIO - 4′, 6′, 8′ & 12′

Electrical Data

Model		Fans per Case	Standard Fans 120 Volts Amps	Standard Fans 120 Volts Watts	High Efficiency Fans 120 Volts Amps	High Efficiency Fans 120 Volts Watts	Anti-Condensate Heaters 120 Volts Amps	Anti-Condensate Heaters 120 Volts Watts	Defrost Heaters 208 Volts Amps	Defrost Heaters 208 Volts Watts	Defrost Heaters 240 Volts Amps	Defrost Heaters 240 Volts Watts
OSIO	4′	2	0.68	34	0.30	22	0.77	92	1.92	400	2.22	532
	6′	2	0.68	34	0.30	22	1.39	167	2.88	600	3.33	798
	8′	3	1.02	51	0.45	33	1.50	180	3.85	800	4.44	1065
	12′	4	1.36	68	0.60	44	2.22	266	5.77	1200	6.67	1600

Lighting Data

Model		Bulbs per Row	Bulb Length	Typical per Light Row 120 Volts Amps	Typical per Light Row 120 Volts Watts	Maximum Lighting 120 Volts Amps	Maximum Lighting 120 Volts Watts
OSIO	4′	1	4′	0.23	28	0.23	28
	6′	2	3′	0.37	44	0.37	44
	8′	2	4′	0.47	56	0.47	56
	12′	3	4′	0.70	84	0.70	84

Guidelines & Control Settings

Model	BTUH/ft[1]	Evaporator (°F)	Superheat Set Point @ Bulb (°F)	Discharge Air (°F)	Return Air (°F)	Discharge Air Velocity[2] (FPM)
OSIO	695	17	6-8	24	33	180

[1] BTUHs/ft listed are for parallel operation. Conventional ratings may be approximated by multiplying listed rating by 1.04.

[2] Average discharge air velocity at peak of defrost.

Defrost Controls

Model	Defrosts Per Day	Run-Off Time (min)	Electric Defrost Fail-safe (min)	Electric Defrost Termination Temp. (°F)	Timed Off Defrost Fail-safe (min)	Timed Off Defrost Termination Temp. (°F)	Hot Gas Defrost Fail-safe (min)	Hot Gas Defrost Termination Temp. (°F)	Reverse Air Defrost Fail-safe (min)	Reverse Air Defrost Termination Temp. (°F)
OSIO	3	6 - 8	35	47	55	47	26	45	- - -[3]	- - -

[3] NOTE: - - - not an option on this case model.

Medium Temperature Defrost Schedule

No. Per Day	Hours
1	12 midnight
2	12 am - 12 pm
3	6 am - 2 pm - 10 pm
4	12 - 6 am - 12 - 6 pm

All measurements are taken per ARI 1200 - 2002 specifications.

NSF COMPONENT
c UL us
Hill PHOENIX EXCELLENCE
A DOVER COMPANY

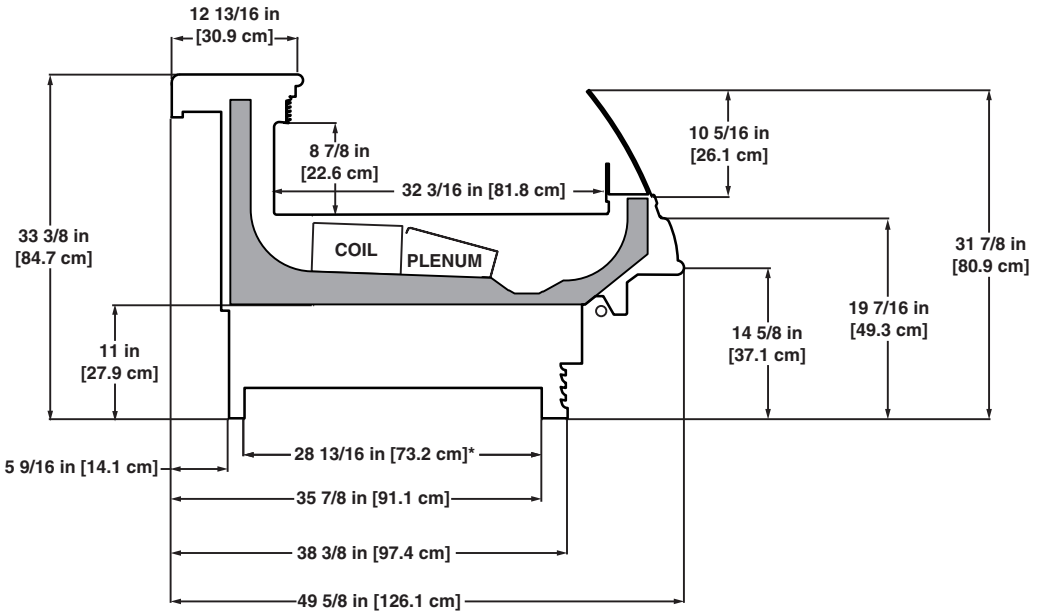

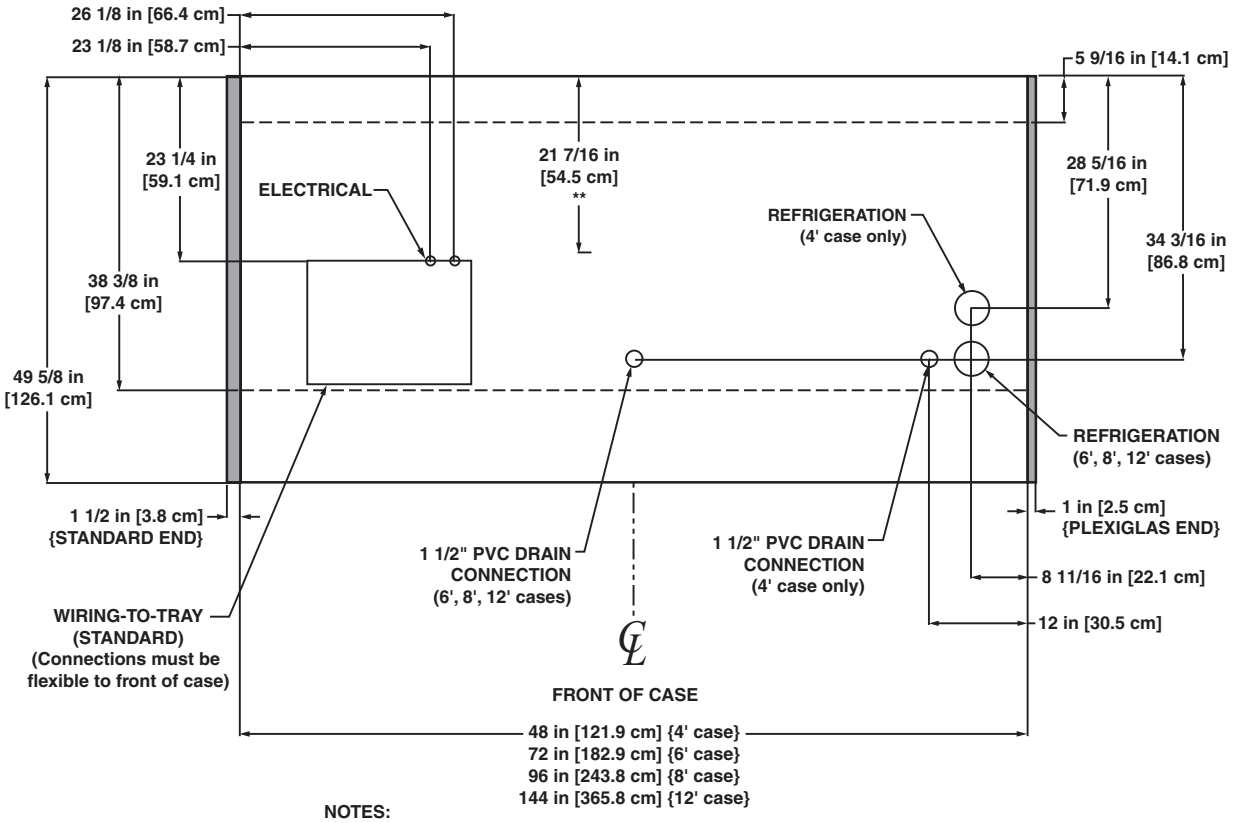

NOTES:

* STUB-UP AREA
** RECOMMENDED STUB-UP CENTERLINE FOR ELECTRICAL AND HUB DRAINS

- FRONT AND REAR SILL HEIGHTS VARY WITH BASEFRAME HEIGHT
- ENDS ADD APPROXIMATELY 1 INCH TO CASE HEIGHT
- SUCTION LINE - 7/8", LIQUID LINE - 1/2"

NSF COMPONENT c UL us

A DOVER COMPANY

Wide International Style Single Deck Deli/Meat/Seafood Merchandiser

OWSIO - 4′, 6′, 8′ & 12′

Electrical Data

Model		Fans per Case	Standard Fans 120 Volts Amps	Standard Fans 120 Volts Watts	High Efficiency Fans 120 Volts Amps	High Efficiency Fans 120 Volts Watts	Anti-Condensate Heaters 120 Volts Amps	Anti-Condensate Heaters 120 Volts Watts	Defrost Heaters 208 Volts Amps	Defrost Heaters 208 Volts Watts	Defrost Heaters 240 Volts Amps	Defrost Heaters 240 Volts Watts
OWSIO	4′	2	0.68	34	0.30	22	0.77	92	1.92	400	2.22	532
	6′	2	0.68	34	0.30	22	1.39	167	2.88	600	3.33	798
	8′	3	1.02	51	0.45	33	1.50	180	3.85	800	4.44	1065
	12′	4	1.36	68	0.60	44	2.22	266	5.77	1200	6.67	1600

Lighting Data

Model		Bulbs per Row	Bulb Length	Typical per Light Row 120 Volts Amps	Typical per Light Row 120 Volts Watts	Maximum Lighting 120 Volts Amps	Maximum Lighting 120 Volts Watts
OWSIO	4′	1	4′	0.23	28	0.23	28
	6′	2	3′	0.37	44	0.37	44
	8′	2	4′	0.47	56	0.47	56
	12′	3	4′	0.70	84	0.70	84

Guidelines & Control Settings

Model	BTUH/ft[1]	Evaporator (°F)	Superheat Set Point @ Bulb (°F)	Discharge Air (°F)	Return Air (°F)	Discharge Air Velocity[2] (FPM)
OWSIO	795	17	6-8	24	33	180

[1] BTUHs/ft listed are for parallel operation. Conventional ratings may be approximated by multiplying listed rating by 1.04.

[2] Average discharge air velocity at peak of defrost.

Defrost Controls

Model	Defrosts Per Day	Run-Off Time (min)	Electric Defrost Fail-safe (min)	Electric Defrost Termination Temp. (°F)	Timed Off Defrost Fail-safe (min)	Timed Off Defrost Termination Temp. (°F)	Hot Gas Defrost Fail-safe (min)	Hot Gas Defrost Termination Temp. (°F)	Reverse Air Defrost Fail-safe (min)	Reverse Air Defrost Termination Temp. (°F)
OWSIO	3	6 - 8	35	47	55	47	26	45	- - -[3]	- - -

[3] NOTE: - - - not an option on this case model.

Medium Temperature Defrost Schedule

No. Per Day	Hours
1	12 midnight
2	12 am - 12 pm
3	6 am - 2 pm - 10 pm
4	12 - 6 am - 12 - 6 pm

All measurements are taken per ARI 1200 - 2002 specifications.

NSF COMPONENT

c UL us

Hill PHOENIX EXCELLENCE

A DOVER COMPANY

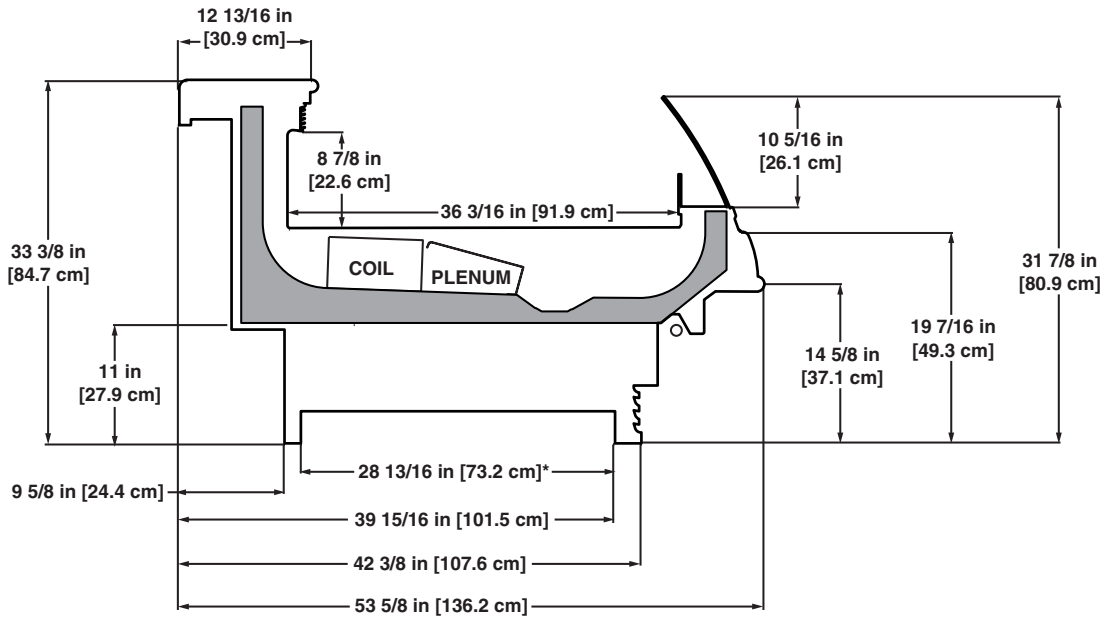

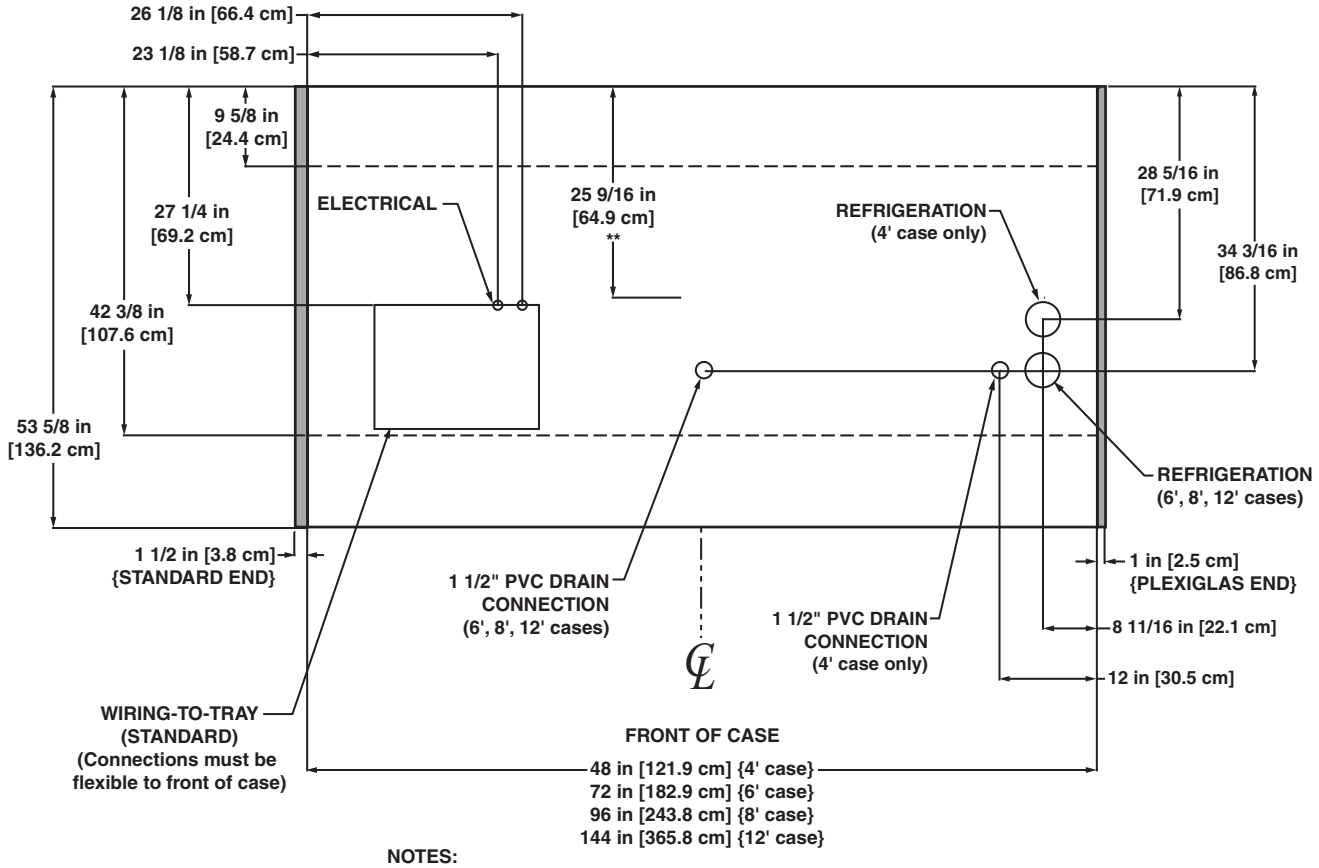

NOTES:

* STUB-UP AREA
** RECOMMENDED STUB-UP CENTERLINE FOR ELECTRICAL AND HUB DRAINS

- FRONT AND REAR SILL HEIGHTS VARY WITH BASEFRAME HEIGHT
- ENDS ADD APPROXIMATELY 1 INCH TO CASE HEIGHT
- SUCTION LINE - 7/8", LIQUID LINE - 1/2"

NSF COMPONENT c UL us

A DOVER COMPANY

International Style Service Deli/Meat/Seafood Merchandiser

OSI - 4′, 6′, 8′ & 12′

Electrical Data

Model		Fans per Case	Standard Fans 120 Volts Amps	Standard Fans 120 Volts Watts	High Efficiency Fans 120 Volts Amps	High Efficiency Fans 120 Volts Watts	Anti-Condensate Heaters 120 Volts Amps	Anti-Condensate Heaters 120 Volts Watts	Defrost Heaters 208 Volts Amps	Defrost Heaters 208 Volts Watts	Defrost Heaters 240 Volts Amps	Defrost Heaters 240 Volts Watts
OSI	4′	2	0.68	34	0.30	22	0.55	66	1.92	400	2.22	532
	6′	2	0.68	34	0.30	22	1.03	124	2.88	600	3.33	798
	8′	3	1.02	51	0.45	33	0.99	119	3.85	800	4.44	1065
	12′	4	1.36	68	0.60	44	1.49	179	5.77	1200	6.67	1600

Lighting Data

Model		Bulbs per Row	Bulb Length	Typical per Light Row 120 Volts Amps	Typical per Light Row 120 Volts Watts	Maximum Lighting 120 Volts Amps	Maximum Lighting 120 Volts Watts
OSI	4′	1	4′	0.23	28	0.70	84
	6′	2	3′	0.37	44	1.10	132
	8′	2	4′	0.47	56	1.40	168
	12′	3	4′	0.70	84	2.10	252

Guidelines & Control Settings

Model	BTUH/ft[1]	Evaporator (°F)	Superheat Set Point @ Bulb (°F)	Discharge Air (°F)	Return Air (°F)	Discharge Air Velocity[2] (FPM)
OSI[3]	350	22	6-8	31	38	175

[1] BTUHs/ft listed are for parallel operation. Conventional ratings may be approximated by multiplying listed rating by 1.04.

[2] Average discharge air velocity at peak of defrost.

[3] Humidification system required on this case when used for Fresh Meat application

Defrost Controls

Model	Defrosts Per Day	Run-Off Time (min)	Electric Defrost Fail-safe (min)	Electric Defrost Termination Temp. (°F)	Timed Off Defrost Fail-safe (min)	Timed Off Defrost Termination Temp. (°F)	Hot Gas Defrost Fail-safe (min)	Hot Gas Defrost Termination Temp. (°F)	Reverse Air Defrost Fail-safe (min)	Reverse Air Defrost Termination Temp. (°F)
OSI	3	6 - 8	30	47	60[4]	47[4]	26	45	- - -[5]	- - -

[4] Not recommended on this model due to long defrost time.

[5] NOTE: - - - not an option on this case model.

Medium Temperature Defrost Schedule

No. Per Day	Hours
1	12 midnight
2	12 am - 12 pm
3	6 am - 2 pm - 10 pm
4	12 - 6 am - 12 - 6 pm

All measurements are taken per ARI 1200 - 2002 specifications.

NSF COMPONENT

c UL us

Hill PHOENIX EXCELLENCE

A DOVER COMPANY

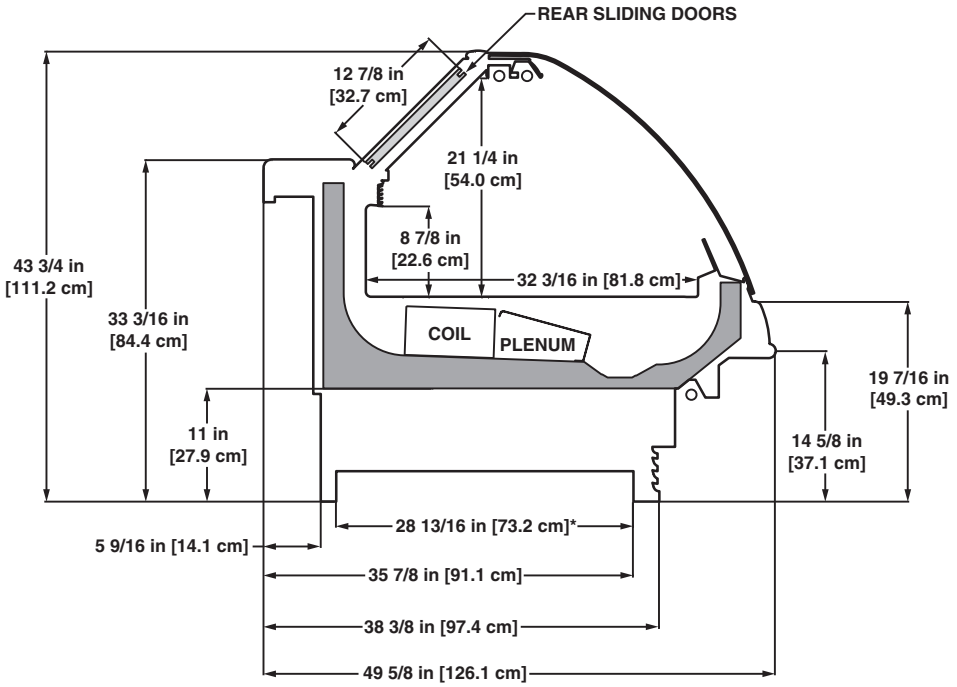

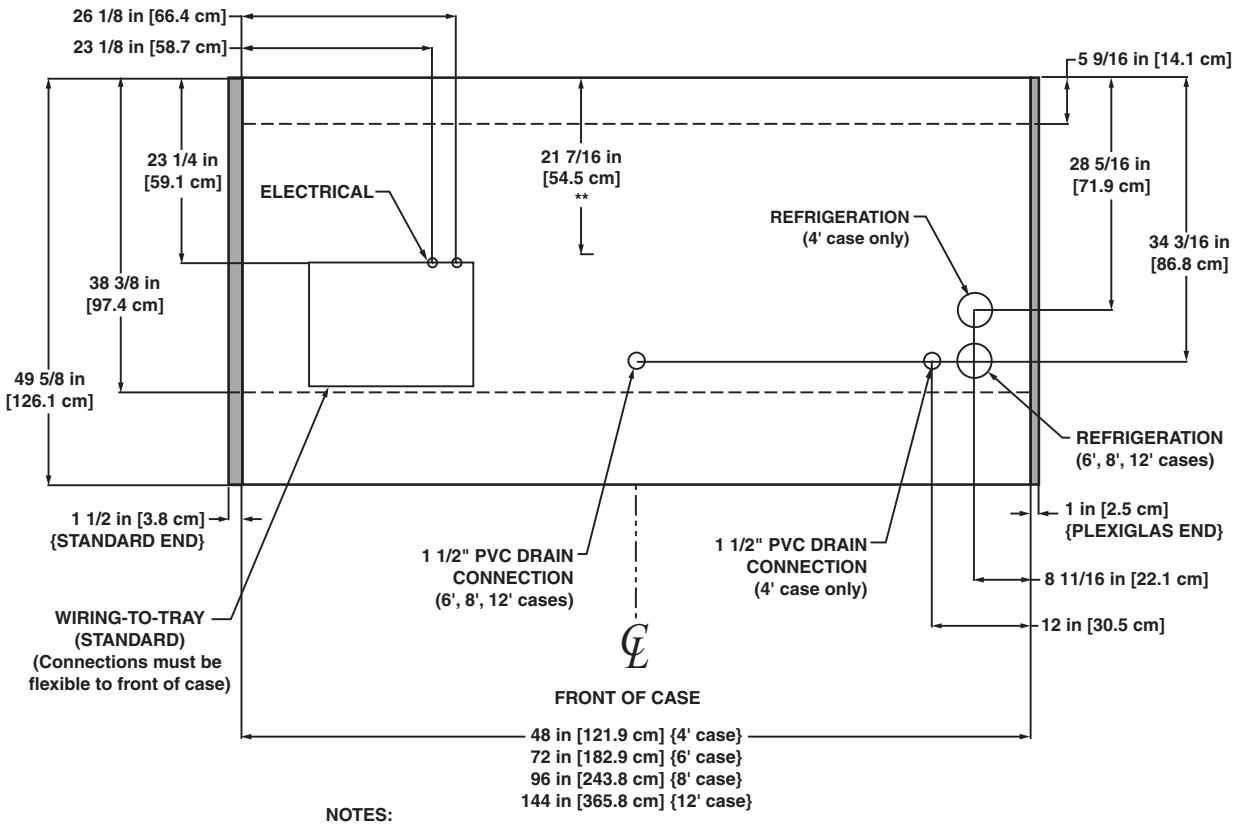

NOTES:

* STUB-UP AREA
** RECOMMENDED STUB-UP CENTERLINE FOR ELECTRICAL AND HUB DRAINS

- FRONT, REAR AND TOP SILL HEIGHTS VARY WITH BASEFRAME HEIGHT
- ENDS ADD APPROXIMATELY 1 INCH TO CASE HEIGHT
- SUCTION LINE - 7/8", LIQUID LINE - 1/2"

NSF COMPONENT c UL us

A DOVER COMPANY

Wide International Style Service Deli/Meat/Seafood Merchandiser

OWSI - 4′, 6′, 8′ & 12′

Electrical Data

Model		Fans per Case	Standard Fans 120 Volts Amps	Standard Fans 120 Volts Watts	High Efficiency Fans 120 Volts Amps	High Efficiency Fans 120 Volts Watts	Anti-Condensate Heaters 120 Volts Amps	Anti-Condensate Heaters 120 Volts Watts	Defrost Heaters 208 Volts Amps	Defrost Heaters 208 Volts Watts	Defrost Heaters 240 Volts Amps	Defrost Heaters 240 Volts Watts
OWSI	4′	2	0.68	34	0.30	22	0.55	66	1.92	400	2.22	532
	6′	2	0.68	34	0.30	22	1.03	124	2.88	600	3.33	798
	8′	3	1.02	51	0.45	33	0.99	119	3.85	800	4.44	1065
	12′	4	1.36	68	0.60	44	1.49	179	5.77	1200	6.67	1600

Lighting Data

Model		Bulbs per Row	Bulb Length	Typical per Light Row 120 Volts Amps	Typical per Light Row 120 Volts Watts	Maximum Lighting 120 Volts Amps	Maximum Lighting 120 Volts Watts
OWSI	4′	1	4′	0.23	28	0.70	84
	6′	2	3′	0.37	44	1.10	132
	8′	2	4′	0.47	56	1.40	168
	12′	3	4′	0.70	84	2.10	252

Guidelines & Control Settings

Model	BTUH/ft[1]	Evaporator (°F)	Superheat Set Point @ Bulb (°F)	Discharge Air (°F)	Return Air (°F)	Discharge Air Velocity[2] (FPM)
OWSI[3]	450	22	6-8	31	38	175

[1] BTUHs/ft listed are for parallel operation. Conventional ratings may be approximated by multiplying listed rating by 1.04.

[2] Average discharge air velocity at peak of defrost.

[3] Humidification system required on this case when used for Fresh Meat application

Defrost Controls

Model	Defrosts Per Day	Run-Off Time (min)	Electric Defrost Fail-safe (min)	Electric Defrost Termination Temp. (°F)	Timed Off Defrost Fail-safe (min)	Timed Off Defrost Termination Temp. (°F)	Hot Gas Defrost Fail-safe (min)	Hot Gas Defrost Termination Temp. (°F)	Reverse Air Defrost Fail-safe (min)	Reverse Air Defrost Termination Temp. (°F)
OWSI	3	6 - 8	30	47	60[4]	47[4]	26	45	- - -[5]	- - -

[4] Not recommended on this model due to long defrost time.

[5] NOTE: - - - not an option on this case model.

Medium Temperature Defrost Schedule

No. Per Day	Hours
1	12 midnight
2	12 am - 12 pm
3	6 am - 2 pm - 10 pm
4	12 - 6 am - 12 - 6 pm

All measurements are taken per ARI 1200 - 2002 specifications.

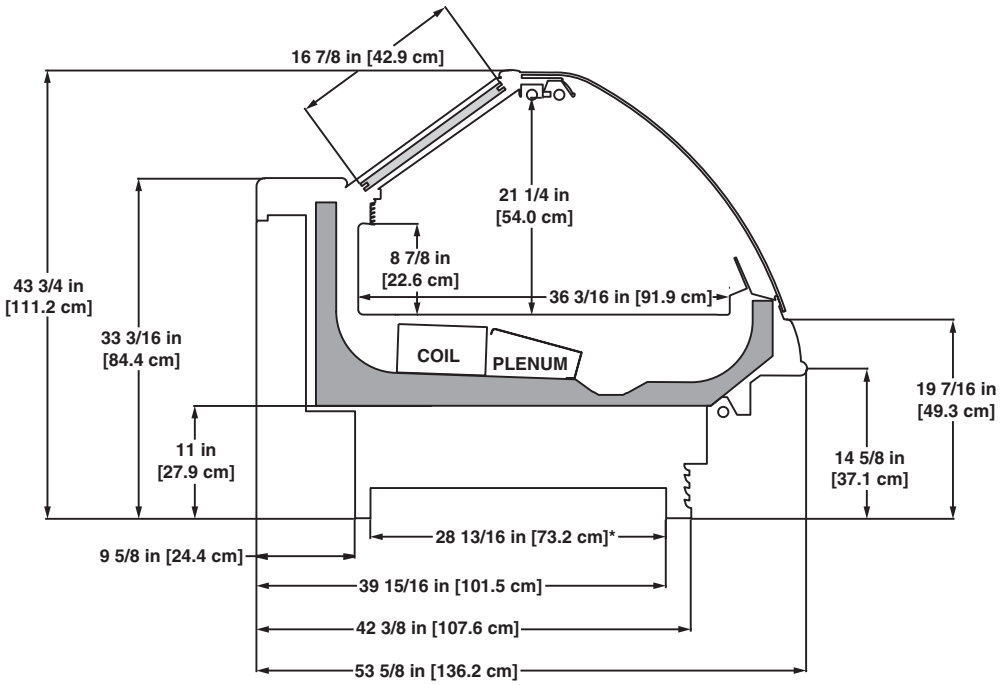

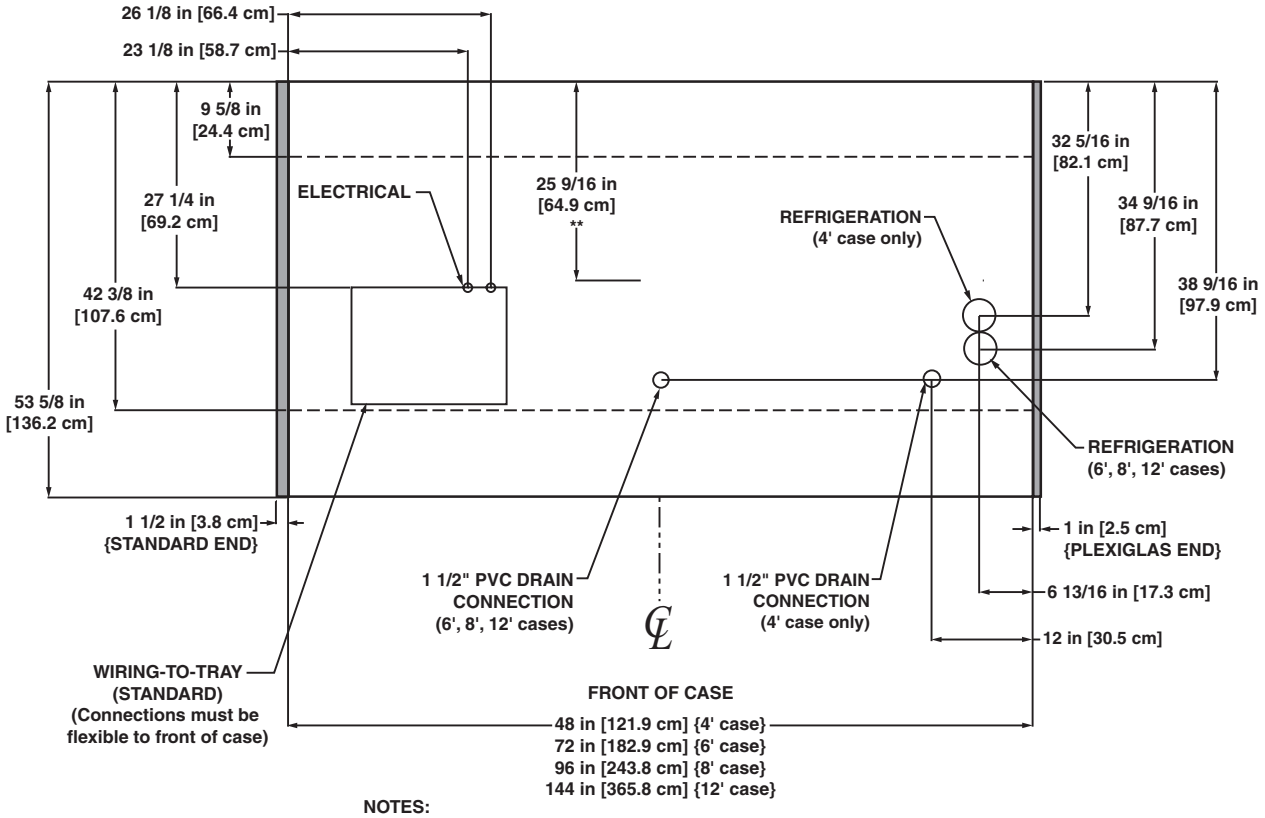

NOTES:

* STUB-UP AREA
** RECOMMENDED STUB-UP CENTERLINE FOR ELECTRICAL AND HUB DRAINS

- FRONT, REAR AND TOP SILL HEIGHTS VARY WITH BASEFRAME HEIGHT
- ENDS ADD APPROXIMATELY 1 INCH TO CASE HEIGHT
- SUCTION LINE - 7/8", LIQUID LINE - 1/2"

NSF COMPONENT c UL us

A DOVER COMPANY

International Style Service Deli/Meat/Seafood Merchandiser

O2SI - 4′, 6′, 8′ & 12′

Electrical Data

Model		Fans per Case	Standard Fans 120 Volts Amps	Standard Fans 120 Volts Watts	High Efficiency Fans 120 Volts Amps	High Efficiency Fans 120 Volts Watts	Anti-Condensate Heaters 120 Volts Amps	Anti-Condensate Heaters 120 Volts Watts	Defrost Heaters 208 Volts Amps	Defrost Heaters 208 Volts Watts	Defrost Heaters 240 Volts Amps	Defrost Heaters 240 Volts Watts
O2SI	4′	2	0.68	34	0.30	22	0.55	66	1.92	400	2.22	532
	6′	2	0.68	34	0.30	22	1.03	124	2.88	600	3.33	798
	8′	3	1.02	51	0.45	33	0.99	119	3.85	800	4.44	1065
	12′	4	1.36	68	0.60	44	1.49	179	5.77	1200	6.67	1600

Lighting Data

Model		Bulbs per Row	Bulb Length	Typical per Light Row 120 Volts Amps	Typical per Light Row 120 Volts Watts	Maximum Lighting 120 Volts Amps	Maximum Lighting 120 Volts Watts
O2SI	4′	1	4′	0.23	28	0.70	84
	6′	2	3′	0.37	44	1.10	132
	8′	2	4′	0.47	56	1.40	168
	12′	3	4′	0.70	84	2.10	252

Guidelines & Control Settings

Model	BTUH/ft[1]	Evaporator (°F)	Superheat Set Point @ Bulb (°F)	Discharge Air (°F)	Return Air (°F)	Discharge Air Velocity[2] (FPM)
O2SI[3]	508	17	6-8	24	35	540

[1] BTUHs/ft listed are for parallel operation. Conventional ratings may be approximated by multiplying listed rating by 1.04.

[2] Average discharge air velocity at peak of defrost.

[3] Humidification system required on this case when used for Fresh Meat application

Defrost Controls

Model	Defrosts Per Day	Run-Off Time (min)	Electric Defrost Fail-safe (min)	Electric Defrost Termination Temp. (°F)	Timed Off Defrost Fail-safe (min)	Timed Off Defrost Termination Temp. (°F)	Hot Gas Defrost Fail-safe (min)	Hot Gas Defrost Termination Temp. (°F)	Reverse Air Defrost Fail-safe (min)	Reverse Air Defrost Termination Temp. (°F)
O2SI	3	6 - 8	30	47	60[4]	47[4]	26	45	- - -[5]	- - -

[4] Not recommended on this model due to long defrost time.

[5] NOTE: - - - not an option on this case model.

Medium Temperature Defrost Schedule

No. Per Day	Hours
1	12 midnight
2	12 am - 12 pm
3	6 am - 2 pm - 10 pm
4	12 - 6 am - 12 - 6 pm

All measurements are taken per ARI 1200 - 2002 specifications.

Hill PHOENIX EXCELLENCE
A DOVER COMPANY
NSF COMPONENT
c UL us

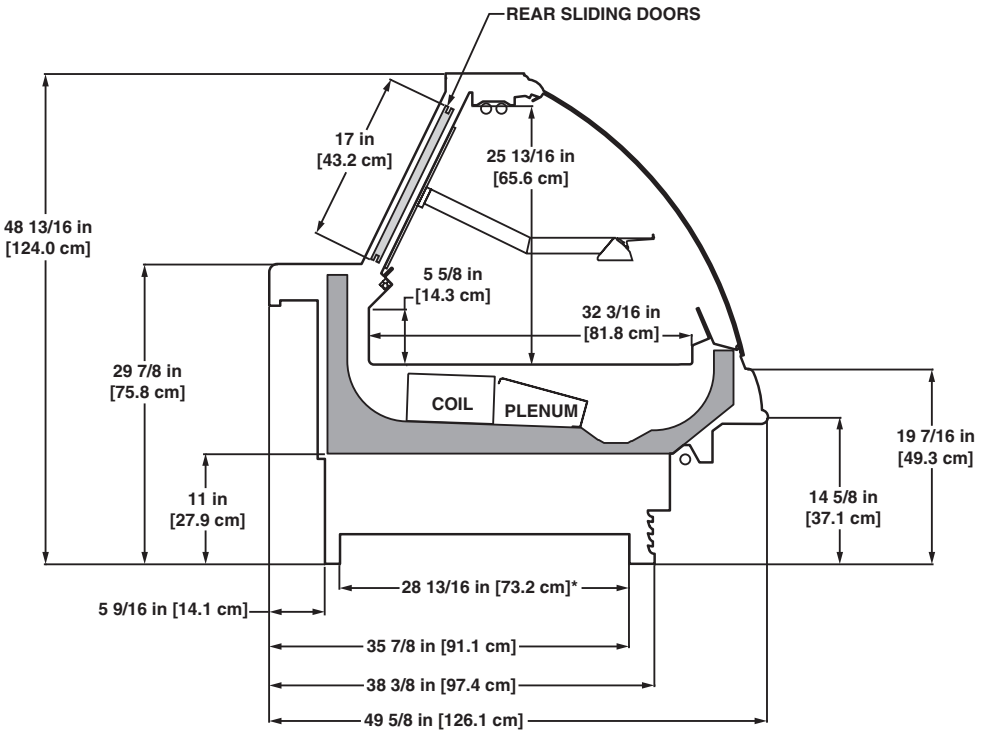

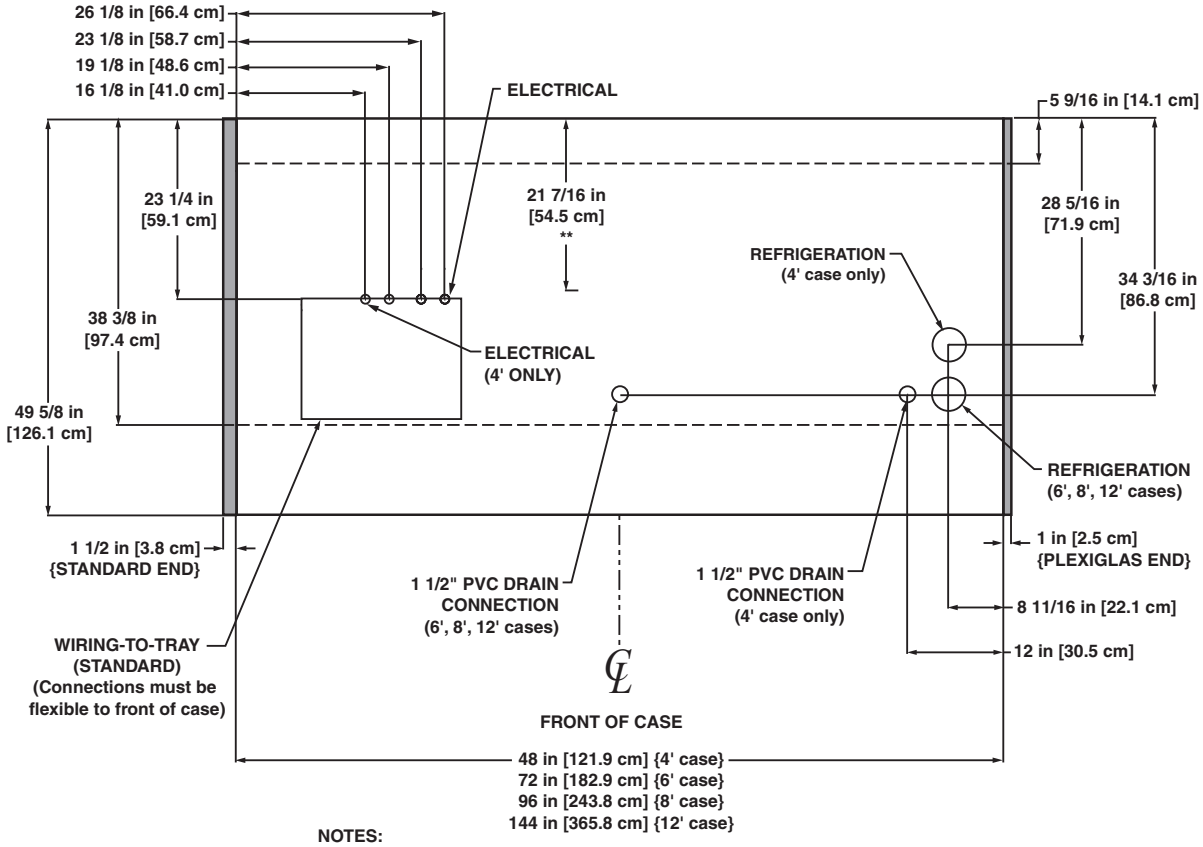

NOTES:

* STUB-UP AREA
** RECOMMENDED STUB-UP CENTERLINE FOR ELECTRICAL AND HUB DRAINS

- FRONT, REAR AND TOP SILL HEIGHTS VARY WITH BASEFRAME HEIGHT
- ENDS ADD APPROXIMATELY 1 INCH TO CASE HEIGHT
- SUCTION LINE - 7/8", LIQUID LINE - 1/2"

NSF COMPONENT c UL us

A DOVER COMPANY

International Style Flat Glass Service Deli/Meat/Seafood Merchandiser

OSIF - 4′, 6′, 8′, & 12′

Electrical Data

Model		Fans per Case	Standard Fans 120 Volts Amps	Standard Fans 120 Volts Watts	High Efficiency Fans 120 Volts Amps	High Efficiency Fans 120 Volts Watts	Anti-Condensate Heaters 120 Volts Amps	Anti-Condensate Heaters 120 Volts Watts	Defrost Heaters 208 Volts Amps	Defrost Heaters 208 Volts Watts	Defrost Heaters 240 Volts Amps	Defrost Heaters 240 Volts Watts
OSIF	4′	2	0.68	34	0.30	22	0.55	66	1.92	400	2.22	532
	6′	2	0.68	34	0.30	22	1.03	124	2.88	600	3.33	798
	8′	3	1.02	51	0.45	33	0.99	119	3.85	800	4.44	1065
	12′	4	1.36	68	0.60	44	1.49	179	5.77	1200	6.67	1600

Lighting Data

Model		Bulbs per Row	Bulb Length	Typical per Light Row 120 Volts Amps	Typical per Light Row 120 Volts Watts	Maximum Lighting 120 Volts Amps	Maximum Lighting 120 Volts Watts
OSIF	4′	1	4′	0.23	28	0.70	84
	6′	2	3′	0.37	44	1.10	132
	8′	2	4′	0.47	56	1.40	168
	12′	3	4′	0.70	84	2.10	252

Guidelines & Control Settings

Model	BTUH/ft[1]	Evaporator (°F)	Superheat Set Point @ Bulb (°F)	Discharge Air (°F)	Return Air (°F)	Discharge Air Velocity[2] (FPM)
OSIF[3]	350	22	6-8	31	38	175

[1] BTUHs/ft listed are for parallel operation. Conventional ratings may be approximated by multiplying listed rating by 1.04.

[2] Average discharge air velocity at peak of defrost.

[3] Humidification system required on this case when used for Fresh Meat application

Defrost Controls

Model	Defrosts Per Day	Run-Off Time (min)	Electric Defrost Fail-safe (min)	Electric Defrost Termination Temp. (°F)	Timed Off Defrost Fail-safe (min)	Timed Off Defrost Termination Temp. (°F)	Hot Gas Defrost Fail-safe (min)	Hot Gas Defrost Termination Temp. (°F)	Reverse Air Defrost Fail-safe (min)	Reverse Air Defrost Termination Temp. (°F)
OSIF	3	6 - 8	30	47	60[4]	47[4]	26	45	- - -[5]	- - -

[4] Not recommended on this model due to long defrost time.

[5] NOTE: - - - not an option on this case model.

Medium Temperature Defrost Schedule

No. Per Day	Hours
1	12 midnight
2	12 am - 12 pm
3	6 am - 2 pm - 10 pm
4	12 - 6 am - 12 - 6 pm

All measurements are taken per ARI 1200 - 2002 specifications.

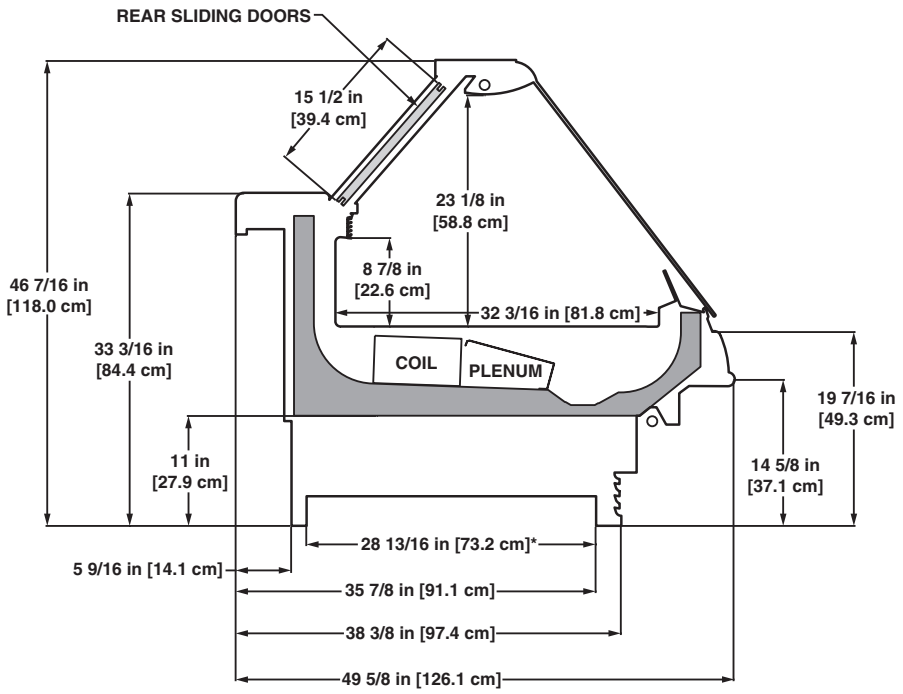

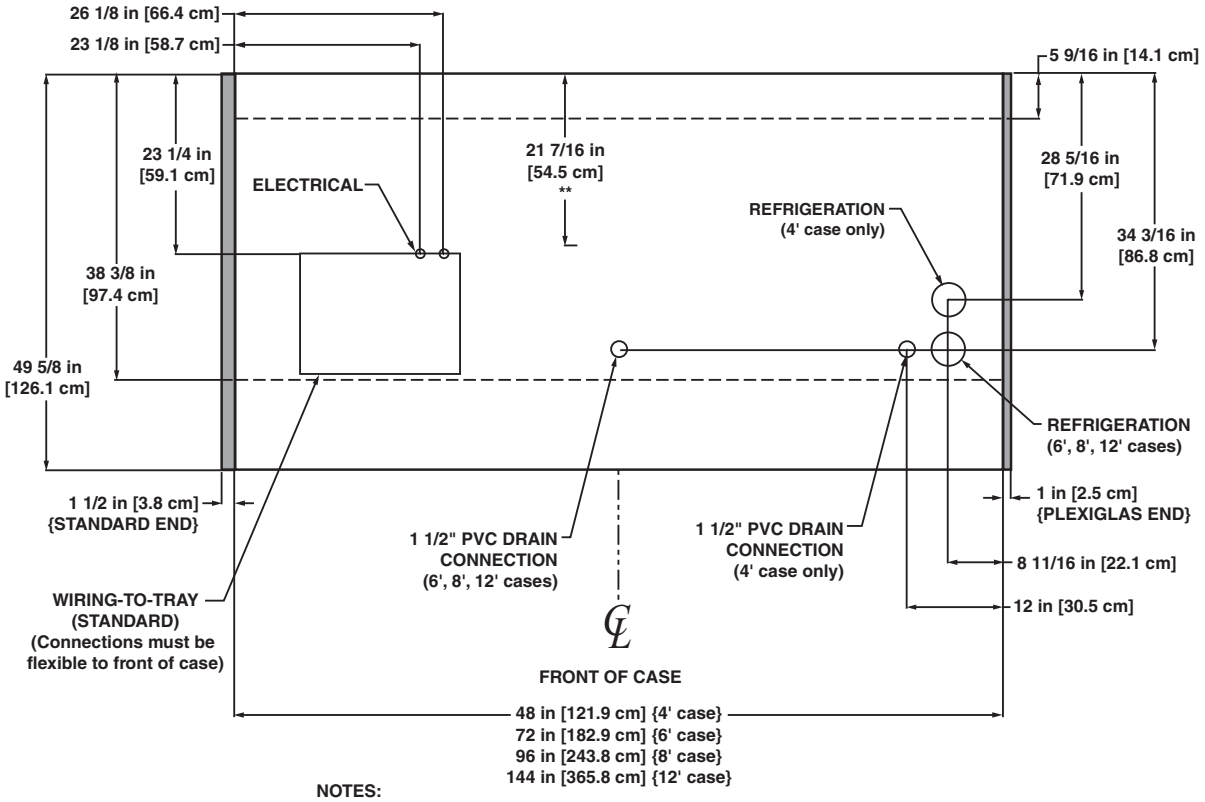

NOTES:

* STUB-UP AREA
** RECOMMENDED STUB-UP CENTERLINE FOR ELECTRICAL AND HUB DRAINS

- FRONT, REAR AND TOP SILL HEIGHTS VARY WITH BASEFRAME HEIGHT
- ENDS ADD APPROXIMATELY 1 INCH TO CASE HEIGHT
- SUCTION LINE - 7/8", LIQUID LINE - 1/2"

NSF COMPONENT c UL us

A DOVER COMPANY

International Style Flat Glass Service Deli/Meat/Seafood Merchandiser

O2SIF - 8′ & 12′

Electrical Data

Model		Fans per Case	Standard Fans 120 Volts Amps	Standard Fans 120 Volts Watts	High Efficiency Fans 120 Volts Amps	High Efficiency Fans 120 Volts Watts	Anti-Condensate Heaters 120 Volts Amps	Anti-Condensate Heaters 120 Volts Watts	Defrost Heaters 208 Volts Amps	Defrost Heaters 208 Volts Watts	Defrost Heaters 240 Volts Amps	Defrost Heaters 240 Volts Watts
O2SIF	8′	3	1.02	51	0.45	33	0.99	119	3.85	800	4.44	1065
	12′	4	1.36	68	0.60	44	1.49	179	5.77	1200	6.67	1600

Lighting Data

Model		Bulbs per Row	Bulb Length	Typical per Light Row 120 Volts Amps	Typical per Light Row 120 Volts Watts	Maximum Lighting 120 Volts Amps	Maximum Lighting 120 Volts Watts
O2SIF	8′	2	4′	0.47	56	1.40	168
	12′	3	4′	0.70	84	2.10	252

Guidelines & Control Settings

Model	BTUH/ft[1]	Evaporator (°F)	Superheat Set Point @ Bulb (°F)	Discharge Air (°F)	Return Air (°F)	Discharge Air Velocity[2] (FPM)
O2SIF[3]	508	17	6-8	24	35	540

[1] BTUHs/ft listed are for parallel operation. Conventional ratings may be approximated by multiplying listed rating by 1.04.

[2] Average discharge air velocity at peak of defrost.

[3] Humidification system required on this case when used for Fresh Meat application

Defrost Controls

Model	Defrosts Per Day	Run-Off Time (min)	Electric Defrost Fail-safe (min)	Electric Defrost Termination Temp. (°F)	Timed Off Defrost Fail-safe (min)	Timed Off Defrost Termination Temp. (°F)	Hot Gas Defrost Fail-safe (min)	Hot Gas Defrost Termination Temp. (°F)	Reverse Air Defrost Fail-safe (min)	Reverse Air Defrost Termination Temp. (°F)
O2SIF	3	6 - 8	30	47	60[4]	47[4]	26	45	- - -[5]	- - -

[4] Not recommended on this model due to long defrost time.

[5] NOTE: - - - not an option on this case model.

Medium Temperature Defrost Schedule

No. Per Day	Hours
1	12 midnight
2	12 am - 12 pm
3	6 am - 2 pm - 10 pm
4	12 - 6 am - 12 - 6 pm

All measurements are taken per ARI 1200 - 2002 specifications.

6/07

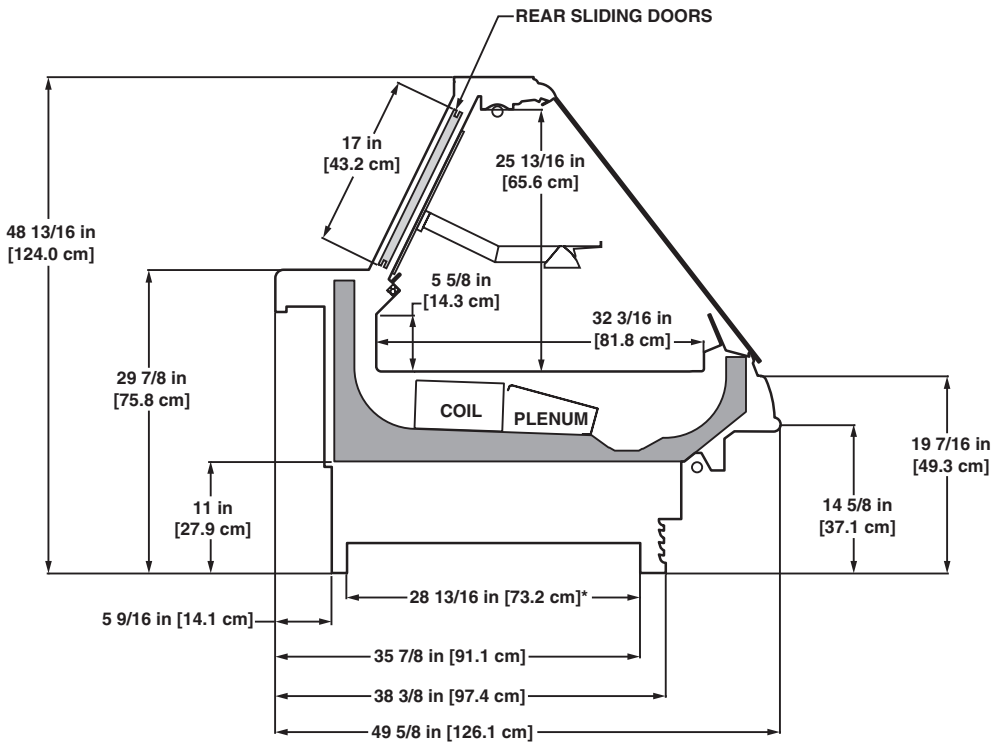

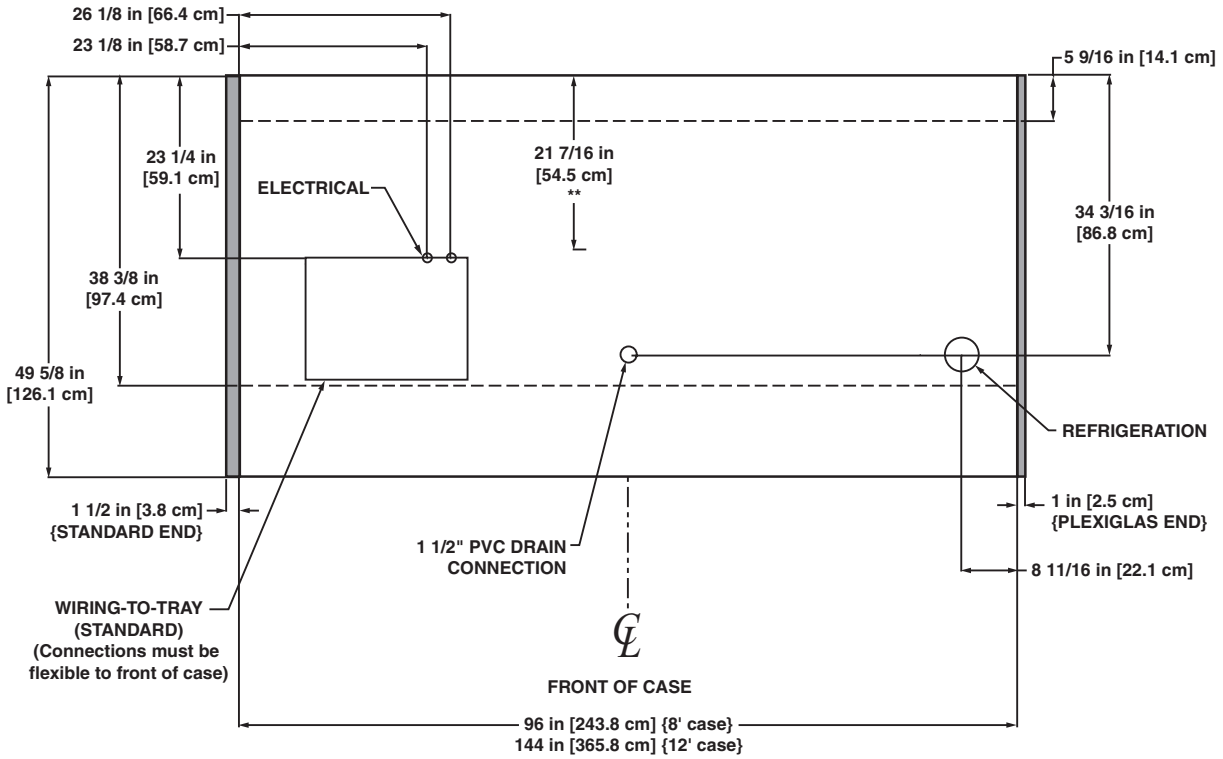

NOTES:

* STUB-UP AREA
** RECOMMENDED STUB-UP CENTERLINE FOR ELECTRICAL AND HUB DRAINS

- FRONT, REAR AND TOP SILL HEIGHTS VARY WITH BASEFRAME HEIGHT
- ENDS ADD APPROXIMATELY 1 INCH TO CASE HEIGHT
- SUCTION LINE - 7/8", LIQUID LINE - 1/2"

Flat Glass Service Deli Merchandiser

OLF - 4′, 6′, 8′ & 12′

Electrical Data

Model		Fans per Case		Ambient Fans[1]		Standard Fans		High Efficiency Fans		Anti-Condensate Heaters		Defrost Heaters			
				120 Volts		120 Volts		120 Volts		120 Volts		208 Volts		220 Volts	
		Pri.	Amb.	Amps	Watts	Amps	Watts	Amps	Watts	Amps	Watts	Amps	Watts	Amps	Watts
OLF	4′	2	2	0.30	11	0.68	34	0.30	22	3.33	400	1.92	400	2.22	532
	6′	2	3	0.45	17	0.68	34	0.30	22	5.00	600	2.88	600	3.33	798
	8′	3	4	0.60	22	1.02	51	0.45	33	6.66	800	3.85	800	4.44	1065
	12′	4	6	0.90	33	1.36	68	0.60	44	10.00	1200	5.77	1200	6.67	1600

[1] Ambient fans are standard equipment for this case model. The primary fans can either be standard or high efficiency.

Lighting Data

Model		Bulbs per Row	Bulb Length	Typical per Light Row		Maximum Lighting	
				120 Volts		120 Volts	
				Amps	Watts	Amps	Watts
OLF	4′	1	4′	0.23	28	1.40	168
	6′	2	3′	0.37	44	2.20	264
	8′	2	4′	0.47	56	2.80	336
	12′	3	4′	0.70	84	4.20	504

Guidelines & Control Settings

Model	BTUH/ft[2]	Evaporator (°F)	Superheat Set Point @ Bulb (°F)	Discharge Air (°F)	Return Air (°F)	Discharge Air Velocity[3] (FPM)
OLF	431	17	6-8	27	34	235

[2] BTUHs/ft listed are for parallel operation. Conventional ratings may be approximated by multiplying listed rating by 1.04.

[3] Average discharge air velocity at peak of defrost.

Defrost Controls

Model	Defrosts Per Day	Run-Off Time (min)	Electric Defrost		Timed Off Defrost		Hot Gas Defrost		Reverse Air Defrost	
			Fail-safe (min)	Termination Temp. (°F)	Fail-safe (min)	Termination Temp. (°F)	Fail-safe (min)	Termination Temp. (°F)	Fail-safe (min)	Termination Temp. (°F)
OLF	2	6 - 8	35	47	50[4]	47[4]	20	45	- - -[5]	- - -

[4] Not recommended on this model due to long defrost time.

[5] NOTE: - - - not an option on this case model.

Medium Temperature Defrost Schedule

No. Per Day	Hours
1	12 midnight
2	12 am - 12 pm
3	6 am - 2 pm - 10 pm
4	12 - 6 am - 12 - 6 pm

All measurements are taken per ARI 1200 - 2002 specifications.

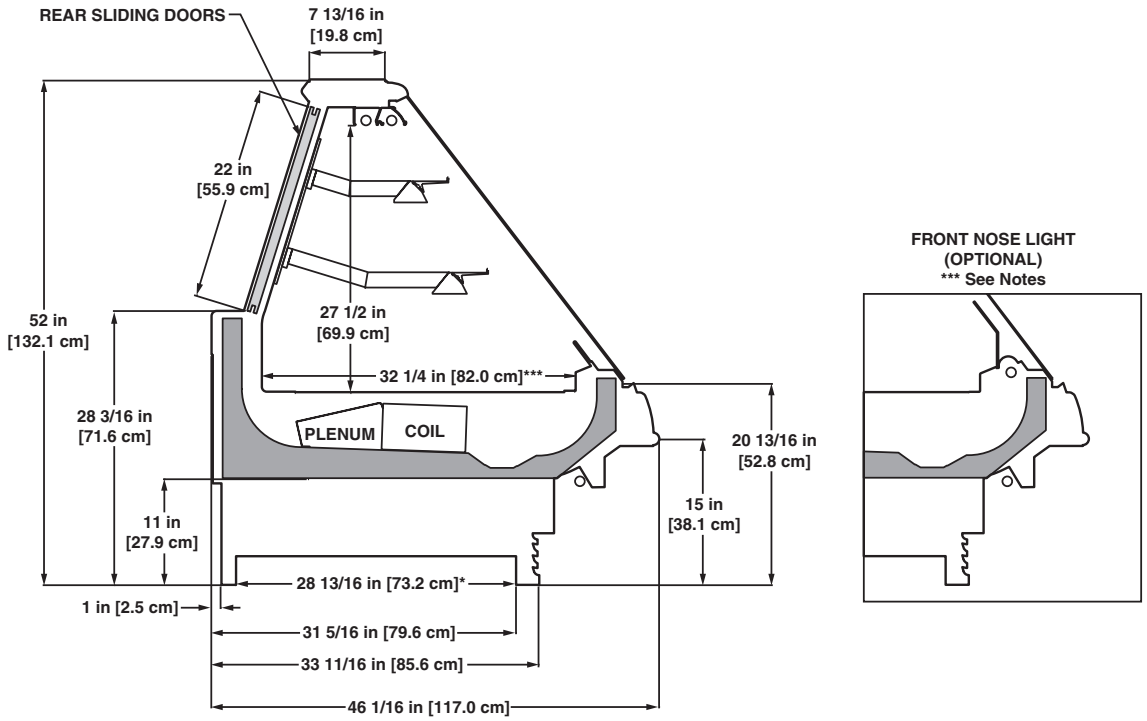

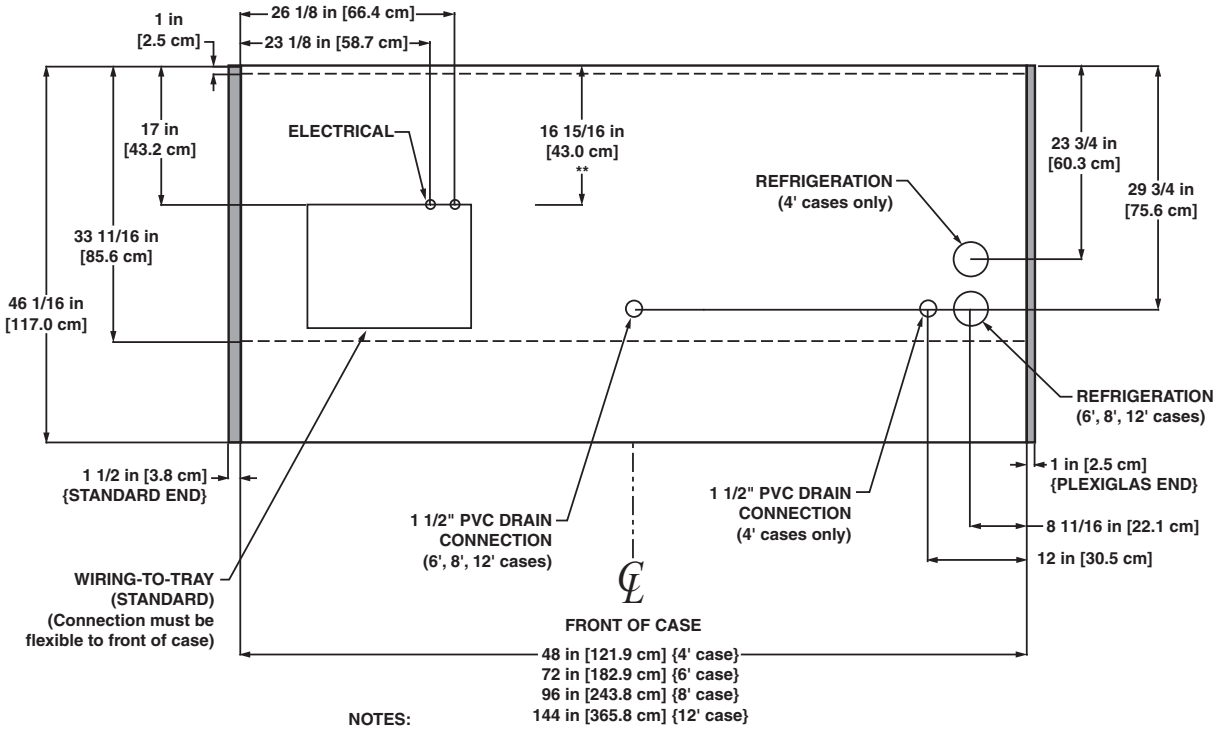

NOTES:

* STUB-UP AREA
** RECOMMENDED STUB-UP CENTERLINE FOR ELECTRICAL AND HUB DRAINS
*** WHEN CASE IS EQUIPPED WITH A NOSE LIGHT THE INTERIOR WIDTH IS 29 11/16"

- FRONT, REAR AND TOP SILL HEIGHTS VARY WITH BASEFRAME HEIGHT
- ENDS ADD APPROXIMATELY 1 INCH TO CASE HEIGHT
- SUCTION LINE - 7/8", LIQUID LINE - 1/2"
- AVAILABLE SHELF SIZES: 10" & 12"

Flat Glass Service Deli Gravity Coil Merchandiser

OLFG - 4′, 6′, 8′ & 12′

Electrical Data

Model		Fans per Case		Ambient Fans[1]		Standard Fans		High Efficiency Fans		Anti-Condensate Heaters		Defrost Heaters			
				120 Volts		120 Volts		120 Volts		120 Volts		208 Volts		220 Volts	
		Pri.	Amb.	Amps	Watts	Amps	Watts	Amps	Watts	Amps	Watts	Amps	Watts	Amps	Watts
OLFG	4′	2	2	0.30	11	0.68	34	0.30	22	3.33	400	1.92	400	2.22	532
	6′	2	3	0.45	17	0.68	34	0.30	22	5.00	600	2.88	600	3.33	798
	8′	3	4	0.60	22	1.02	51	0.45	33	6.66	800	3.85	800	4.44	1065
	12′	4	6	0.90	33	1.36	68	0.60	44	10.00	1200	5.77	1200	6.67	1600

[1] Ambient fans are standard equipment for this case model. The primary fans can either be standard or high efficiency.

Lighting Data

Model		Bulbs per Row	Bulb Length	Typical per Light Row		Maximum Lighting	
				120 Volts		120 Volts	
				Amps	Watts	Amps	Watts
OLFG	4′	1	4′	0.23	28	1.40	168
	6′	2	3′	0.37	44	2.20	264
	8′	2	4′	0.47	56	2.80	336
	12′	3	4′	0.70	84	4.20	504

Guidelines & Control Settings

Model	BTUH/ft[2]	Evaporator (°F)	Superheat Set Point @ Bulb (°F)	Discharge Air (°F)	Return Air (°F)	Discharge Air Velocity[3] (FPM)
OLFG[4]	275	15	6-8	31	38	125

[2] BTUHs/ft listed are for parallel operation. Conventional ratings may be approximated by multiplying listed rating by 1.04.

[3] Average discharge air velocity at peak of defrost.

[4] If the OLFG is piped to a suction header lower than 10°F an EPR with a suction stop solenoid is required. If a suction stop solenoid is not provided at the rack a suction stop solenoid is required at the case. A liquid line solenoid alone will not allow the case to cycle properly and is not recommended for control of this case. The thermostat probe should be located on the inlet of the top coil. The cut out point should be set to 15°F and the cut in point should be set so that refrigeration starts as soon as the top coil ice starts to drip.

Defrost Controls

Model	Defrosts Per Day	Run-Off Time (min)	Electric Defrost		Timed Off Defrost		Hot Gas Defrost		Reverse Air Defrost	
			Fail-safe (min)	Termination Temp. (°F)	Fail-safe (min)	Termination Temp. (°F)	Fail-safe (min)	Termination Temp. (°F)	Fail-safe (min)	Termination Temp. (°F)
OLFG	2	6 - 8	35	47	65	47	20	45	- - -[5]	- - -

[5] NOTE: - - - not an option on this case model.

Medium Temperature Defrost Schedule

No. Per Day	Hours
1	12 midnight
2	12 am - 12 pm
3	6 am - 2 pm - 10 pm
4	12 - 6 am - 12 - 6 pm

All measurements are taken per ARI 1200 - 2002 specifications.

NSF COMPONENT

c UL us

Hill PHOENIX EXCELLENCE

A DOVER COMPANY

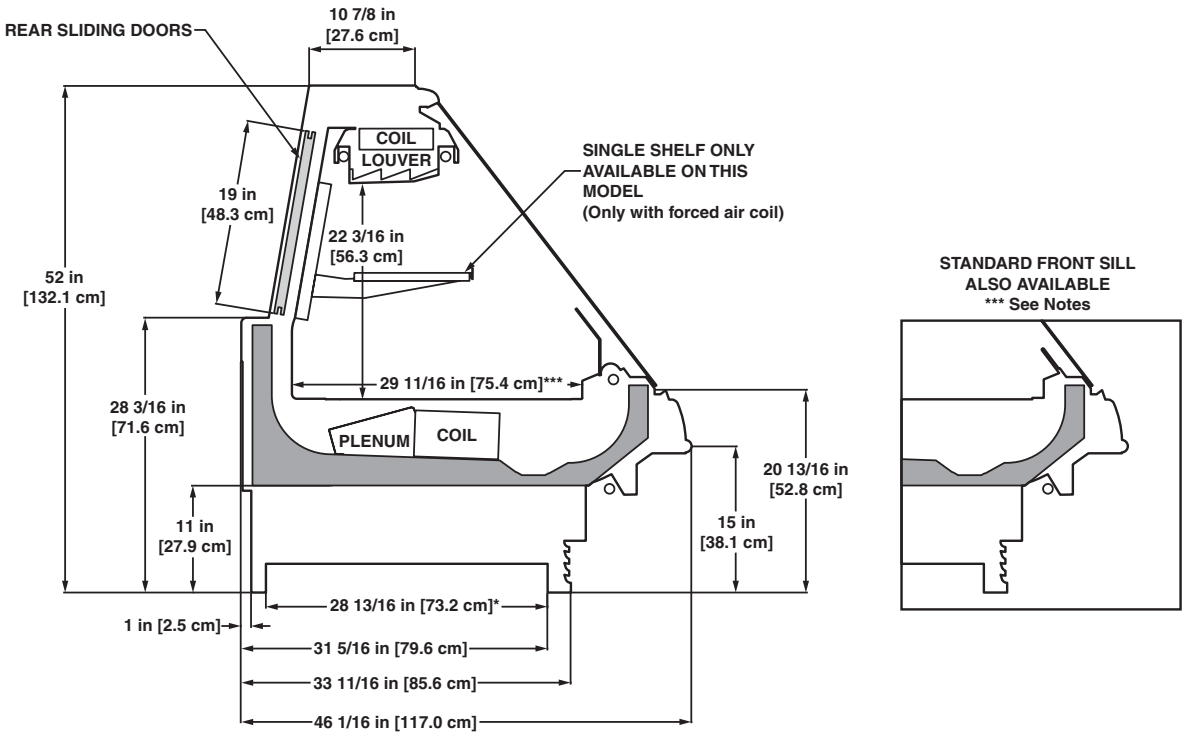

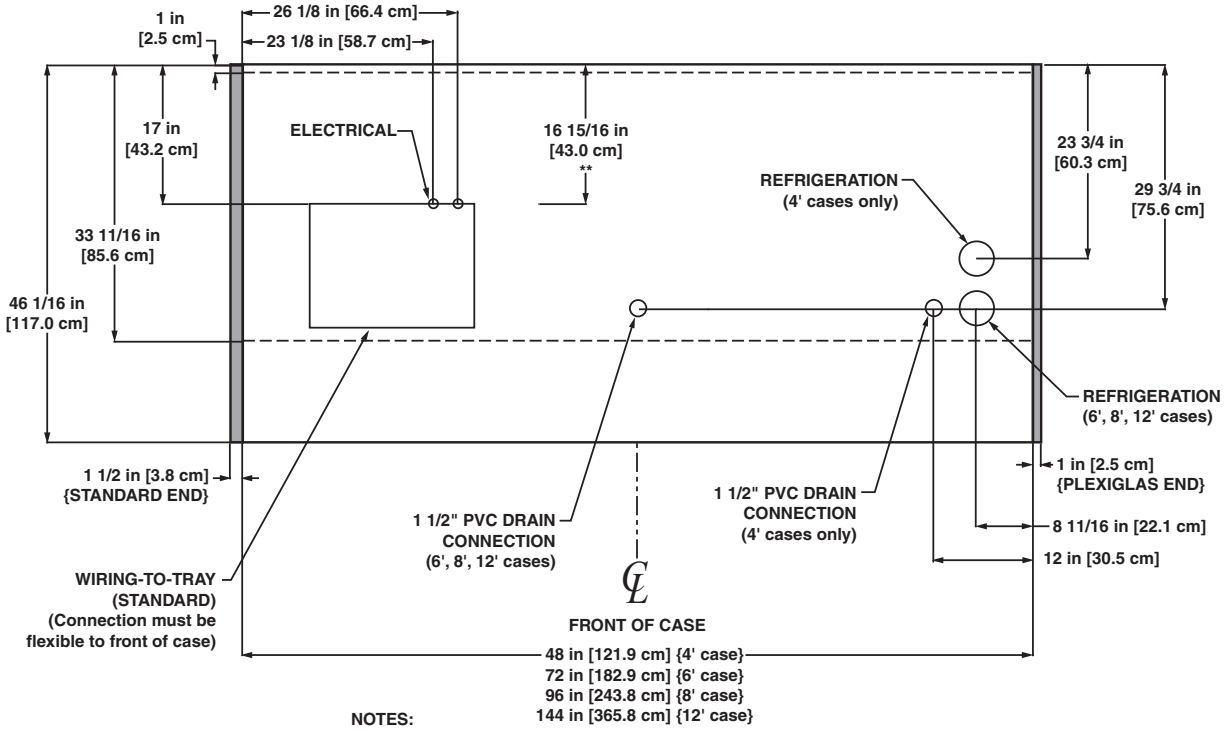

NOTES:

* STUB-UP AREA
** RECOMMENDED STUB-UP CENTERLINE FOR ELECTRICAL AND HUB DRAINS
*** WHEN CASE IS EQUIPPED WITH A NOSE LIGHT THE INTERIOR WIDTH IS 29 11/16"

- FRONT, REAR AND TOP SILL HEIGHTS VARY WITH BASEFRAME HEIGHT
- ENDS ADD APPROXIMATELY 1 INCH TO CASE HEIGHT
- SUCTION LINE - 7/8", LIQUID LINE - 1/2"
- AVAILABLE SHELF SIZES: 10" & 12" (SINGLE ROW OF SHELVES PER CASE)

NSF COMPONENT

A DOVER COMPANY

Full Service Flat Glass Deli Merchandiser

PDIF - 8′ & 12′

Electrical Data

Model		Fans per Case	Standard Fans 120 Volts Amps	Standard Fans 120 Volts Watts	High Efficiency Fans 120 Volts Amps	High Efficiency Fans 120 Volts Watts	Anti-Condensate Heaters 120 Volts Amps	Anti-Condensate Heaters 120 Volts Watts	Defrost Heaters 208 Volts Amps	Defrost Heaters 208 Volts Watts	Defrost Heaters 240 Volts Amps	Defrost Heaters 240 Volts Watts
PDIF	8′	3	1.02	51	0.45	33	2.10	252	3.85	800	4.44	1065
	12′	4	1.36	68	0.60	44	3.20	384	5.77	1200	6.67	1600

Lighting Data

Model		Bulbs per Row	Bulb Length	Typical per Light Row 120 Volts Amps	Typical per Light Row 120 Volts Watts	Maximum Lighting 120 Volts Amps	Maximum Lighting 120 Volts Watts
PDIF	8′	2	4′	0.47	56	0.47	56
	12′	3	4′	0.70	84	0.70	84

Guidelines & Control Settings

Model	BTUH/ft[1]	Evaporator (°F)	Superheat Set Point @ Bulb (°F)	Discharge Air (°F)	Return Air (°F)	Discharge Air Velocity[2] (FPM)
PDIF	400	17	6-8	28	39	100

[1] BTUHs/ft listed are for parallel operation. Conventional ratings may be approximated by multiplying listed rating by 1.04.

[2] Average discharge air velocity at peak of defrost.

Defrost Controls

Model	Defrosts Per Day	Run-Off Time (min)	Electric Defrost Fail-safe (min)	Electric Defrost Termination Temp. (°F)	Timed Off Defrost Fail-safe (min)	Timed Off Defrost Termination Temp. (°F)	Hot Gas Defrost Fail-safe (min)	Hot Gas Defrost Termination Temp. (°F)	Reverse Air Defrost Fail-safe (min)	Reverse Air Defrost Termination Temp. (°F)
PDIF	4	6 - 8	30	47	40	47	26	45	- - -[3]	- - -

[3] NOTE: - - - not an option on this case model.

Medium Temperature Defrost Schedule

No. Per Day	Hours
1	12 midnight
2	12 am - 12 pm
3	6 am - 2 pm - 10 pm
4	12 - 6 am - 12 - 6 pm

All measurements are taken per ARI 1200 - 2002 specifications.

48″ HIGH

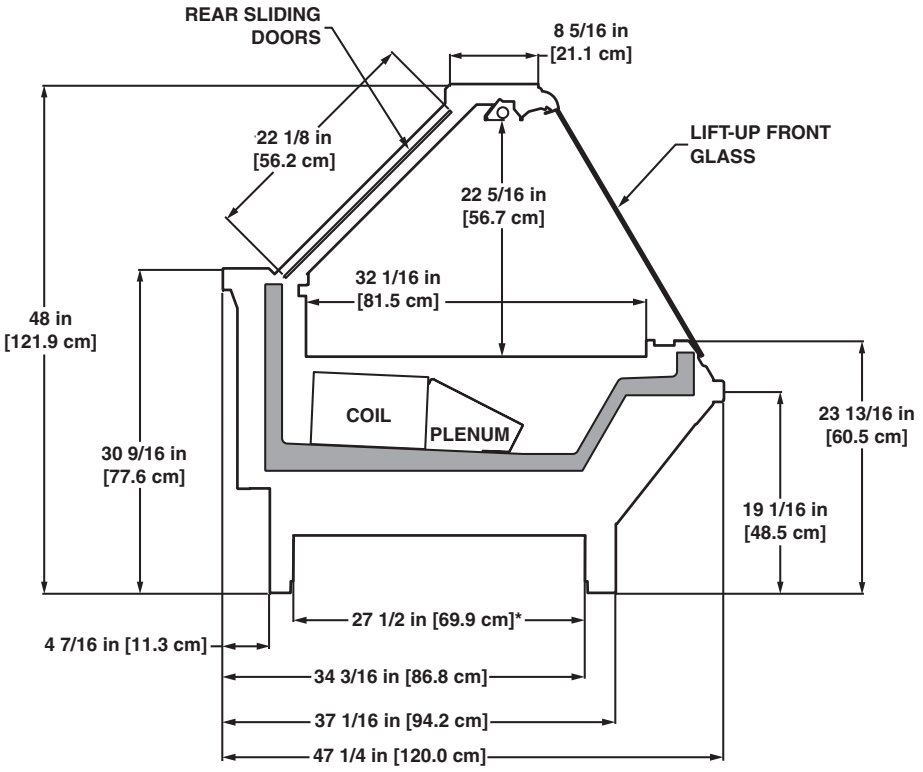

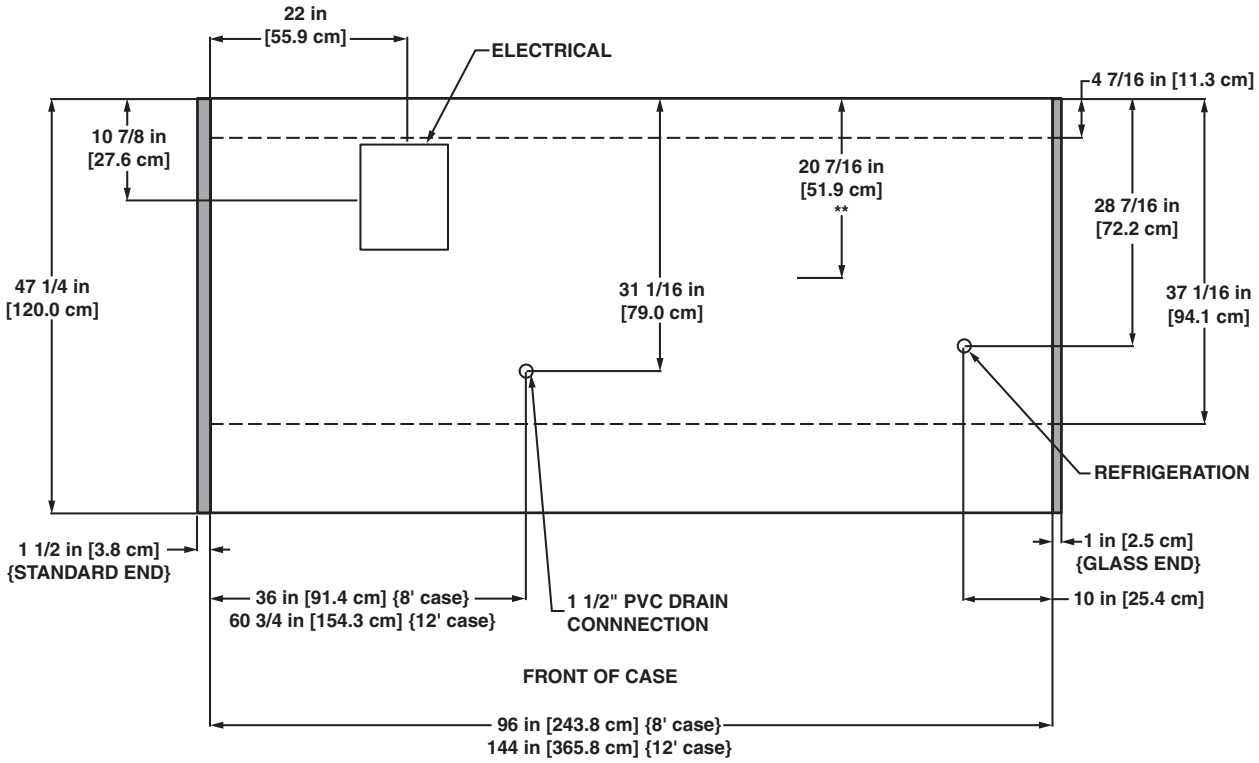

NOTES:

* STUB-UP AREA
** RECOMMENDED STUB-UP CENTERLINE FOR ELECTRICAL AND HUB DRAINS

- ENDS ADD APPROXIMATELY 1 INCH TO CASE HEIGHT
- DX: SUCTION LINE - 7/8", LIQUID LINE - 1/2"
- SC: SUPPLY LINE - 7/8", RETURN LINE - 7/8"

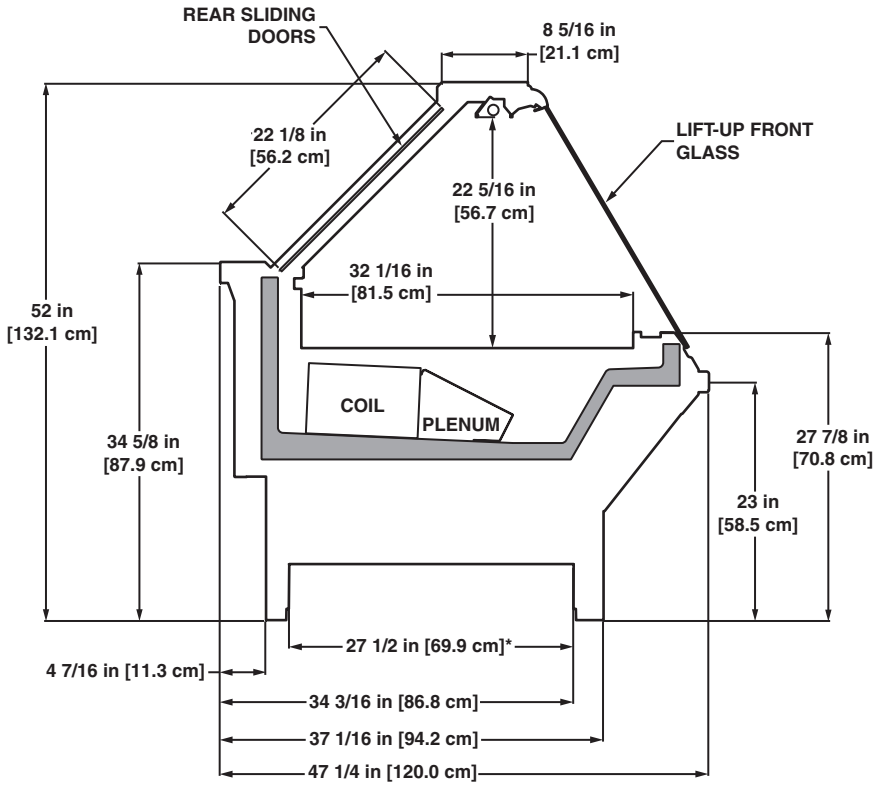

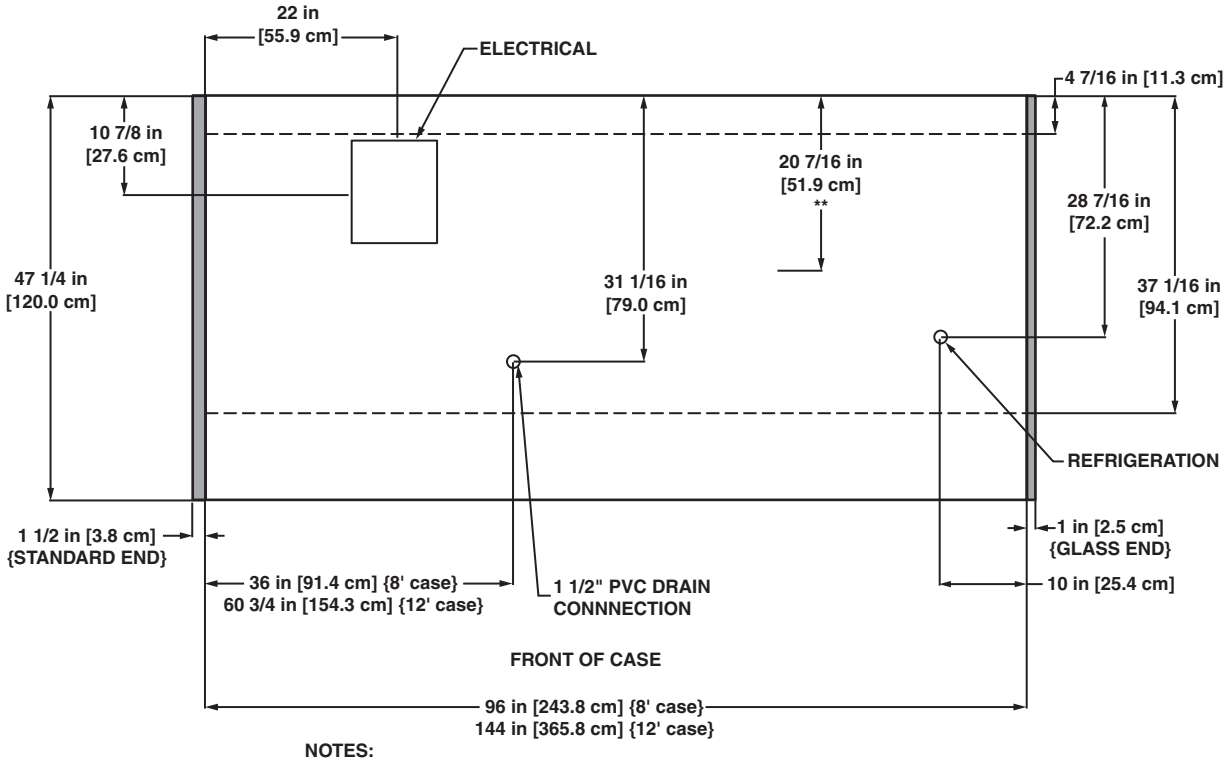

NOTES:

* STUB-UP AREA
** RECOMMENDED STUB-UP CENTERLINE FOR ELECTRICAL AND HUB DRAINS

- ENDS ADD APPROXIMATELY 1 INCH TO CASE HEIGHT
- DX: SUCTION LINE - 7/8", LIQUID LINE - 1/2"
- SC: SUPPLY LINE - 7/8", RETURN LINE - 7/8"

Multi-Deck Curved Glass Dome Deli/Meat/Seafood Merchandiser

PDNUM - 4′, 6′, 8′ & 12′

Electrical Data

Model			Dome Fans per Case	Standard Fans		High Efficiency Fans		Service Dome Fans		Anti-Condensate Heaters		Defrost Heaters[1]			
				120 Volts		120 Volts		120 Volts		120 Volts		208 Volts		240 Volts	
				Amps	Watts	Amps	Watts	Amps	Watts	Amps	Watts	Amps	Watts	Amps	Watts
PDNUM	4′	3	2	0.68	34	0.30	22	0.52	52	0.55	66	1.92	400	2.22	532
	6′	4	2	1.36	68	0.60	44	0.52	52	1.03	124	2.88	600	3.33	798
	8′	4	3	1.36	68	0.60	44	0.78	78	1.03	124	3.85	800	4.44	1065
	12′	6	4	2.04	102	0.90	66	1.04	104	1.60	192	5.77	1200	6.67	1600

[1] When using electric defrost in both the service and self-service sections of the case, double the values.

Lighting Data

Model		Bulbs per Row	Bulb Length	Typical per Light Row		Maximum Lighting	
				120 Volts		120 Volts	
				Amps	Watts	Amps	Watts
PDNUM	4′	1	4′	0.23	28	0.92	110
	6′	2	3′	0.37	44	1.48	178
	8′	2	4′	0.47	56	1.88	226
	12′	3	4′	0.70	84	2.80	336

Guidelines & Control Settings - Self Service Portion

Model	BTUH/ft[2]	Coil[3] Type	Evaporator (°F)	Superheat Set Point @ Bulb (°F)	Discharge Air (°F)	Return Air (°F)	Discharge Air Velocity[4] (FPM)
PDNUM - Self Service	570	Std.	17	6-8	33	40	260
PDNUM - Service Dome	290	Std.	17	6-8	30	33	360
PDNUM - Self Service	570	Enh.	22	6-8	33	40	260
PDNUM - Service Dome	290	Enh.	22	6-8	30	33	360

[2] BTUHs/ft listed are for parallel operation. Conventional ratings may be approximated by multiplying listed rating by 1.04.[4] [4] [3] Coil type is either Standard Efficiency (Std.) or Enhanced Efficiency (Enh.).

[4] Average discharge air velocity at peak of defrost.

Defrost Controls

Model	Defrosts Per Day	Run-Off Time (min)	Electric Defrost		Timed Off Defrost		Hot Gas		Reverse Air Defrost	
			Fail-safe (min)	Termination Temp. (°F)	Fail-safe (min)	Termination Temp. (°F)	Fail-safe (min)	Termination Temp. (°F)	Fail-safe (min)	Termination Temp. (°F)
PDNUM - Self Service	4	6 - 8	30	47	30	47	26	45	- - -[5]	- - -
PDNUM - Service Dome	4	6 - 8	30	47	30	47	26	45	- - -	- - -

[5] NOTE: - - - not an option on this case model.

Medium Temperature Defrost Schedule

No. Per Day	Hours
1	12 midnight
2	12 am - 12 pm
3	6 am - 2 pm - 10 pm
4	12 - 6 am - 12 - 6 pm

All measurements are taken per ARI 1200 - 2002 specifications.

NSF COMPONENT
c UL us
Hill PHOENIX EXCELLENCE
A DOVER COMPANY

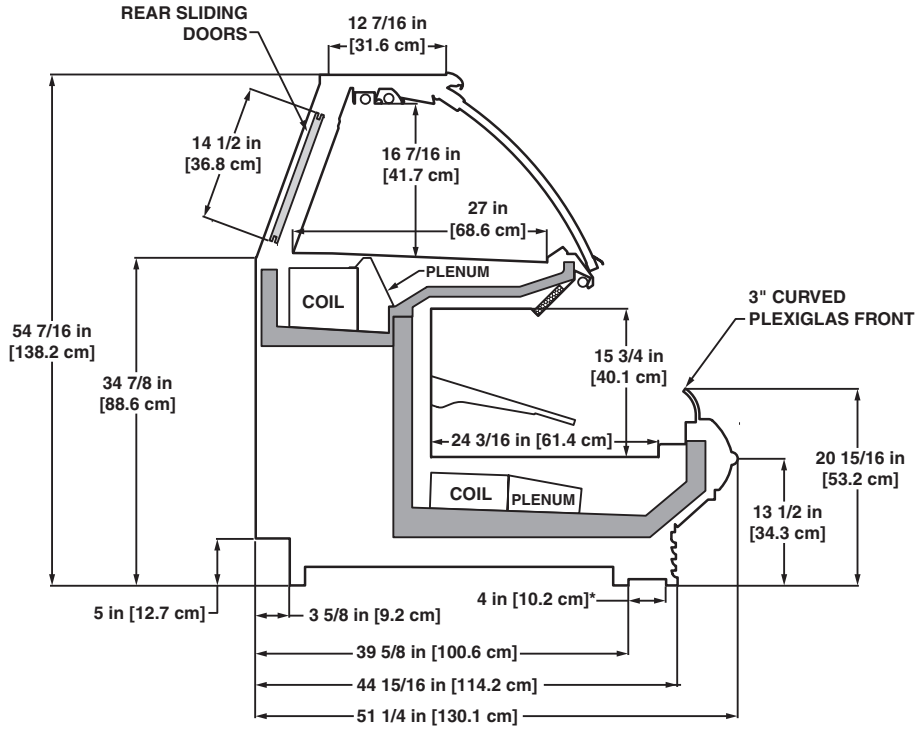

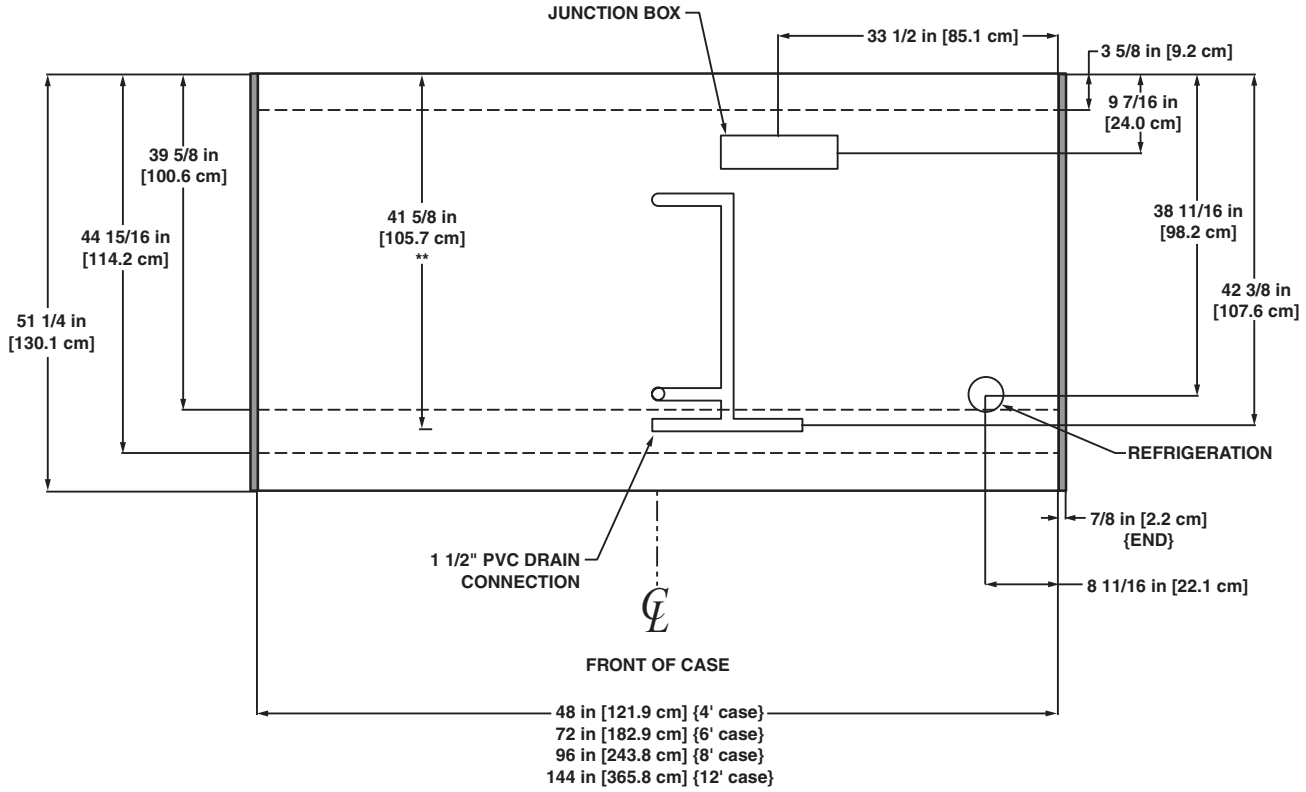

NOTES:

* STUB-UP AREA
** RECOMMENDED STUB-UP CENTERLINE FOR ELECTRICAL AND HUB DRAINS

- SUCTION LINE - 7/8", LIQUID LINE - 1/2"
- AVAILABLE SHELF SIZES: 10", 12" & 14"

NSF COMPONENT

A DOVER COMPANY

Multi-Deck Curved Glass Dome Meat/Seafood Merchandiser

PMNUM - 4′, 6′, 8′ & 12′

Electrical Data

Model		Fans[1] per Case	Standard Fans 120 Volts Amps	Standard Fans 120 Volts Watts	High Efficiency Fans 120 Volts Amps	High Efficiency Fans 120 Volts Watts	Anti-Condensate Heaters 120 Volts Amps	Anti-Condensate Heaters 120 Volts Watts	Secondary[2] Coolant Pump 120 Volts Amps	Secondary[2] Coolant Pump 120 Volts Watts	Defrost Heaters 208 Volts Amps	Defrost Heaters 208 Volts Watts	Defrost Heaters 240 Volts Amps	Defrost Heaters 240 Volts Watts
PMNUM	4′	3	0.68	34	0.30	22	0.55	66	2.10	252	1.92	400	2.22	532
	6′	4	1.36	68	0.60	44	1.03	124	2.10	252	2.88	600	3.33	798
	8′	4	1.36	68	0.60	44	1.03	124	2.10	252	3.85	800	4.44	1065
	12′	6	2.04	102	0.90	66	1.60	192	2.10	252	5.77	1200	6.67	1600

[1] Applicable for self service portion of PMNUM case only.

[2] Secondary coolant pump is only applicable for the semi-self-contained version of the service dome.

Lighting Data

Model		Bulbs per Row	Bulb Length	Typical per Light Row 120 Volts Amps	Typical per Light Row 120 Volts Watts	Maximum Lighting 120 Volts Amps	Maximum Lighting 120 Volts Watts
PMNUM	4′	1	4′	0.23	28	0.70	84
	6′	2	3′	0.37	44	1.10	132
	8′	2	4′	0.47	56	1.40	168
	12′	3	4′	0.70	84	2.10	252

Cut in / Cut Out

	ASHRAE Conditions[3] Cut Out Temp. (°F)	ASHRAE Conditions[3] Cut in Temp. (°F)	Suggested Meat Prep. Settings[4] Cut Out Temp. (°F)	Suggested Meat Prep. Settings[4] Cut in Temp. (°F)
Pans	26	31	29	33
Top Coil	26	31	29	34

[3] These temperatures are based on cases running at ASHRAE conditions.

[4] These specifications should be considered a guide and may need to be adjusted based on store conditions. Because these cases are often installed in stores near a meat preparation area where standard ASHRAE conditions may not apply; the following suggested meat prep. setting may prove useful.

Guidelines & Control Settings - Semi-Self-Contained

Model	BTUH/ft[5]	Evaporator (°F)	Superheat Set Point @ Bulb (°F)	Discharge Air (°F)	Return Air (°F)	Discharge Air Velocity[6] (FPM)
PMNUM - Self Service	840	17	6-8	29	44	275 - 300

Model	BTUH/ft[5]	Supply Temp. (°F)	Chiller Temp. (°F)	Flow Rate[7] GPM/ft	Charge[8] GAL/ft	Max. Working Pressure (PSIG)	Max. Static Pressure (PSIG)
PMNUM - Dome[9]	350	20	15	0.75	0.25	50	70

[5] BTUHs/ft listed are for parallel operation. Conventional ratings may be approximated by multiplying listed rating by 1.04.

[6] Average discharge air velocity at peak of defrost.

[7] Minimum flow rate.

[8] For semi-self-contained cases add 2.75 gallon of fluid for the chiller to the total charge.

[9] The dome portion of the PMNUM case operates using our patented secondary coolant Coolgenix technology.

Guidelines & Control Settings - Remote Secondary

Model	BTUH/ft	Supply Temp. (°F)	Flow Rate GPM/ft	Charge GAL/ft
PMNUM - Self Service	840	20	0.65	0.54
PMNUM - Dome	350	20	0.75	0.50

Defrost Controls

Model	Defrosts Per Day	Run-Off Time (min)	Electric Defrost Fail-safe (min)	Electric Defrost Termination Temp. (°F)	Timed Off Defrost Fail-safe (min)	Timed Off Defrost Termination Temp. (°F)	Warm Fluid Fail-safe (min)	Warm Fluid Termination Temp. (°F)	Reverse Air Defrost Fail-safe (min)	Reverse Air Defrost Termination Temp. (°F)
PMNUM - Self Service	6	6 - 8	30	47	30	47	15[11]	45[11]	- - -	- - -
PMNUM - Dome	1	5	- - -[10]	- - -	60	45	- - -	- - -	- - -	- - -

[10] NOTE: - - - not an option on this case model.

[11] This option only available on the remote secondary version.

HILL PHOENIX EXCELLENCE

NSF COMPONENT c UL us

A DOVER COMPANY

All measurements are taken per ARI 1200 - 2002 specifications.

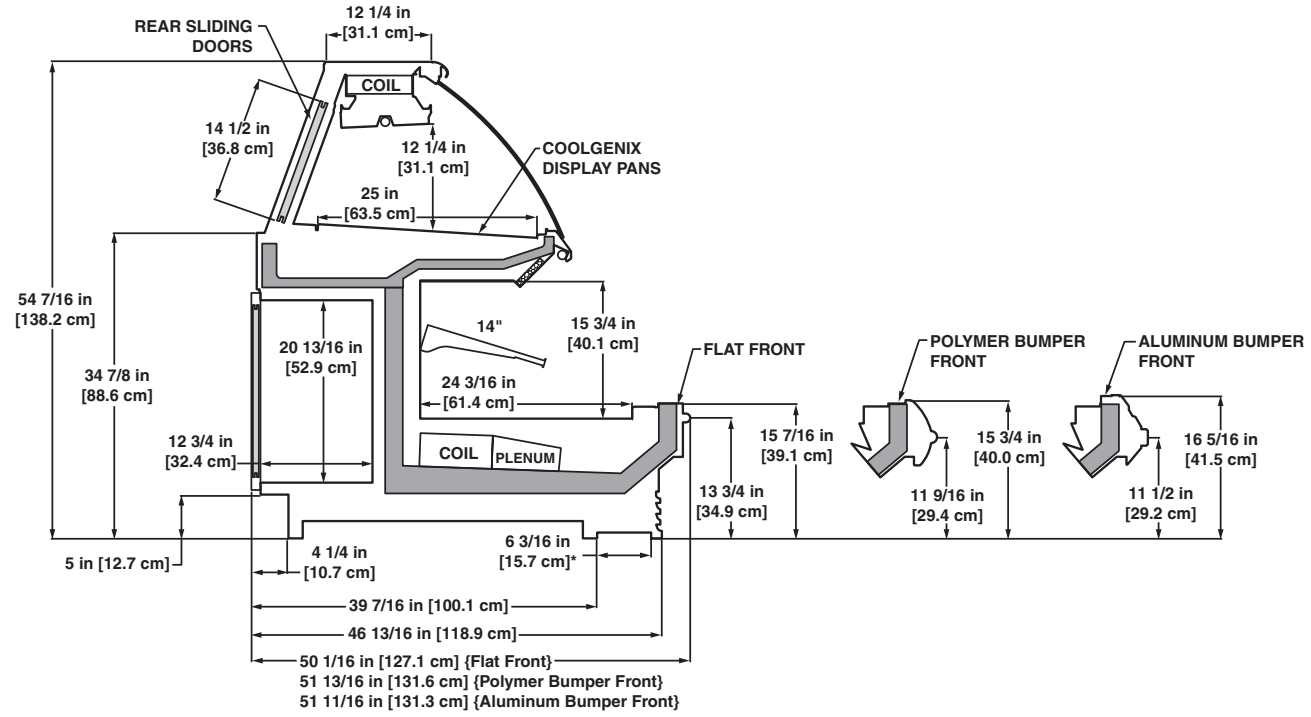

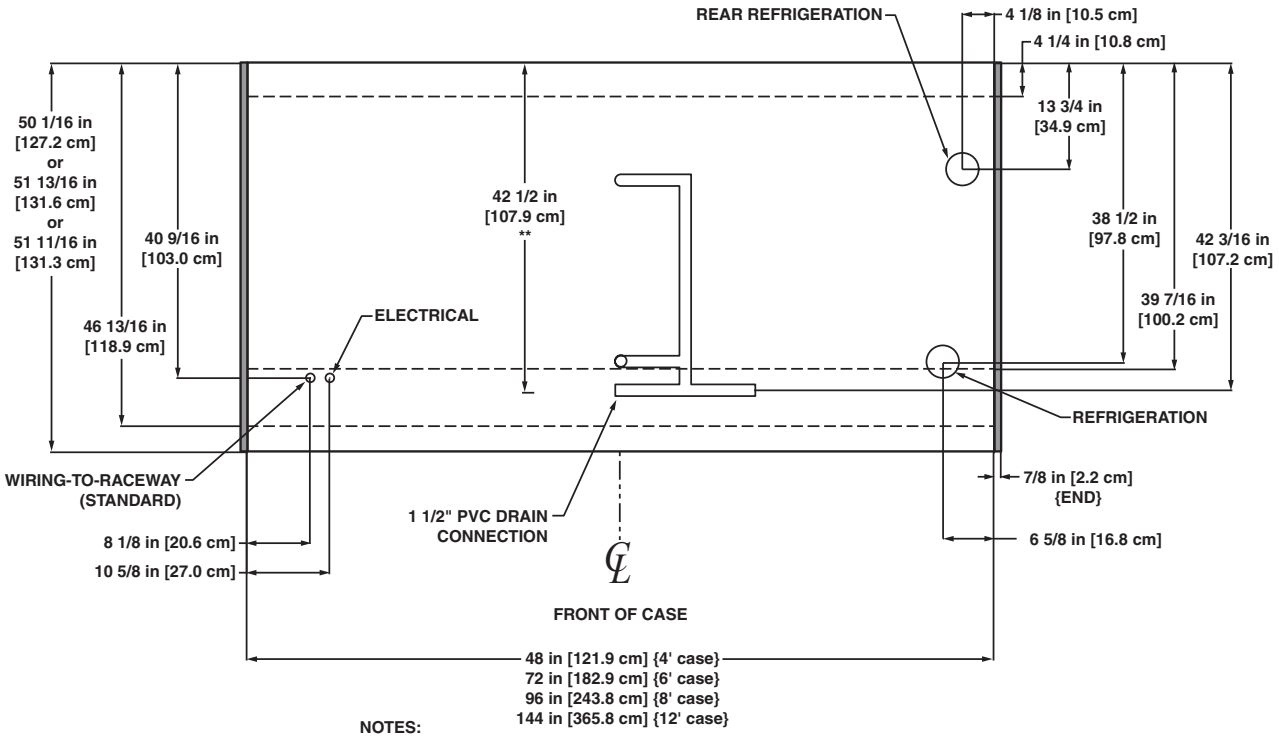

NOTES:

* STUB-UP AREA
** RECOMMENDED STUB-UP CENTERLINE FOR ELECTRICAL AND HUB DRAINS

- ENDS ADD APPROXIMATELY 1" TO CASE HEIGHT
- SUCTION LINE - 7/8", LIQUID LINE - 1/2"
- AVAILABLE SHELF SIZES: 10", 12", 14" & 16"
- PRODUCT ON TOP SHELF SHOULD BE 3" BELOW DISCHARGE
- RECOMMENDED SHELF CONFIGURATION IS ROWS: 1-14"

Multi-Deck Flat Glass Dome Meat/Seafood Merchandiser

PMFNUM - 4′, 6′, 8′ & 12′

Electrical Data

Model		Fans[1] per Case	Standard Fans 120 Volts Amps	Standard Fans 120 Volts Watts	High Efficiency Fans 120 Volts Amps	High Efficiency Fans 120 Volts Watts	Anti-Condensate Heaters 120 Volts Amps	Anti-Condensate Heaters 120 Volts Watts	Secondary[2] Coolant Pump 120 Volts Amps	Secondary[2] Coolant Pump 120 Volts Watts	Defrost Heaters 208 Volts Amps	Defrost Heaters 208 Volts Watts	Defrost Heaters 240 Volts Amps	Defrost Heaters 240 Volts Watts
PMFNUM	4′	3	0.68	34	0.30	22	0.55	66	2.10	252	1.92	400	2.22	532
	6′	4	1.36	68	0.60	44	1.03	124	2.10	252	2.88	600	3.33	798
	8′	4	1.36	68	0.60	44	1.03	124	2.10	252	3.85	800	4.44	1065
	12′	6	2.04	102	0.90	66	1.60	192	2.10	252	5.77	1200	6.67	1600

[1] Applicable for self service portion of PMFNUM case only.

[2] Secondary coolant pump is only applicable for the semi-self-contained version of the service dome.

Lighting Data

Model		Bulbs per Row	Bulb Length	Typical per Light Row 120 Volts Amps	Typical per Light Row 120 Volts Watts	Maximum Lighting 120 Volts Amps	Maximum Lighting 120 Volts Watts
PMFNUM	4′	1	4′	0.23	28	0.70	84
	6′	2	3′	0.37	44	1.10	132
	8′	2	4′	0.47	56	1.40	168
	12′	3	4′	0.70	84	2.10	252

Cut in / Cut Out

	ASHRAE Conditions[3] Cut Out Temp. (°F)	ASHRAE Conditions[3] Cut in Temp. (°F)	Suggested Meat Prep. Settings[4] Cut Out Temp. (°F)	Suggested Meat Prep. Settings[4] Cut in Temp. (°F)
Pans	26	31	29	33
Top Coil	26	31	29	34

[3] These temperatures are based on cases running at ASHRAE conditions.

[4] These specifications should be considered a guide and may need to be adjusted based on store conditions. Because these cases are often installed in stores near a meat preparation area where standard ASHRAE conditions may not apply; the following suggested meat prep. setting may prove useful.

Guidelines & Control Settings - Semi-Self-Contained

Model	BTUH/ft[5]	Evaporator (°F)	Superheat Set Point @ Bulb (°F)	Discharge Air (°F)	Return Air (°F)	Discharge Air Velocity[6] (FPM)
PMFNUM - Self Service	840	17	6-8	29	44	275 - 300

Model	BTUH/ft[5]	Supply Temp. (°F)	Chiller Temp. (°F)	Flow Rate[7] GPM/ft	Charge[8] GAL/ft	Max. Working Pressure (PSIG)	Max. Static Pressure (PSIG)
PMFNUM - Dome[9]	350	20	15	0.75	0.25	50	70

[5] BTUHs/ft listed are for parallel operation. Conventional ratings may be approximated by multiplying listed rating by 1.04.

[6] Average discharge air velocity at peak of defrost.

[7] Minimum flow rate.

[8] For semi-self-contained cases add 2.75 gallon of fluid for the chiller to the total charge.

[9] The dome portion of the PMFNUM case operates using our patented secondary coolant Coolgenix technology.

Guidelines & Control Settings - Remote Secondary

Model	BTUH/ft	Supply Temp. (°F)	Flow Rate GPM/ft	Charge GAL/ft
PMFNUM - Self Service	840	20	0.65	0.54
PMFNUM - Dome	350	20	0.75	0.50

Defrost Controls

Model	Defrosts Per Day	Run-Off Time (min)	Electric Defrost Fail-safe (min)	Electric Defrost Termination Temp. (°F)	Timed Off Defrost Fail-safe (min)	Timed Off Defrost Termination Temp. (°F)	Warm Fluid Fail-safe (min)	Warm Fluid Termination Temp. (°F)	Reverse Air Defrost Fail-safe (min)	Reverse Air Defrost Termination Temp. (°F)
PMFNUM - Self Service	6	6 - 8	30	47	30	47	15[11]	45[11]	- - -	- - -
PMFNUM - Dome	1	5	- - -[10]	- - -	60	45	- - -	- - -	- - -	- - -

[10] NOTE: - - - not an option on this case model.

[11] This option only available on the remote secondary version.

HILL PHOENIX EXCELLENCE

NSF COMPONENT c UL us

A DOVER COMPANY

All measurements are taken per ARI 1200 - 2002 specifications.

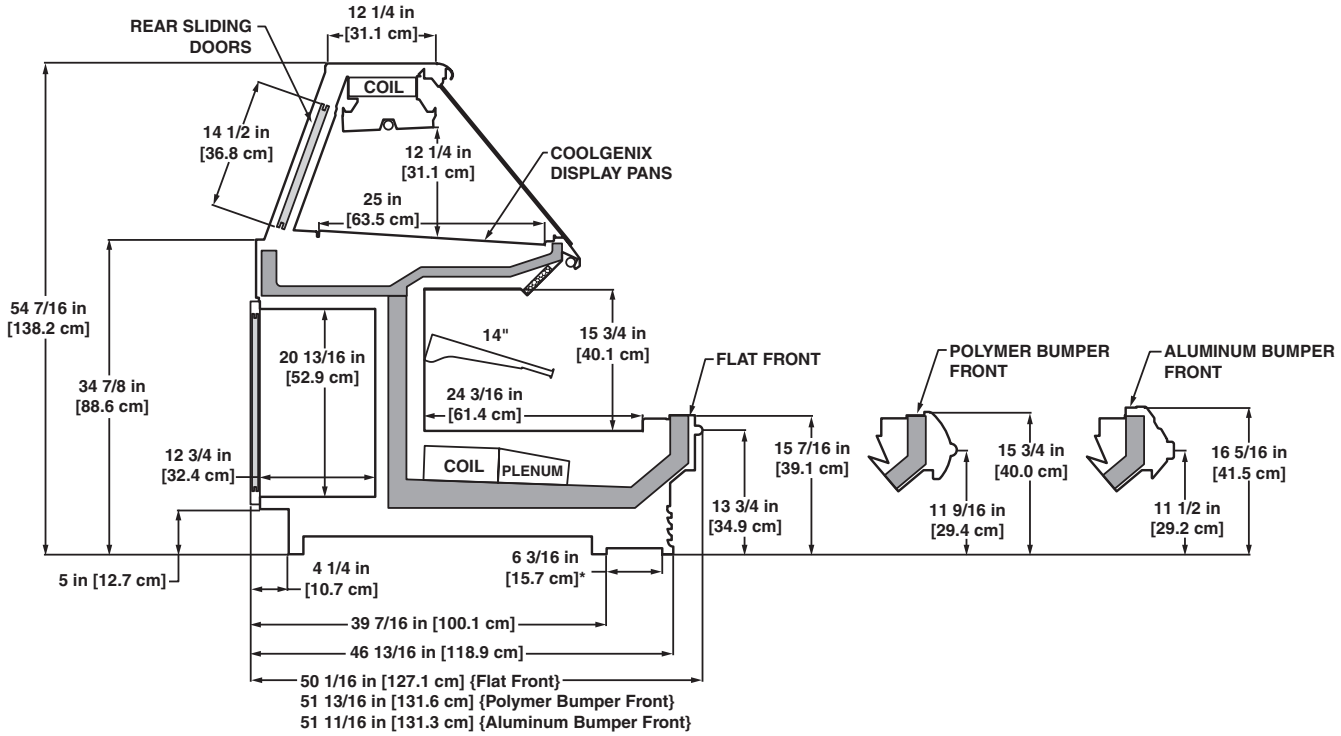

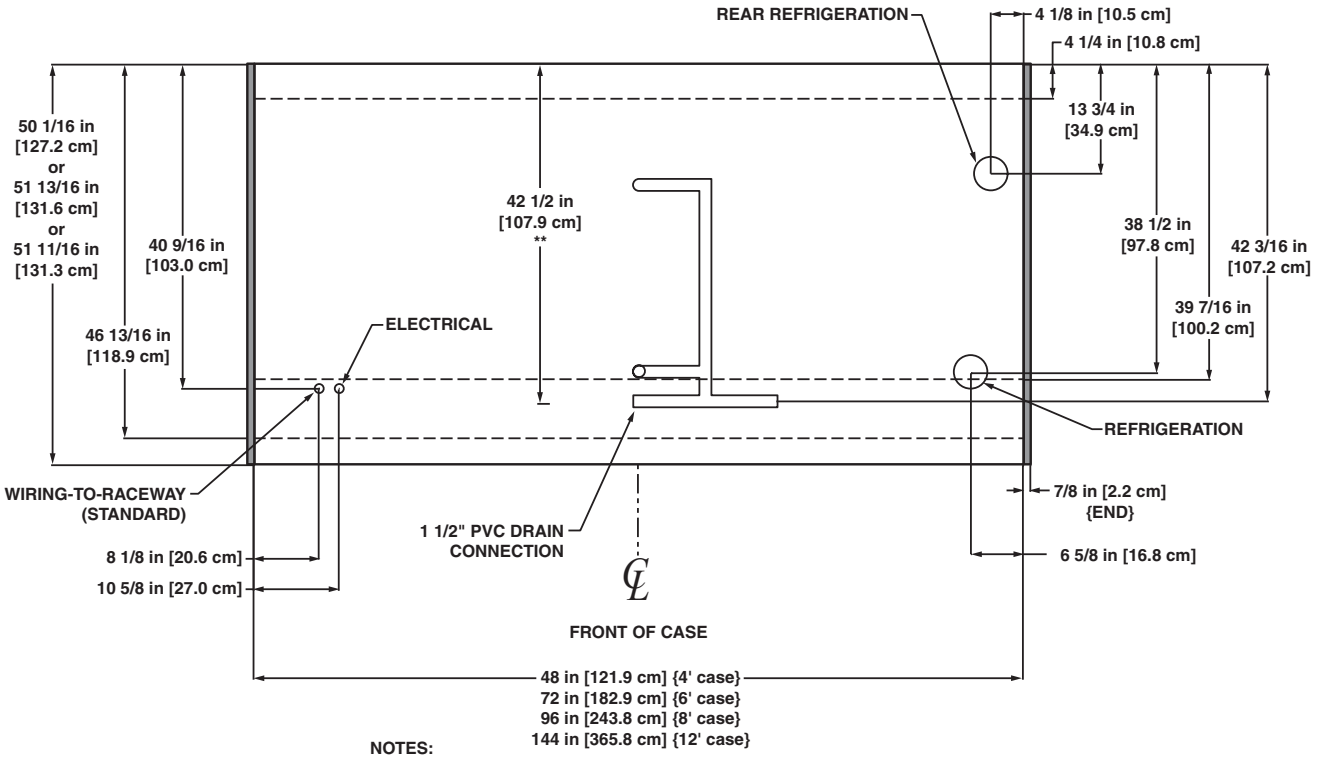

NOTES:

* STUB-UP AREA
** RECOMMENDED STUB-UP CENTERLINE FOR ELECTRICAL AND HUB DRAINS

- ENDS ADD APPROXIMATELY 1" TO CASE HEIGHT
- SUCTION LINE - 7/8", LIQUID LINE - 1/2"
- AVAILABLE SHELF SIZES: 10", 12", 14" & 16"
- PRODUCT ON TOP SHELF SHOULD BE 3" BELOW DISCHARGE
- RECOMMENDED SHELF CONFIGURATION IS ROWS: 1-14"

Multi-Deck Curved Glass Dome Meat/Seafood Merchandiser

PMN2UM - 4′, 6′, 8′ & 12′

Electrical Data

Model		Fans[1] per Case	Standard Fans 120 Volts Amps	Standard Fans 120 Volts Watts	High Efficiency Fans 120 Volts Amps	High Efficiency Fans 120 Volts Watts	Anti-Condensate Heaters 120 Volts Amps	Anti-Condensate Heaters 120 Volts Watts	Secondary[2] Coolant Pump 120 Volts Amps	Secondary[2] Coolant Pump 120 Volts Watts	Defrost Heaters 208 Volts Amps	Defrost Heaters 208 Volts Watts	Defrost Heaters 240 Volts Amps	Defrost Heaters 240 Volts Watts
PMN2UM	4′	3	0.68	34	0.30	22	0.55	66	2.10	252	1.92	400	2.22	532
	6′	4	1.36	68	0.60	44	1.03	124	2.10	252	2.88	600	3.33	798
	8′	4	1.36	68	0.60	44	1.03	124	2.10	252	3.85	800	4.44	1065
	12′	6	2.04	102	0.90	66	1.60	192	2.10	252	5.77	1200	6.67	1600

[1] Applicable for self service portion of PMN2UM case only.

[2] Secondary coolant pump is only applicable for the semi-self-contained version of the service dome.

Lighting Data

Model		Bulbs per Row	Bulb Length	Typical per Light Row 120 Volts Amps	Typical per Light Row 120 Volts Watts	Maximum Lighting 120 Volts Amps	Maximum Lighting 120 Volts Watts
PMN2UM	4′	1	4′	0.23	28	0.92	110
	6′	2	3′	0.37	44	1.48	178
	8′	2	4′	0.47	56	1.88	226
	12′	3	4′	0.70	84	2.80	336

Cut in / Cut Out

	ASHRAE Conditions[3] Cut Out Temp. (°F)	ASHRAE Conditions[3] Cut in Temp. (°F)	Suggested Meat Prep. Settings[4] Cut Out Temp. (°F)	Suggested Meat Prep. Settings[4] Cut in Temp. (°F)
Pans	26	31	29	33
Top Coil	26	31	29	34

[3] These temperatures are based on cases running at ASHRAE conditions.

[4] These specifications should be considered a guide and may need to be adjusted based on store conditions. Because these cases are often installed in stores near a meat preparation area where standard ASHRAE conditions may not apply; the following suggested meat prep. setting may prove useful.

Guidelines & Control Settings - Semi-Self-Contained

Model	BTUH/ft[5]	Evaporator (°F)	Superheat Set Point @ Bulb (°F)	Discharge Air (°F)	Return Air (°F)	Discharge Air Velocity[6] (FPM)
PMN2UM - Self Service	840	17	6-8	29	44	275 - 300

Model	BTUH/ft[5]	Supply Temp. (°F)	Chiller Temp. (°F)	Flow Rate[7] GPM/ft	Charge[8] GAL/ft	Max. Working Pressure (PSIG)	Max. Static Pressure (PSIG)
PMN2UM - Dome[9]	350	20	15	0.75	0.25	50	70

[5] BTUHs/ft listed are for parallel operation. Conventional ratings may be approximated by multiplying listed rating by 1.04.

[6] Average discharge air velocity at peak of defrost.

[7] Minimum flow rate.

[8] For semi-self-contained cases add 2.75 gallon of fluid for the chiller to the total charge.

[9] The dome portion of the PMN2UM case operates using our patented secondary coolant Coolgenix technology.

Defrost Controls

Model	Defrosts Per Day	Run-Off Time (min)	Electric Defrost Fail-safe (min)	Electric Defrost Termination Temp. (°F)	Timed Off Defrost Fail-safe (min)	Timed Off Defrost Termination Temp. (°F)	Warm Fluid Fail-safe (min)	Warm Fluid Termination Temp. (°F)	Reverse Air Defrost Fail-safe (min)	Reverse Air Defrost Termination Temp. (°F)
PMN2UM - Self Service	6	6 - 8	30	47	30	47	- - -	- - -	- - -	- - -
PMN2UM - Dome	1	5	- - -[10]	- - -	60	45	- - -	- - -	- - -	- - -

[10] NOTE: - - - not an option on this case model.

Hill PHOENIX EXCELLENCE

NSF COMPONENT c UL us

A DOVER COMPANY

All measurements are taken per ARI 1200 - 2002 specifications.

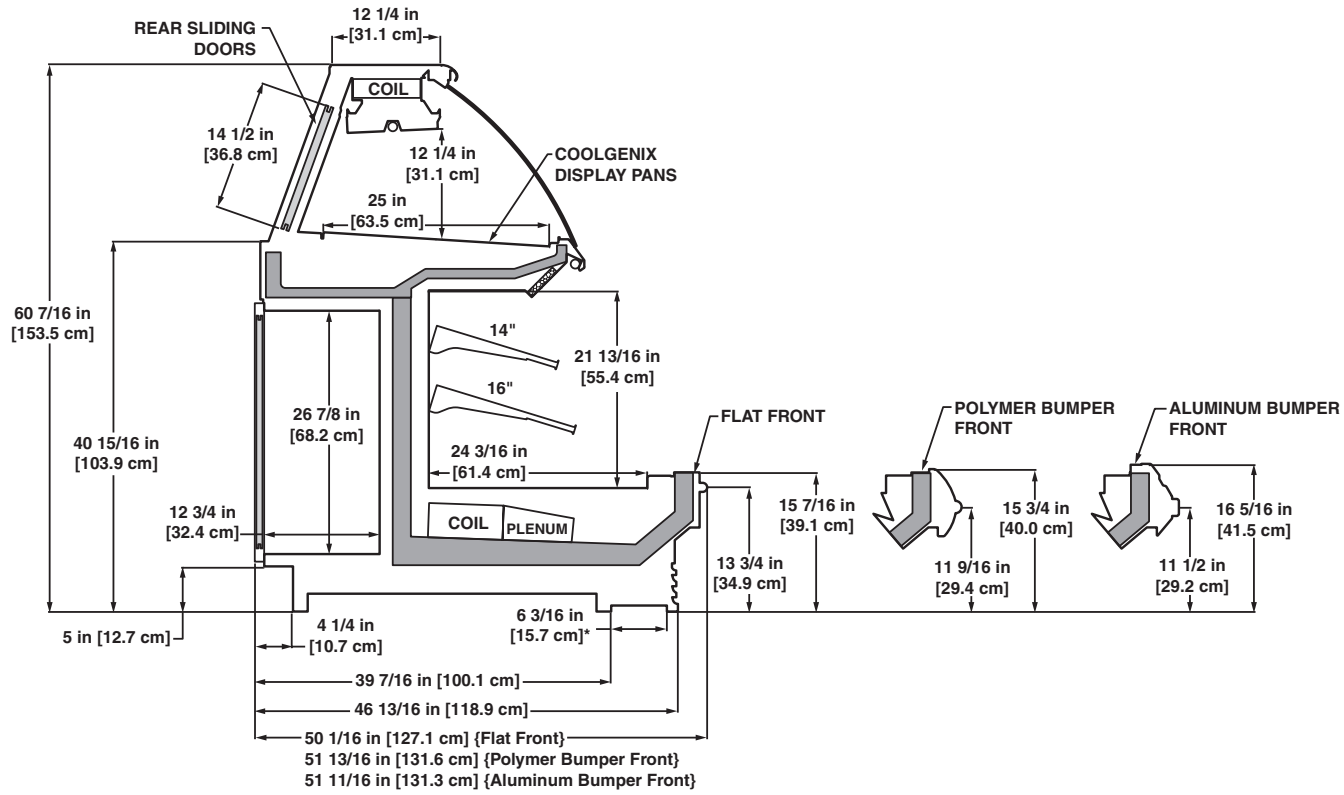

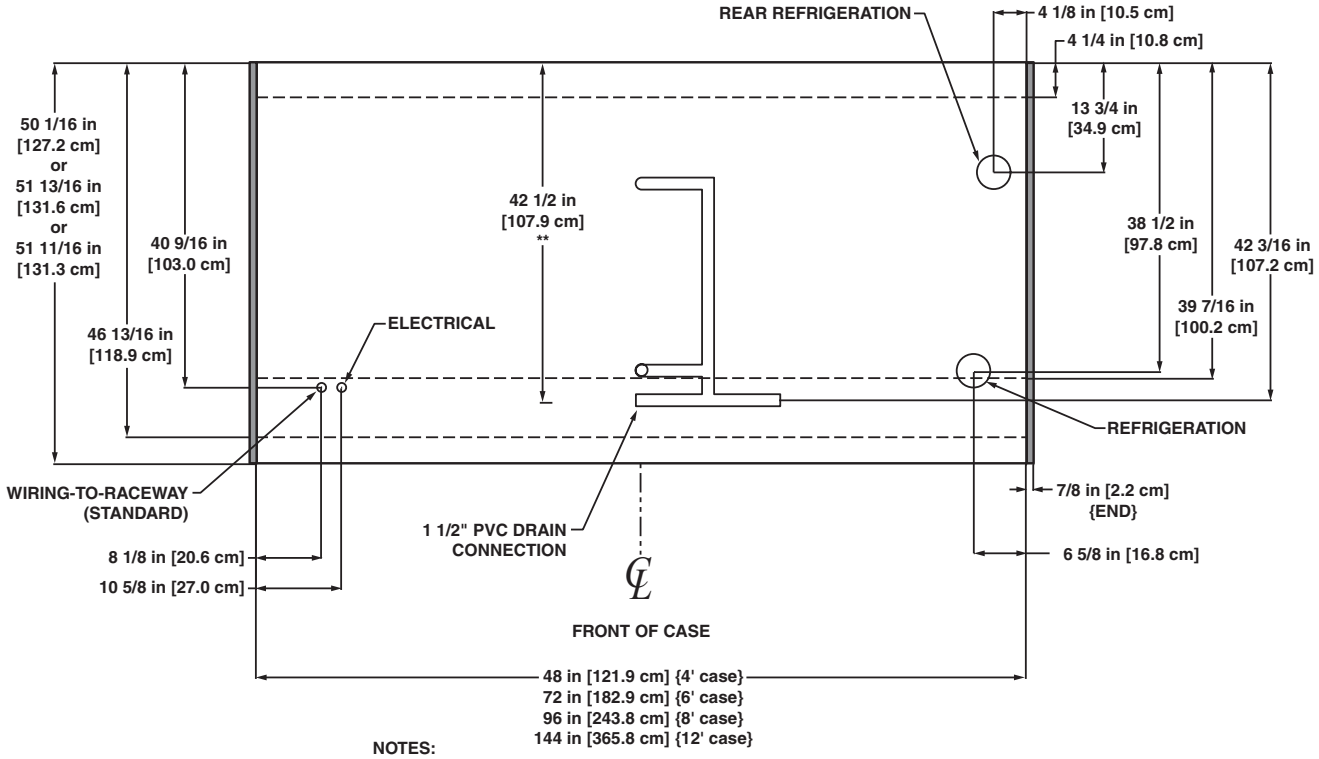

NOTES:

* STUB-UP AREA
** RECOMMENDED STUB-UP CENTERLINE FOR ELECTRICAL AND HUB DRAINS

- ENDS ADD APPROXIMATELY 1" TO CASE HEIGHT
- SUCTION LINE - 7/8", LIQUID LINE - 1/2"
- AVAILABLE SHELF SIZES: 10", 12", 14" & 16"
- PRODUCT ON TOP SHELF SHOULD BE 3" BELOW DISCHARGE
- RECOMMENDED SHELF CONFIGURATION IS ROWS: 1-14" & 1-16"

Multi-Deck Flat Glass Dome Meat/Seafood Merchandiser

PMFN2UM - 4′, 6′, 8′ & 12′

Electrical Data

Model		Fans[1] per Case	Standard Fans 120 Volts Amps	Standard Fans 120 Volts Watts	High Efficiency Fans 120 Volts Amps	High Efficiency Fans 120 Volts Watts	Anti-Condensate Heaters 120 Volts Amps	Anti-Condensate Heaters 120 Volts Watts	Secondary[2] Coolant Pump 120 Volts Amps	Secondary[2] Coolant Pump 120 Volts Watts	Defrost Heaters 208 Volts Amps	Defrost Heaters 208 Volts Watts	Defrost Heaters 240 Volts Amps	Defrost Heaters 240 Volts Watts
PMFN2UM	4′	3	0.68	34	0.30	22	0.55	66	2.10	252	1.92	400	2.22	532
	6′	4	1.36	68	0.60	44	1.03	124	2.10	252	2.88	600	3.33	798
	8′	4	1.36	68	0.60	44	1.03	124	2.10	252	3.85	800	4.44	1065
	12′	6	2.04	102	0.90	66	1.60	192	2.10	252	5.77	1200	6.67	1600

[1] Applicable for self service portion of PMFN2UM case only.

[2] Secondary coolant pump is only applicable for the semi-self-contained version of the service dome.

Lighting Data

Model		Bulbs per Row	Bulb Length	Typical per Light Row 120 Volts Amps	Typical per Light Row 120 Volts Watts	Maximum Lighting 120 Volts Amps	Maximum Lighting 120 Volts Watts
PMFN2UM	4′	1	4′	0.23	28	0.92	110
	6′	2	3′	0.37	44	1.48	178
	8′	2	4′	0.47	56	1.88	226
	12′	3	4′	0.70	84	2.80	336

Cut in / Cut Out

	ASHRAE Conditions[3] Cut Out Temp. (°F)	ASHRAE Conditions[3] Cut in Temp. (°F)	Suggested Meat Prep. Settings[4] Cut Out Temp. (°F)	Suggested Meat Prep. Settings[4] Cut in Temp. (°F)
Pans	26	31	29	33
Top Coil	26	31	29	34

[3] These temperatures are based on cases running at ASHRAE conditions.

[4] These specifications should be considered a guide and may need to be adjusted based on store conditions. Because these cases are often installed in stores near a meat preparation area where standard ASHRAE conditions may not apply; the following suggested meat prep. setting may prove useful.

Guidelines & Control Settings - Semi-Self-Contained

Model	BTUH/ft[5]	Evaporator (°F)	Superheat Set Point @ Bulb (°F)	Discharge Air (°F)	Return Air (°F)	Discharge Air Velocity[6] (FPM)
PMFN2UM - Self Service	840	17	6-8	29	44	275 - 300

Model	BTUH/ft[5]	Supply Temp. (°F)	Chiller Temp. (°F)	Flow Rate[7] GPM/ft	Charge[8] GAL/ft	Max. Working Pressure (PSIG)	Max. Static Pressure (PSIG)
PMFN2UM - Dome[9]	350	20	15	0.75	0.25	50	70

[5] BTUHs/ft listed are for parallel operation. Conventional ratings may be approximated by multiplying listed rating by 1.04.

[6] Average discharge air velocity at peak of defrost.

[7] Minimum flow rate.

[8] For semi-self-contained cases add 2.75 gallon of fluid for the chiller to the total charge.

[9] The dome portion of the PMFN2UM case operates using our patented secondary coolant Coolgenix technology.

Defrost Controls

Model	Defrosts Per Day	Run-Off Time (min)	Electric Defrost Fail-safe (min)	Electric Defrost Termination Temp. (°F)	Timed Off Defrost Fail-safe (min)	Timed Off Defrost Termination Temp. (°F)	Warm Fluid Fail-safe (min)	Warm Fluid Termination Temp. (°F)	Reverse Air Defrost Fail-safe (min)	Reverse Air Defrost Termination Temp. (°F)
PMFN2UM - Self Service	6	6 - 8	30	47	30	47	- - -	- - -	- - -	- - -
PMFN2UM - Dome	1	5	- - -[10]	- - -	60	45	- - -	- - -	- - -	- - -

[10] NOTE: - - - not an option on this case model.

Hill PHOENIX EXCELLENCE

NSF COMPONENT c UL us

A DOVER COMPANY

All measurements are taken per ARI 1200 - 2002 specifications.

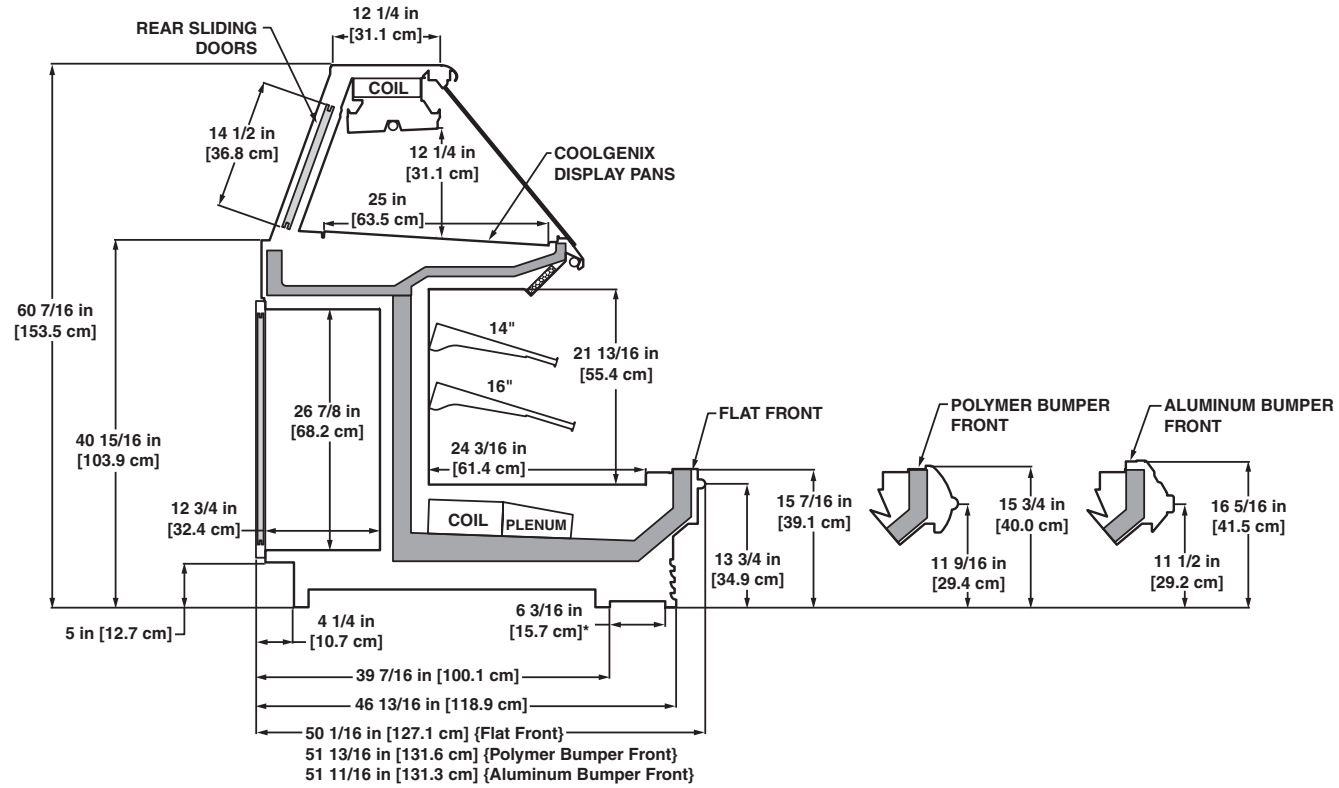

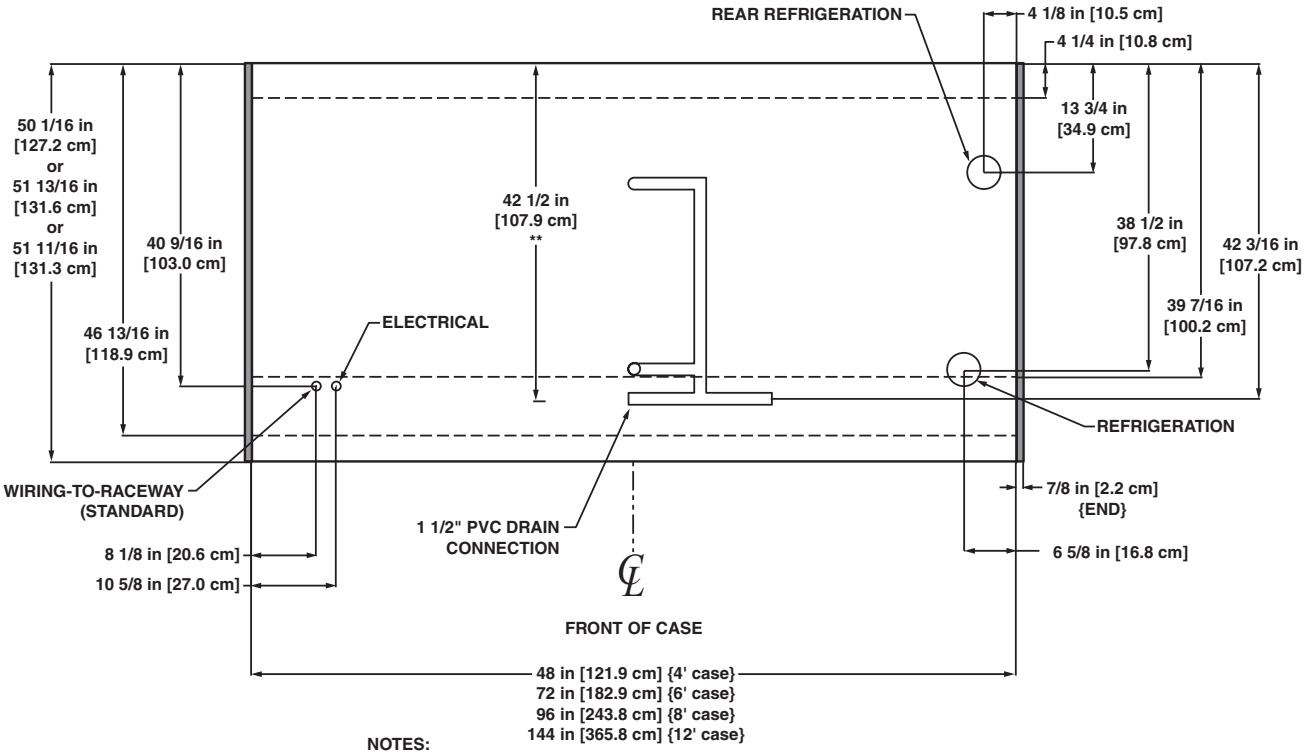

NOTES:

* STUB-UP AREA
** RECOMMENDED STUB-UP CENTERLINE FOR ELECTRICAL AND HUB DRAINS

- ENDS ADD APPROXIMATELY 1" TO CASE HEIGHT
- SUCTION LINE - 7/8", LIQUID LINE - 1/2"
- AVAILABLE SHELF SIZES: 10", 12", 14" & 16"
- PRODUCT ON TOP SHELF SHOULD BE 3" BELOW DISCHARGE
- RECOMMENDED SHELF CONFIGURATION IS ROWS: 1-14" & 1-16"

Secondary Coolant Gravity Coil Meat Merchandiser

PSG - 4′, 6′, 8′, 12, E30 & E45

Electrical Data

Model		Secondary[1] Coolant Pump		Anti-Condensate Heaters	
		120 Volts		120 Volts	
		Amps	Watts	Amps	Watts
PSG	4′	2.00	240	0.55	66
	6′	2.00	240	1.03	124
	8′	2.00	240	1.03	124
	12′	2.00	240	1.60	192
	E30	2.00	240	1.03	124
	E45	2.00	240	1.03	124

[1] Secondary coolant pump is only applicable for the semi-self-contained version.

Lighting Data

Model		Bulbs per Row	Bulb Length	Typical per Light Row		Maximum Lighting	
				120 Volts		120 Volts	
				Amps	Watts	Amps	Watts
PSG	4′	1	4′	0.23	28	0.23	28
	6′	2	3′	0.37	44	0.37	44
	8′	2	4′	0.47	56	0.47	56
	12′	3	4′	0.70	84	0.70	84
	E30	2	3′	0.37	44	0.37	44
	E45	2	3′	0.37	44	0.37	44

Cut in / Cut Out

	Cut Out Temp. (°F)	Cut in Temp. (°F)
Pans	29	33
Top Coil	31	36

Guidelines & Control Settings - Remote Secondary

Model	BTUH/ft	Supply Temp. (°F)	Flow Rate GPM/ft	Charge GAL/ft
PSG	300	26	0.45	0.27

Guidelines & Control Settings - Semi-Self-Contained

Model	BTUH/ft[2]	Supply Temp. (°F)	Chiller Temp. (°F)	Flow Rate[3] GPM/ft	Charge[4] GAL/ft	Max. Working Pressure (PSIG)	Max. Static Pressure (PSIG)
PSG[5]	350	26	20	0.45	0.27	50	70

[2] BTUHs/ft listed are for parallel operation. Conventional ratings may be approximated by multiplying listed rating by 1.04.

[3] Minimum flow rate.

[4] For semi-self-contained cases add 2.75 gallon of fluid for the chiller to the total charge.

[5] When calculating charge E30 and E45 wedges are equivalent to an 8′ case.

Defrost Controls

Model	Top Coil Defrosts Per Day	Run-Off Time (min)	Electric Defrost		Timed Off Defrost		Warm Fluid Defrost		Reverse Air Defrost	
			Fail-safe (min)	Termination Temp. (°F)	Fail-safe (min)	Termination Temp. (°F)	Fail-safe (min)	Termination Temp. (°F)	Fail-safe (min)	Termination Temp. (°F)
PSG	1	5	- - - [6]	- - -	50	45	- - -	- - -	- - -	- - -

[6] NOTE: - - - not an option on this case model.

Hill PHOENIX EXCELLENCE

NSF COMPONENT c UL us

A DOVER COMPANY

All measurements are taken per ARI 1200 - 2002 specifications.

REMOTE & SEMI-SELF-CONTAINED FLAT PANELS

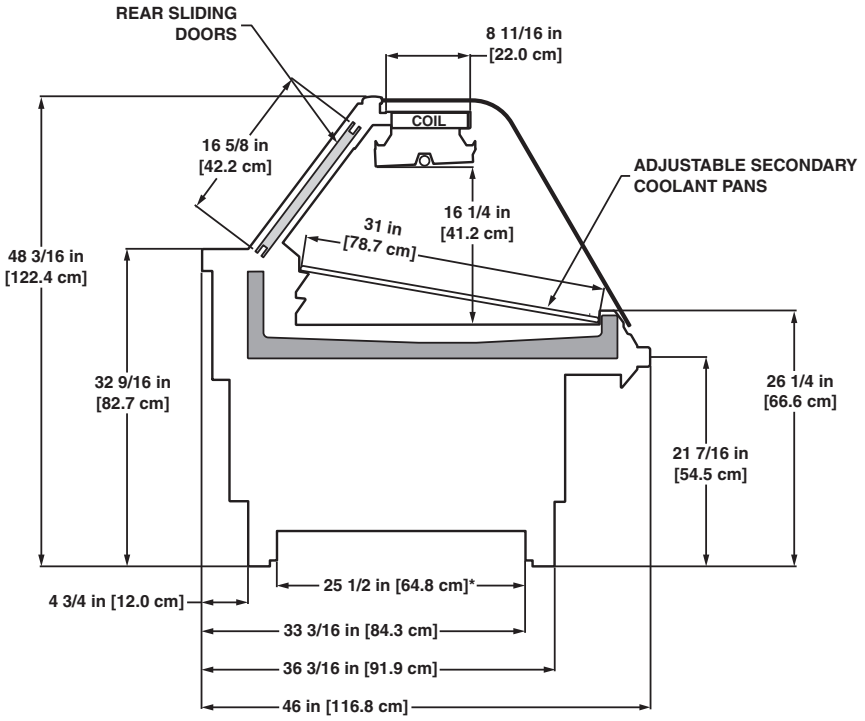

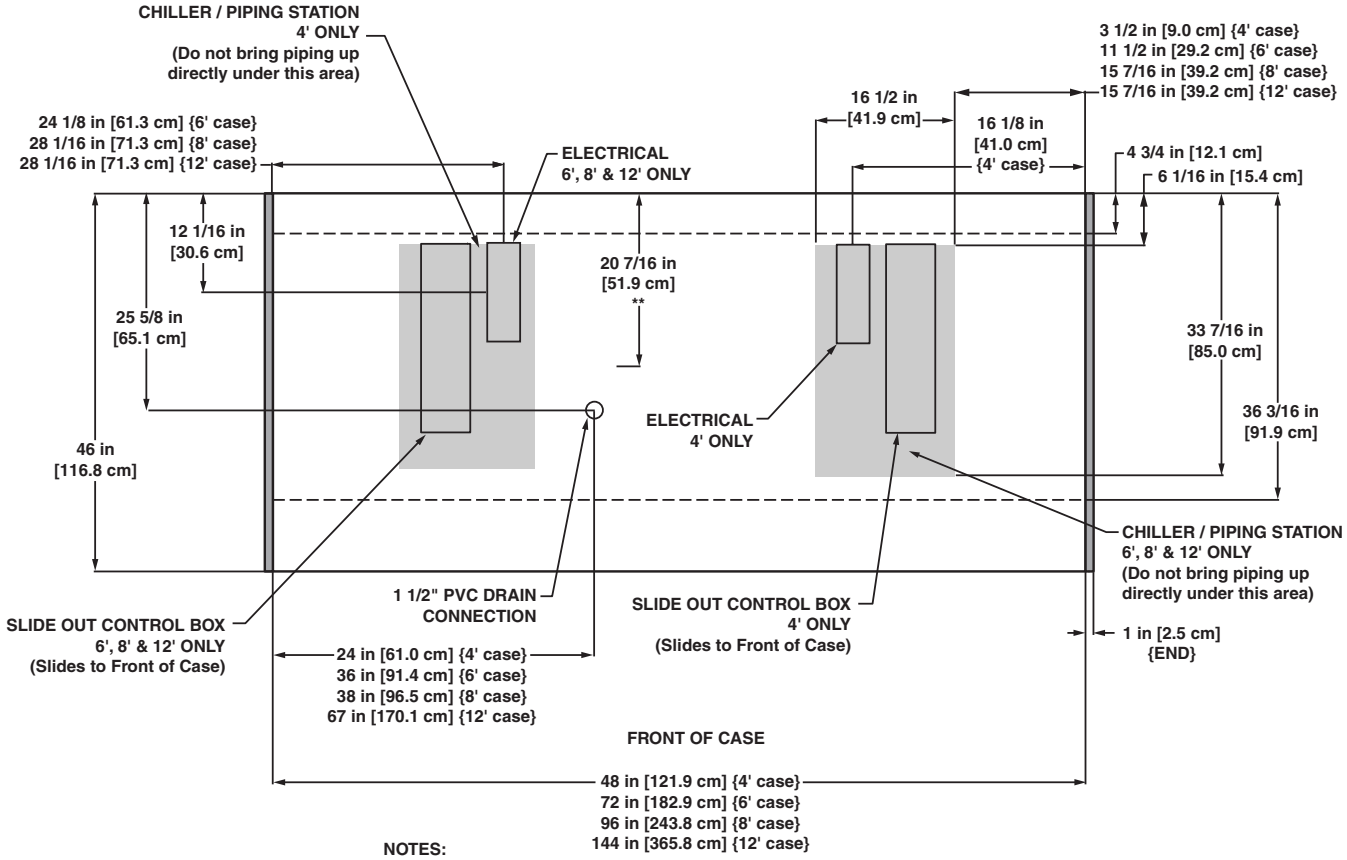

NOTES:

* STUB-UP AREA
** RECOMMENDED STUB-UP CENTERLINE FOR ELECTRICAL AND HUB DRAINS

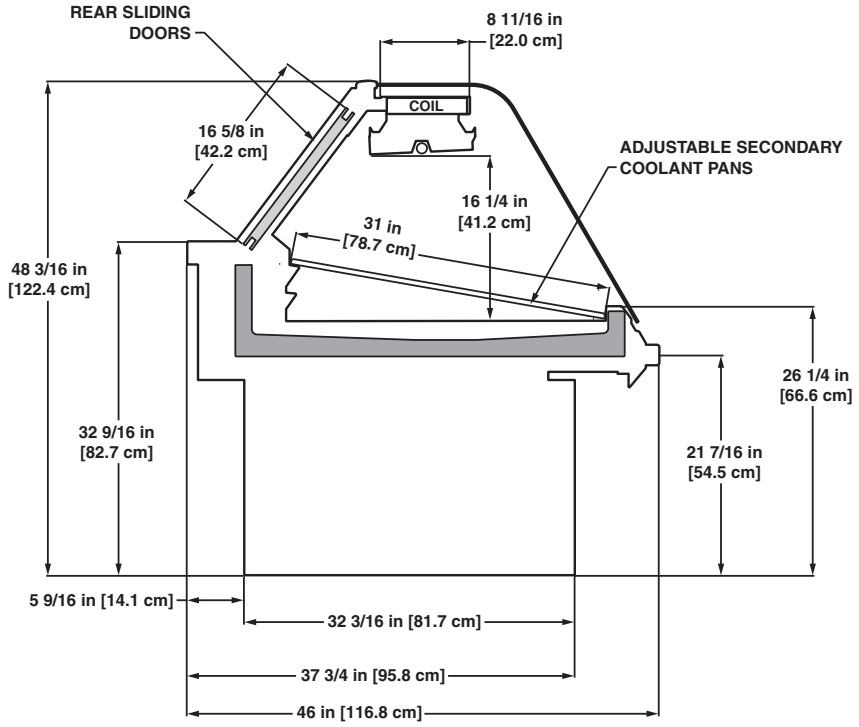
REAR SLIDING DOORS
8 11/16 in [22.0 cm]
COIL
16 5/8 in [42.2 cm]
ADJUSTABLE SECONDARY COOLANT PANS
16 1/4 in [41.2 cm]
31 in [78.7 cm]
48 3/16 in [122.4 cm]
26 1/4 in [66.6 cm]
32 9/16 in [82.7 cm]
21 7/16 in [54.5 cm]
5 9/16 in [14.1 cm]
32 3/16 in [81.7 cm]
37 3/4 in [95.8 cm]
46 in [116.8 cm]

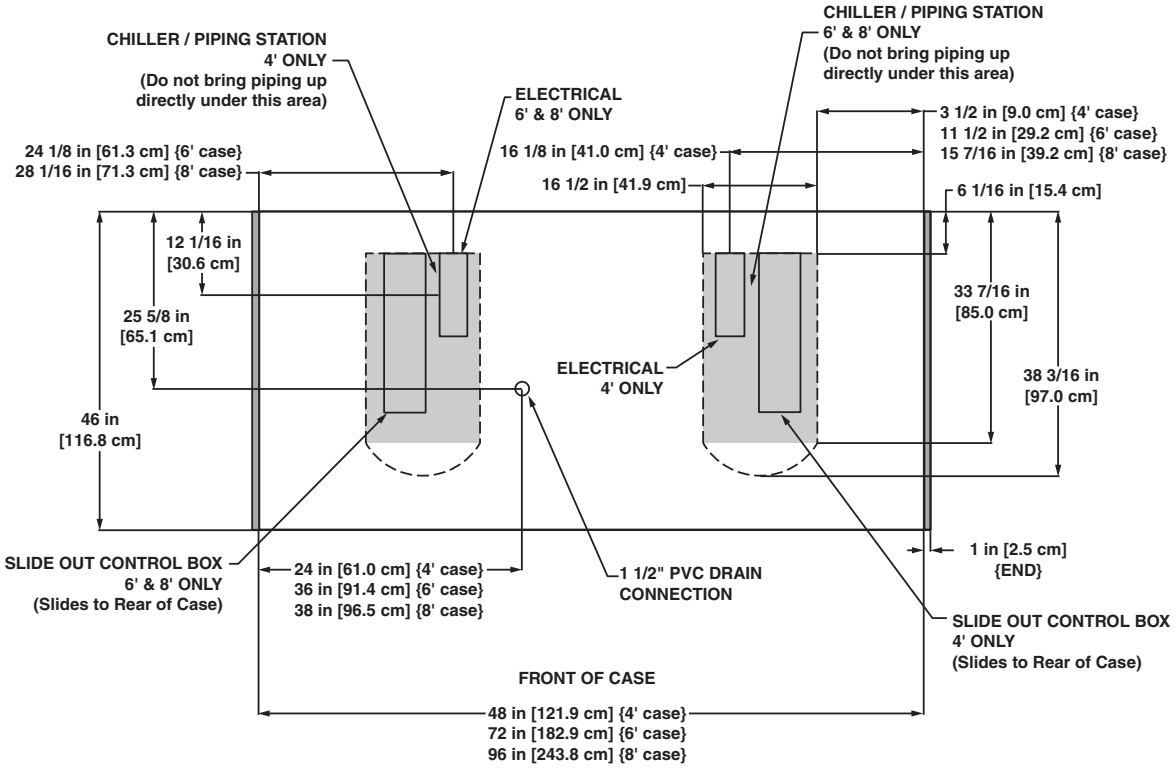
CHILLER / PIPING STATION 4' ONLY (Do not bring piping up directly under this area)
ELECTRICAL 6' & 8' ONLY
CHILLER / PIPING STATION 6' & 8' ONLY (Do not bring piping up directly under this area)
3 1/2 in [9.0 cm] {4' case}
11 1/2 in [29.2 cm] {6' case}
15 7/16 in [39.2 cm] {8' case}
24 1/8 in [61.3 cm] {6' case}
28 1/16 in [71.3 cm] {8' case}
16 1/8 in [41.0 cm] {4' case}
16 1/2 in [41.9 cm]
6 1/16 in [15.4 cm]
12 1/16 in [30.6 cm]
33 7/16 in [85.0 cm]
25 5/8 in [65.1 cm]
ELECTRICAL 4' ONLY
38 3/16 in [97.0 cm]
46 in [116.8 cm]
1 in [2.5 cm] {END}
SLIDE OUT CONTROL BOX 6' & 8' ONLY (Slides to Rear of Case)
24 in [61.0 cm] {4' case}
36 in [91.4 cm] {6' case}
38 in [96.5 cm] {8' case}
1 1/2" PVC DRAIN CONNECTION
SLIDE OUT CONTROL BOX 4' ONLY (Slides to Rear of Case)
FRONT OF CASE
48 in [121.9 cm] {4' case}
72 in [182.9 cm] {6' case}
96 in [243.8 cm] {8' case}

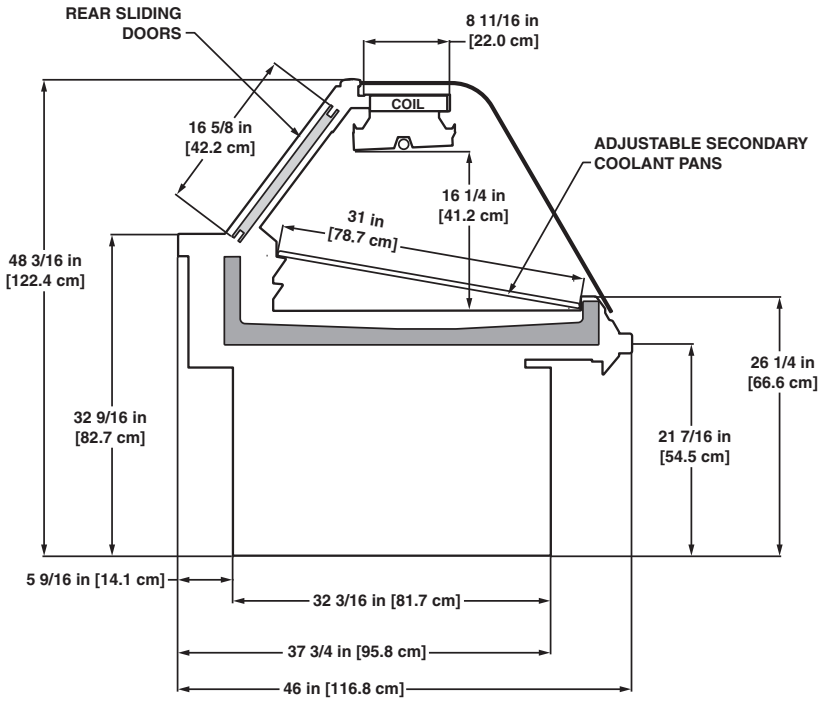
REAR SLIDING DOORS
8 11/16 in [22.0 cm]
COIL
16 5/8 in [42.2 cm]
ADJUSTABLE SECONDARY COOLANT PANS
16 1/4 in [41.2 cm]
31 in [78.7 cm]
48 3/16 in [122.4 cm]
26 1/4 in [66.6 cm]
32 9/16 in [82.7 cm]
21 7/16 in [54.5 cm]
5 9/16 in [14.1 cm]
32 3/16 in [81.7 cm]
37 3/4 in [95.8 cm]
46 in [116.8 cm]

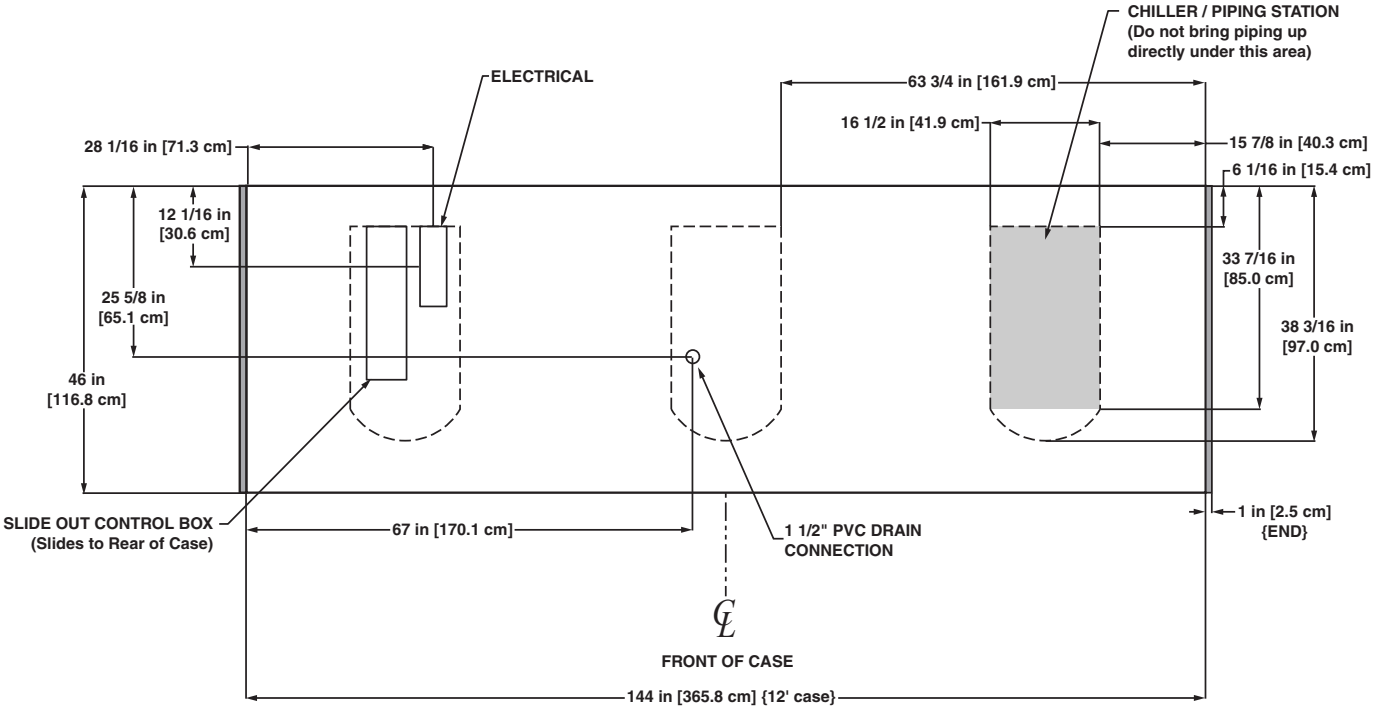
CHILLER / PIPING STATION (Do not bring piping up directly under this area)
ELECTRICAL
63 3/4 in [161.9 cm]
16 1/2 in [41.9 cm]
15 7/8 in [40.3 cm]
28 1/16 in [71.3 cm]
6 1/16 in [15.4 cm]
12 1/16 in [30.6 cm]
33 7/16 in [85.0 cm]
25 5/8 in [65.1 cm]
38 3/16 in [97.0 cm]
46 in [116.8 cm]
SLIDE OUT CONTROL BOX (Slides to Rear of Case)
67 in [170.1 cm]
1 1/2" PVC DRAIN CONNECTION
1 in [2.5 cm] {END}
FRONT OF CASE
144 in [365.8 cm] {12' case}

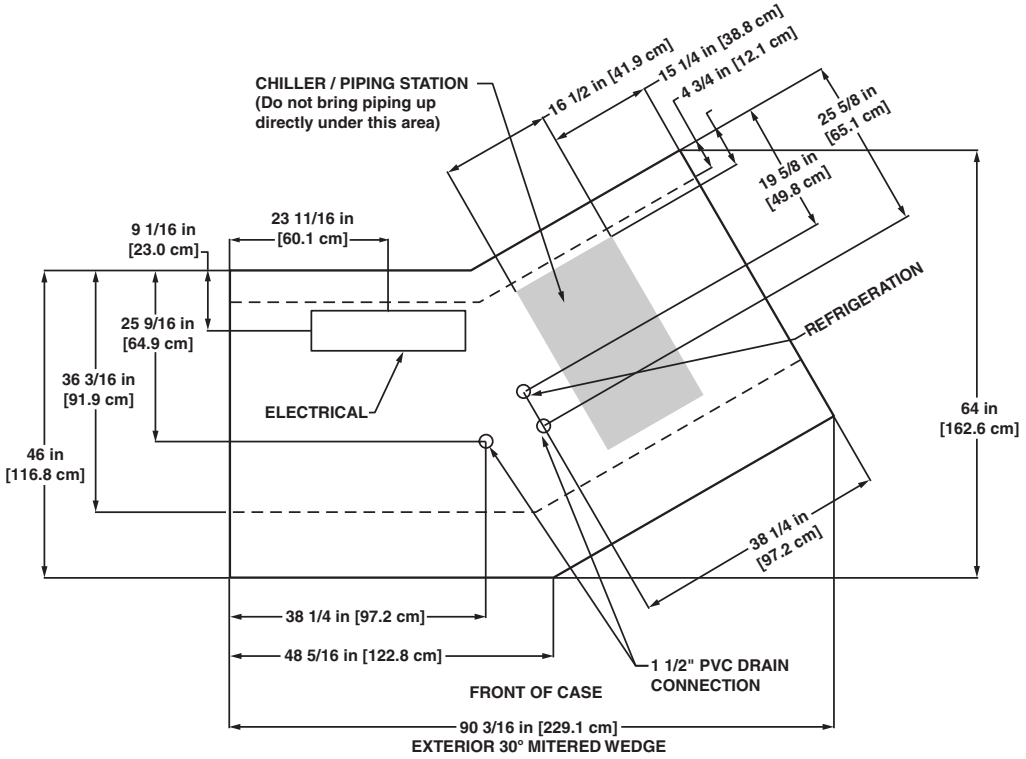
CHILLER / PIPING STATION
(Do not bring piping up
directly under this area)
16 1/2 in [41.9 cm]
15 1/4 in [38.8 cm]
4 3/4 in [12.1 cm]
25 5/8 in
[65.1 cm]
19 5/8 in
[49.8 cm]
9 1/16 in
[23.0 cm]
23 11/16 in
[60.1 cm]
25 9/16 in
[64.9 cm]
36 3/16 in
[91.9 cm]
46 in
[116.8 cm]
ELECTRICAL
REFRIGERATION
64 in
[162.6 cm]
38 1/4 in
[97.2 cm]
38 1/4 in [97.2 cm]
48 5/16 in [122.8 cm]
1 1/2" PVC DRAIN
CONNECTION
FRONT OF CASE
90 3/16 in [229.1 cm]
EXTERIOR 30° MITERED WEDGE

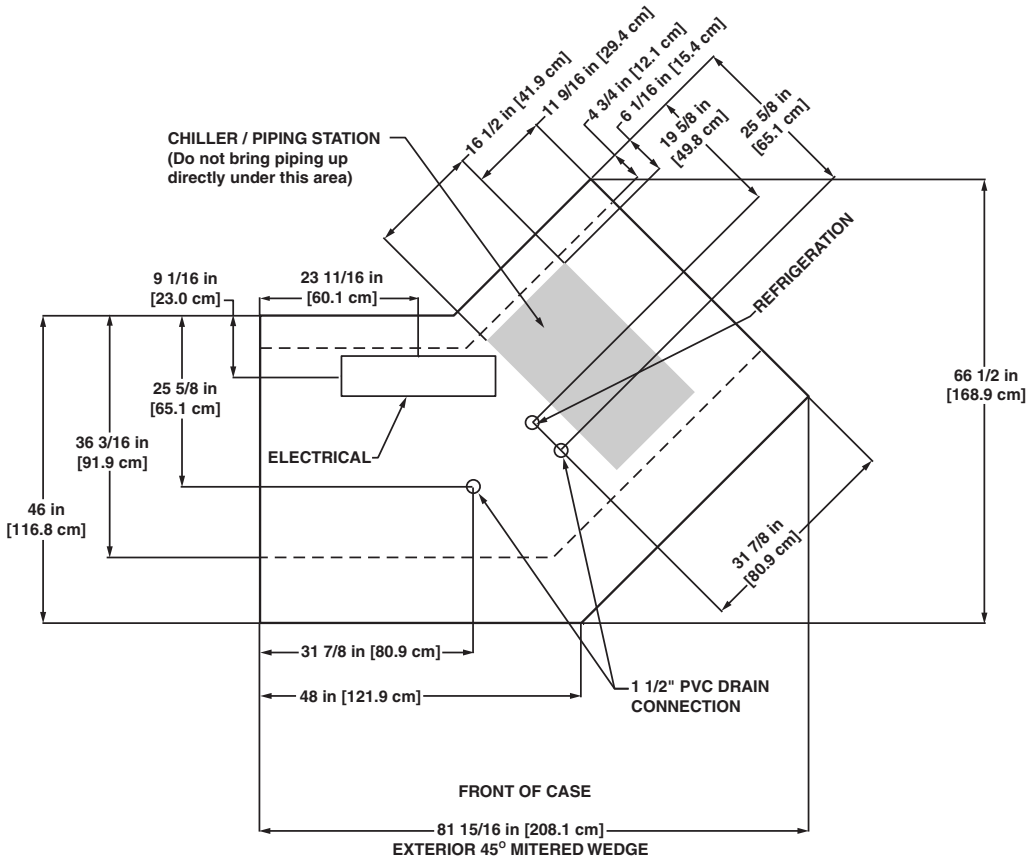
CHILLER / PIPING STATION
(Do not bring piping up
directly under this area)
16 1/2 in [41.9 cm]
11 9/16 in [29.4 cm]
4 3/4 in [12.1 cm]
6 1/16 in [15.4 cm]
19 5/8 in
[49.8 cm]
25 5/8 in
[65.1 cm]
9 1/16 in
[23.0 cm]
23 11/16 in
[60.1 cm]
25 5/8 in
[65.1 cm]
36 3/16 in
[91.9 cm]
46 in
[116.8 cm]
ELECTRICAL
REFRIGERATION
66 1/2 in
[168.9 cm]
31 7/8 in
[80.9 cm]
31 7/8 in [80.9 cm]
48 in [121.9 cm]
1 1/2" PVC DRAIN
CONNECTION
FRONT OF CASE
81 15/16 in [208.1 cm]
EXTERIOR 45° MITERED WEDGE

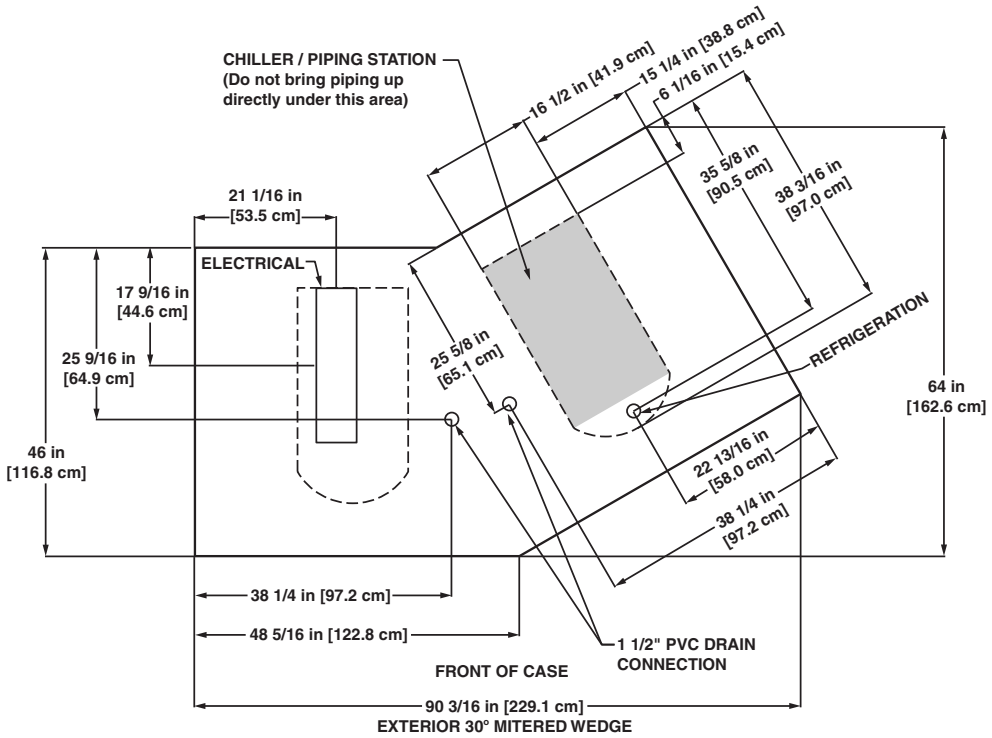

EXTERIOR 30° MITERED WEDGE

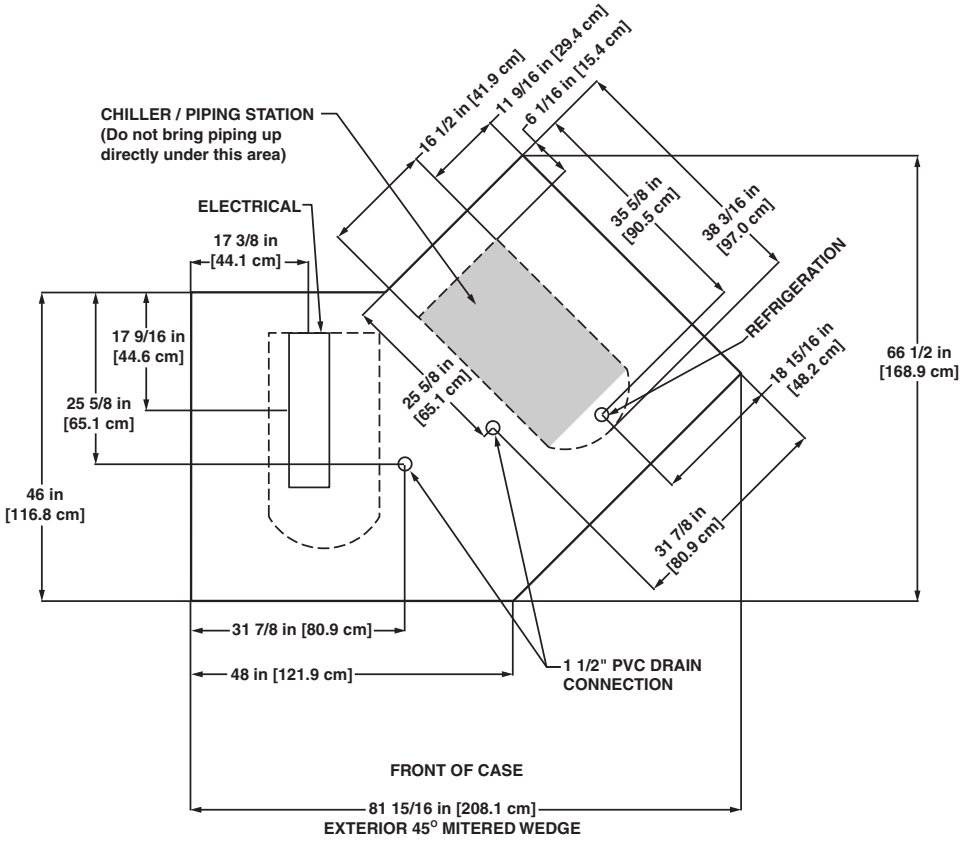

EXTERIOR 45° MITERED WEDGE

Secondary Coolant Flat Glass Gravity Coil Meat Merchandiser

PSGF - 4′, 6′, 8′, 12′ & E90

Electrical Data

Model		Secondary[1] Coolant Pump		Anti-Condensate Heaters	
		120 Volts		120 Volts	
		Amps	Watts	Amps	Watts
PSGF	4′	2.00	240	0.55	66
	6′	2.00	240	1.03	124
	8′	2.00	240	1.03	124
	12′	2.00	240	1.60	192
	E90	2.00	240	1.60	192

[1] Secondary coolant pump is only applicable for the semi-self-contained version.

Lighting Data

Model		Bulbs per Row	Bulb Length	Typical per Light Row		Maximum Lighting	
				120 Volts		120 Volts	
				Amps	Watts	Amps	Watts
PSGF	4′	1	4′	0.23	28	0.23	28
	6′	2	3′	0.37	44	0.37	44
	8′	2	4′	0.47	56	0.47	56
	12′	3	4′	0.70	84	0.70	84
	E90	3	3′	0.55	66	0.55	66

Cut in / Cut Out

	Cut Out Temp. (°F)	Cut in Temp. (°F)
Pans	29	33
Top Coil	31	36

Guidelines & Control Settings - Remote Secondary

Model	BTUH/ft	Supply Temp. (°F)	Flow Rate GPM/ft	Charge GAL/ft
PSGF	300	26	0.45	0.27

Guidelines & Control Settings - Semi-Self-Contained

Model	BTUH/ft[2]	Supply Temp. (°F)	Chiller Temp. (°F)	Flow Rate[3] GPM/ft	Charge[4] GAL/ft	Max. Working Pressure (PSIG)	Max. Static Pressure (PSIG)
PSGF[5]	350	26	20	0.45	0.27	50	70

[2] BTUHs/ft listed are for parallel operation. Conventional ratings may be approximated by multiplying listed rating by 1.04.

[3] Minimum flow rate.

[4] For semi-self-contained cases add 2.75 gallon of fluid for the chiller to the total charge.

[5] When calculating charge I45 wedges are equivalent to an 8′ case and E90 wedges are equivalent to an 12′ case.

Defrost Controls

Model	Top Coil Defrosts Per Day	Run-Off Time (min)	Electric Defrost		Timed Off Defrost		Warm Fluid Defrost		Reverse Air Defrost	
			Fail-safe (min)	Termination Temp. (°F)	Fail-safe (min)	Termination Temp. (°F)	Fail-safe (min)	Termination Temp. (°F)	Fail-safe (min)	Termination Temp. (°F)
PSGF	1	5	- - -[6]	- - -	50	45	- - -	- - -	- - -	- - -

[6] NOTE: - - - not an option on this case model.

Hill PHOENIX EXCELLENCE

NSF COMPONENT c UL us

A DOVER COMPANY

All measurements are taken per ARI 1200 - 2002 specifications.

REMOTE & SEMI-SELF-CONTAINED FLAT PANELS

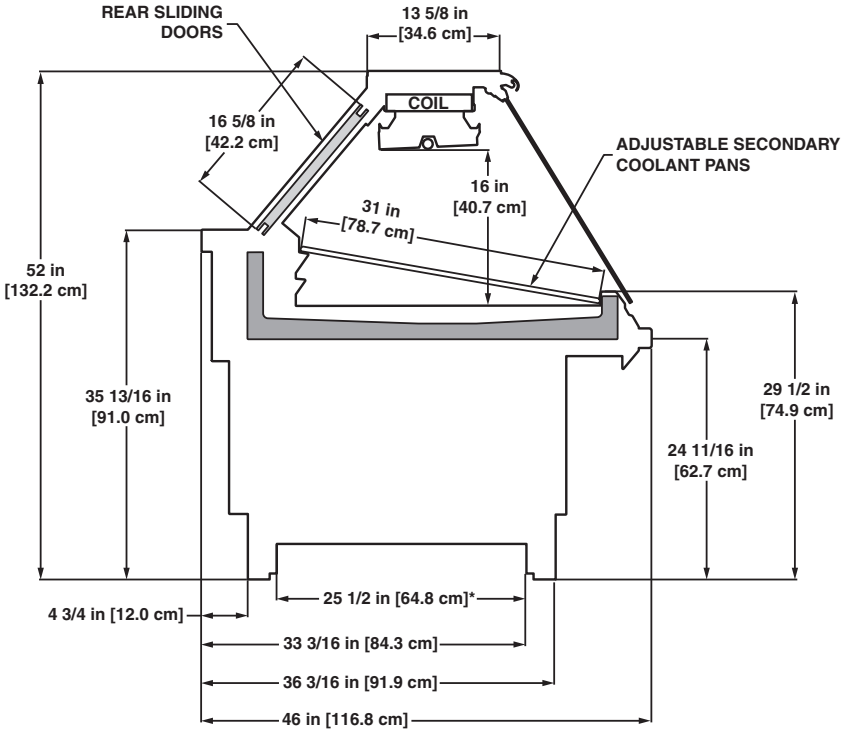

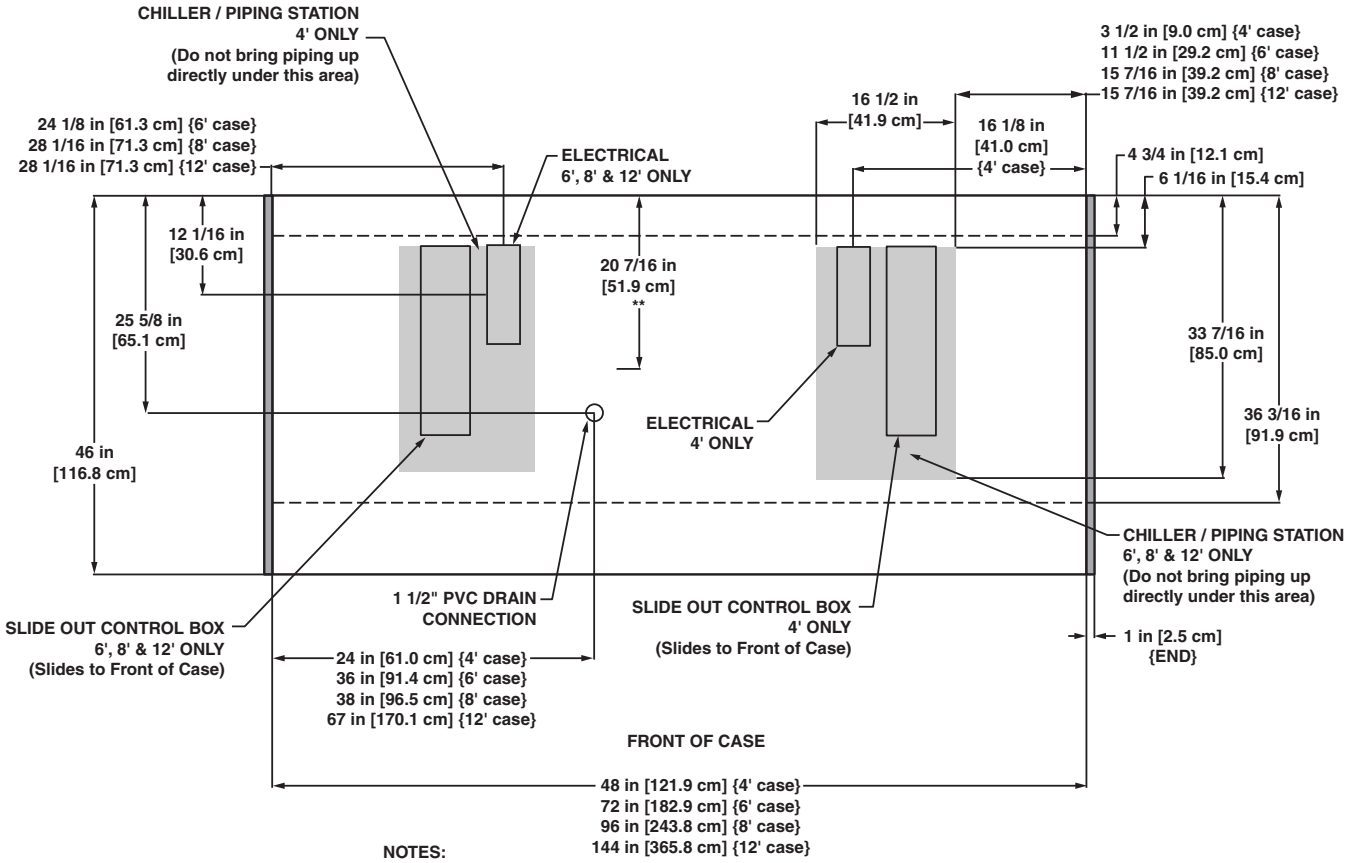

NOTES:

* STUB-UP AREA
** RECOMMENDED STUB-UP CENTERLINE FOR ELECTRICAL AND HUB DRAINS

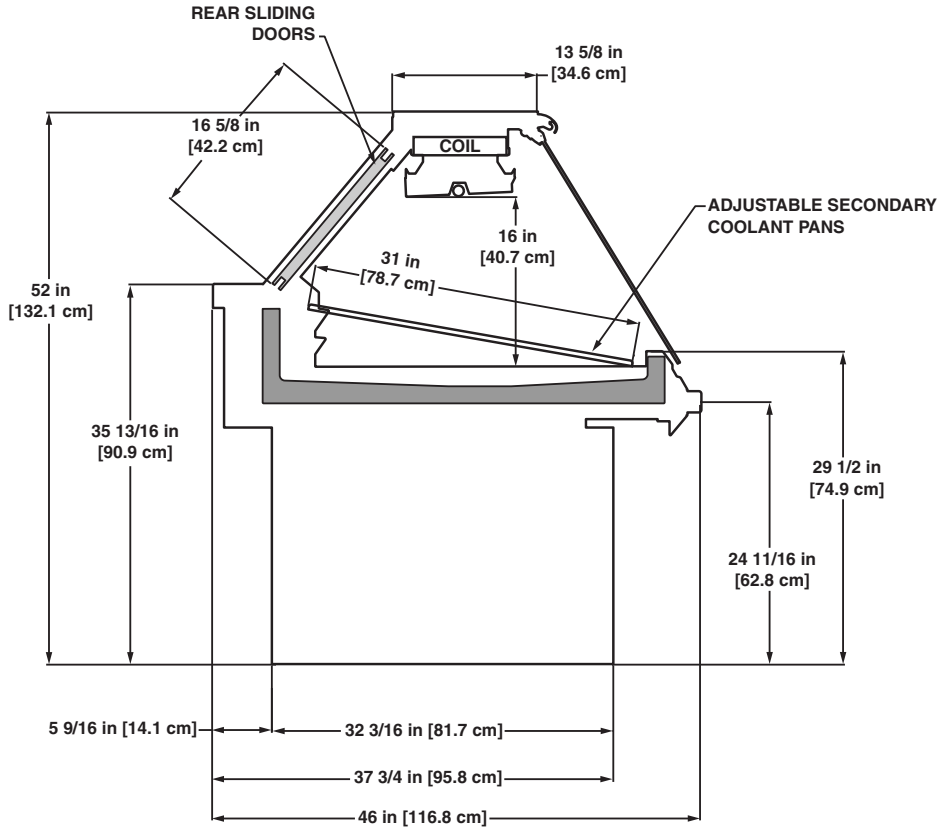

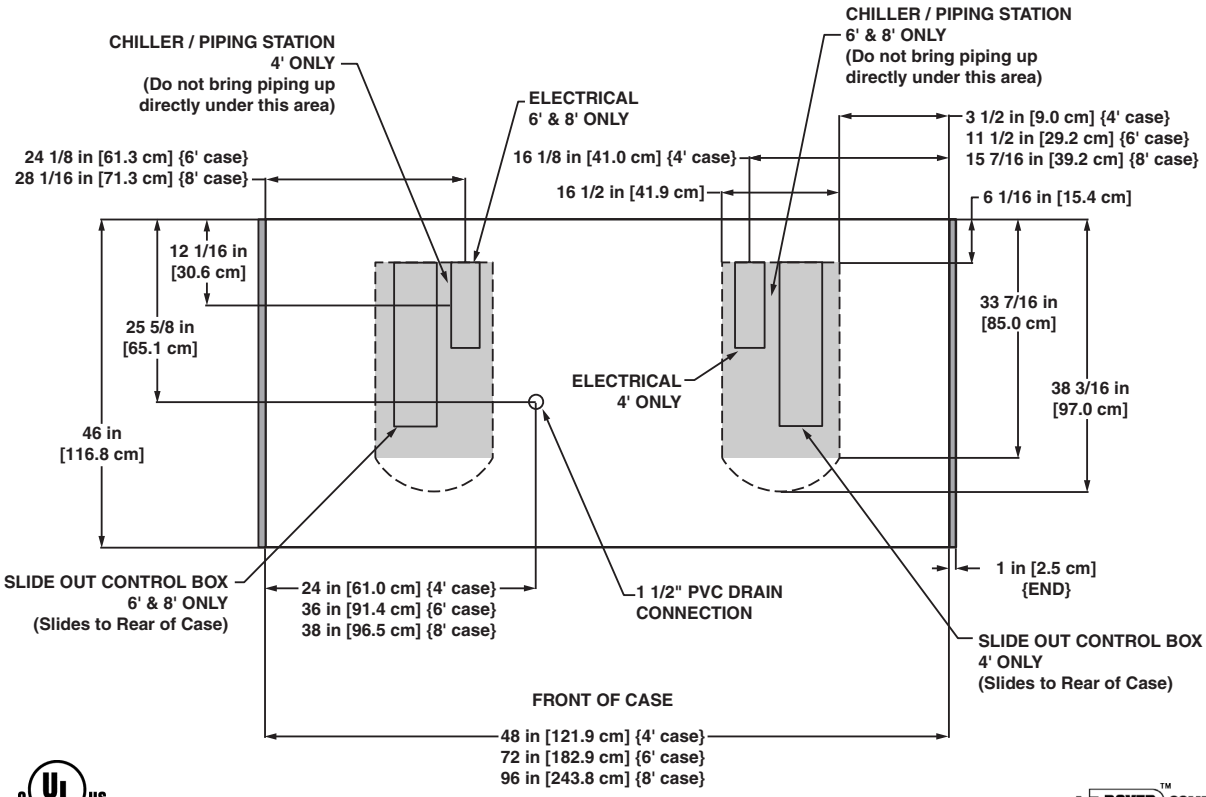

NSF COMPONENT

c UL us

A DOVER COMPANY

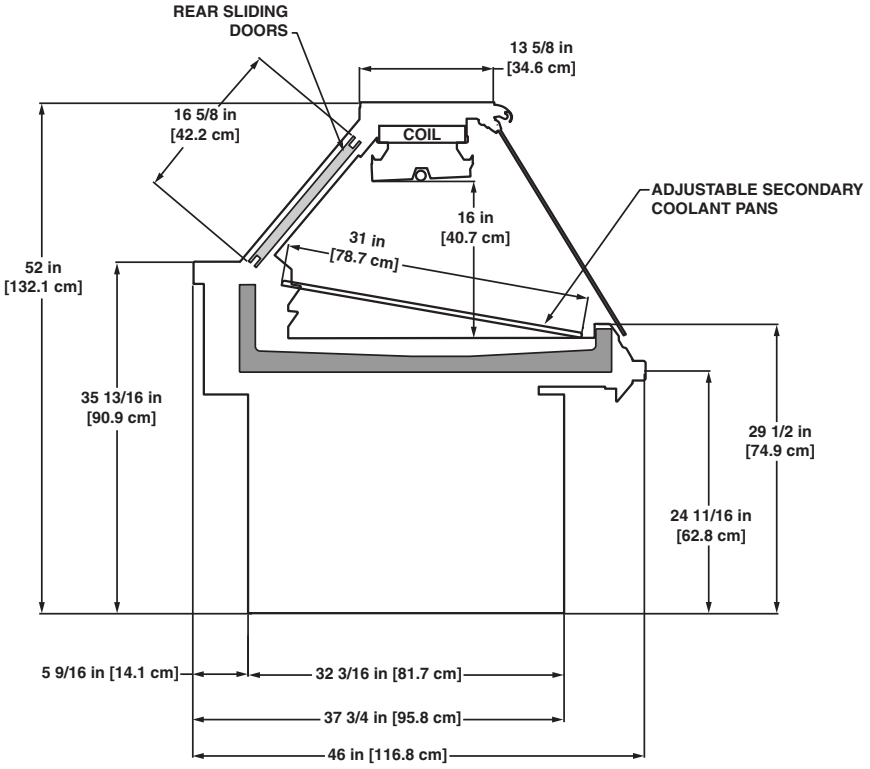
REAR SLIDING DOORS
13 5/8 in [34.6 cm]
16 5/8 in [42.2 cm]
COIL
ADJUSTABLE SECONDARY COOLANT PANS
16 in [40.7 cm]
31 in [78.7 cm]
52 in [132.1 cm]
35 13/16 in [90.9 cm]
29 1/2 in [74.9 cm]
24 11/16 in [62.8 cm]
5 9/16 in [14.1 cm]
32 3/16 in [81.7 cm]
37 3/4 in [95.8 cm]
46 in [116.8 cm]

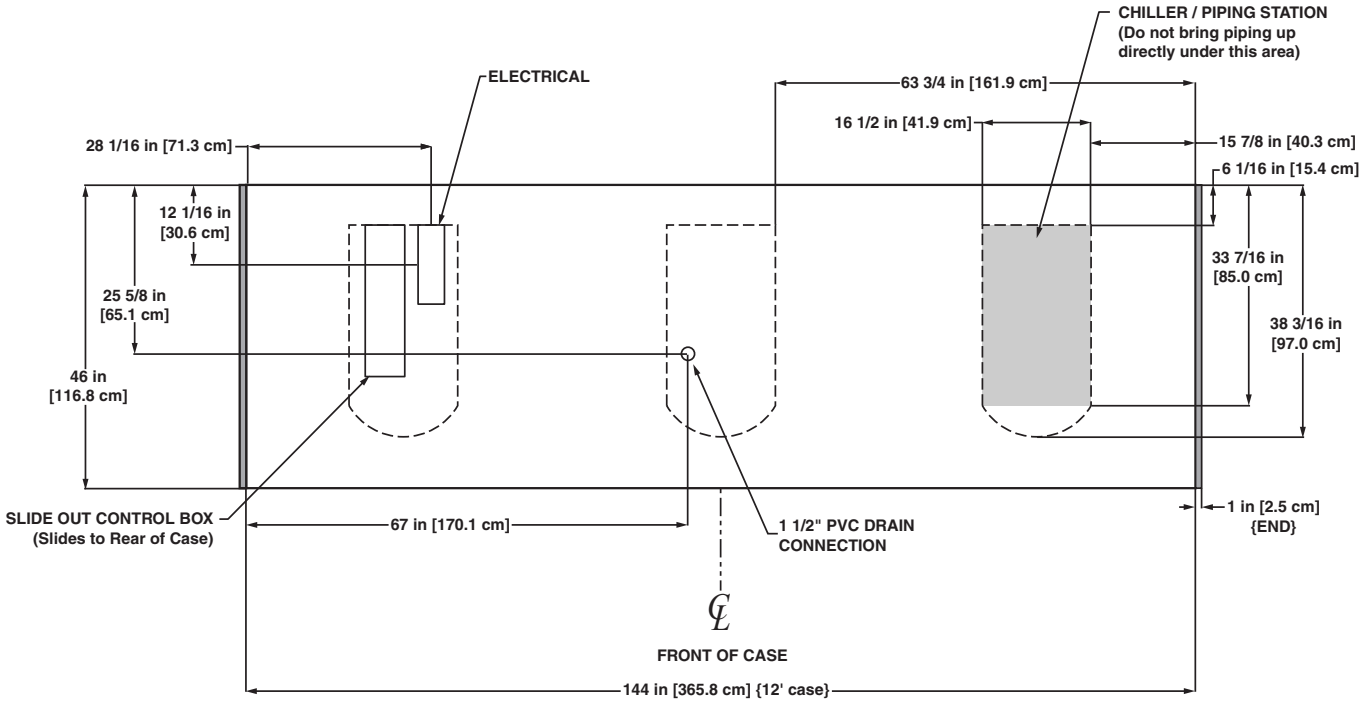
CHILLER / PIPING STATION (Do not bring piping up directly under this area)
ELECTRICAL
63 3/4 in [161.9 cm]
16 1/2 in [41.9 cm]
28 1/16 in [71.3 cm]
15 7/8 in [40.3 cm]
6 1/16 in [15.4 cm]
12 1/16 in [30.6 cm]
33 7/16 in [85.0 cm]
25 5/8 in [65.1 cm]
38 3/16 in [97.0 cm]
46 in [116.8 cm]
SLIDE OUT CONTROL BOX (Slides to Rear of Case)
67 in [170.1 cm]
1 1/2" PVC DRAIN CONNECTION
1 in [2.5 cm] {END}
FRONT OF CASE
144 in [365.8 cm] {12' case}

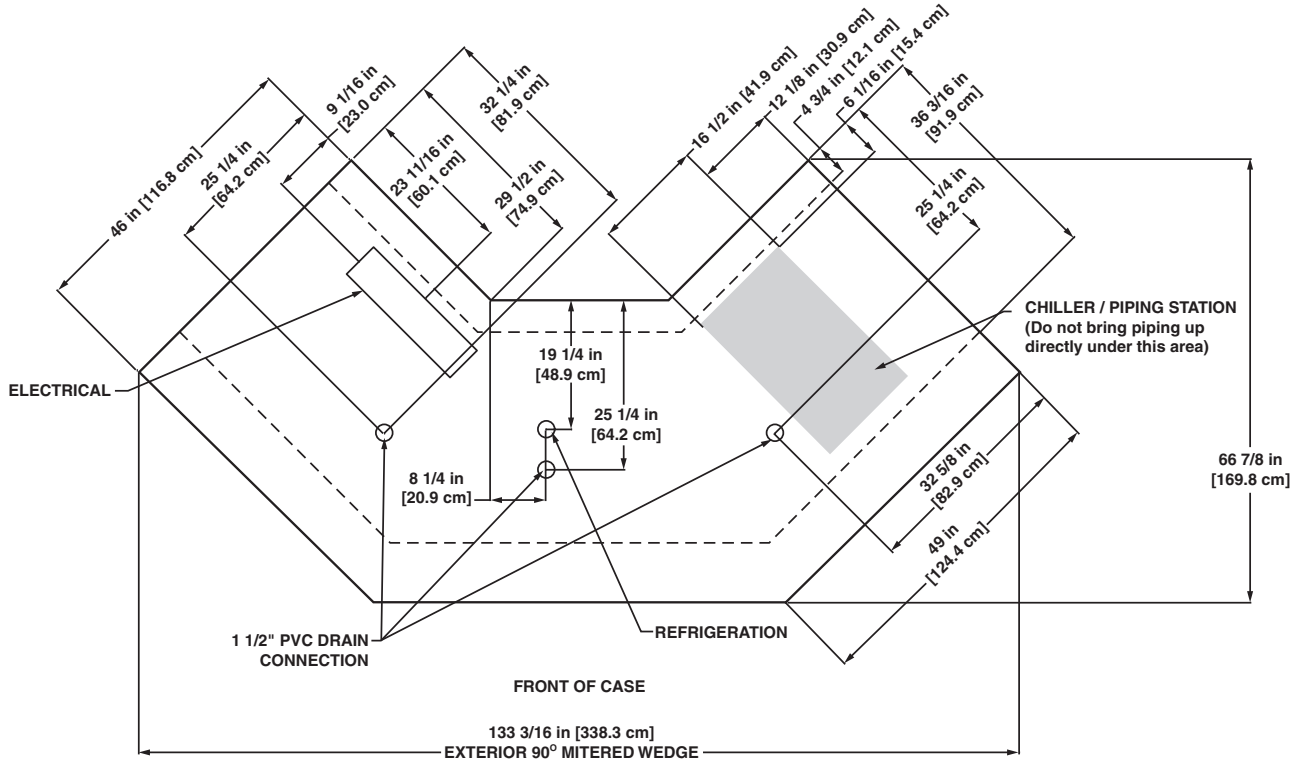
46 in [116.8 cm]
25 1/4 in [64.2 cm]
9 1/16 in [23.0 cm]
23 11/16 in [60.1 cm]
32 1/4 in [81.9 cm]
29 1/2 in [74.9 cm]
16 1/2 in [41.9 cm]
12 1/8 in [30.9 cm]
4 3/4 in [12.1 cm]
6 1/16 in [15.4 cm]
36 3/16 in [91.9 cm]
25 1/4 in [64.2 cm]
CHILLER / PIPING STATION
(Do not bring piping up directly under this area)
ELECTRICAL
19 1/4 in [48.9 cm]
25 1/4 in [64.2 cm]
8 1/4 in [20.9 cm]
32 5/8 in [82.9 cm]
49 in [124.4 cm]
66 7/8 in [169.8 cm]
1 1/2" PVC DRAIN CONNECTION
REFRIGERATION
FRONT OF CASE
133 3/16 in [338.3 cm]
EXTERIOR 90° MITERED WEDGE

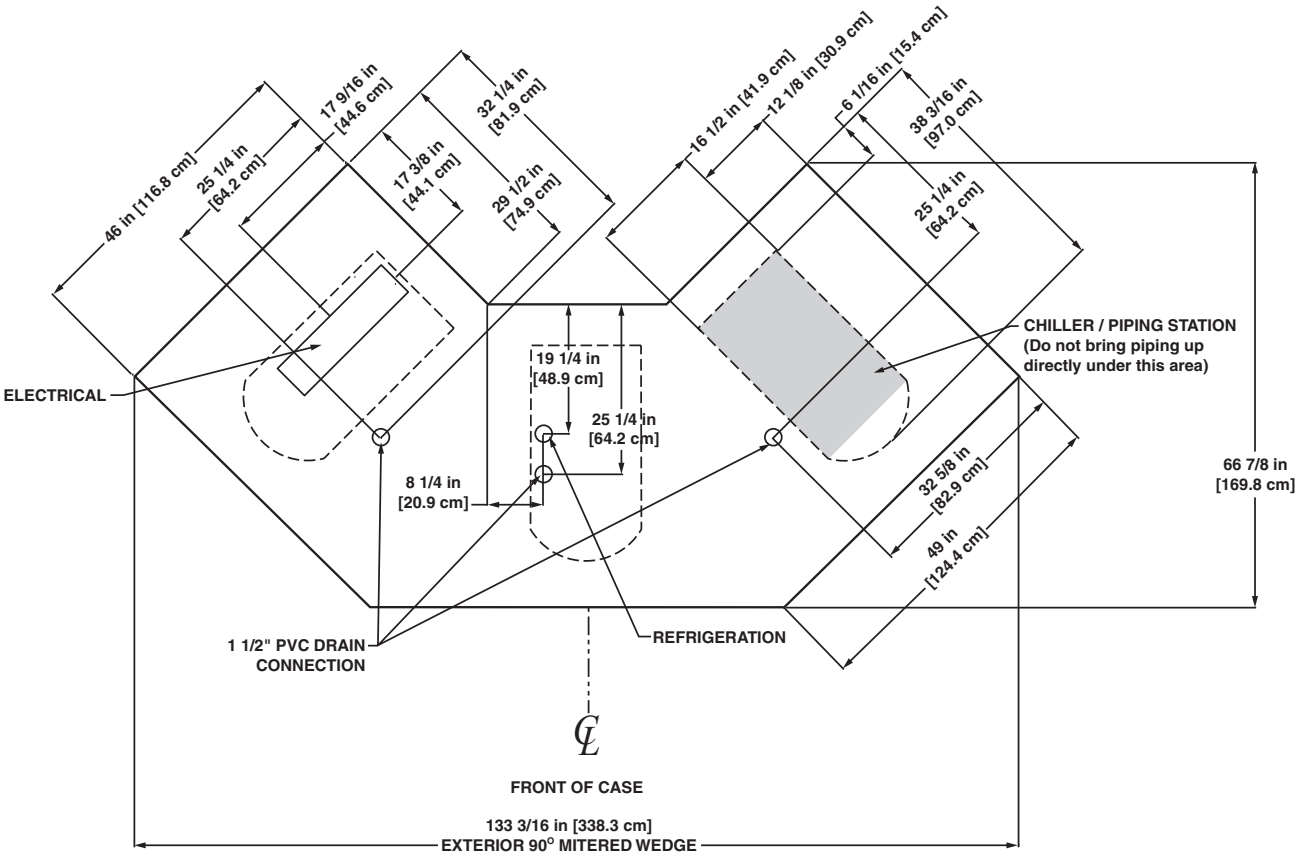
46 in [116.8 cm]
25 1/4 in [64.2 cm]
17 9/16 in [44.6 cm]
17 3/8 in [44.1 cm]
32 1/4 in [81.9 cm]
29 1/2 in [74.9 cm]
16 1/2 in [41.9 cm]
12 1/8 in [30.9 cm]
6 1/16 in [15.4 cm]
38 3/16 in [97.0 cm]
25 1/4 in [64.2 cm]
ELECTRICAL
19 1/4 in [48.9 cm]
25 1/4 in [64.2 cm]
8 1/4 in [20.9 cm]
CHILLER / PIPING STATION (Do not bring piping up directly under this area)
66 7/8 in [169.8 cm]
32 5/8 in [82.9 cm]
49 in [124.4 cm]
1 1/2" PVC DRAIN CONNECTION
REFRIGERATION
FRONT OF CASE
133 3/16 in [338.3 cm]
EXTERIOR 90° MITERED WEDGE

Secondary Coolant Flat Glass Gravity Coil Meat Merchandiser

P2SGF - 4′, 6′, 8′, 12′

Electrical Data

Model		Secondary[1] Coolant Pump		Anti-Condensate Heaters	
		120 Volts		120 Volts	
		Amps	Watts	Amps	Watts
P2SGF	4′	2.00	240	0.55	66
	6′	2.00	240	1.03	124
	8′	2.00	240	1.03	124
	12′	2.00	240	1.60	192

[1] Secondary coolant pump is only applicable for the semi-self-contained version.

Lighting Data

Model		Bulbs per Row	Bulb Length	Typical per Light Row		Maximum Lighting	
				120 Volts		120 Volts	
				Amps	Watts	Amps	Watts
P2SGF	4′	1	4′	0.23	28	0.23	28
	6′	2	3′	0.37	44	0.37	44
	8′	2	4′	0.47	56	0.47	56
	12′	3	4′	0.70	84	0.70	84

Cut in / Cut Out

	Cut Out Temp. (°F)	Cut in Temp. (°F)
Pans	29	33
Top Coil	31	36

Guidelines & Control Settings - Remote Secondary

Model	BTUH/ft	Supply Temp. (°F)	Flow Rate GPM/ft	Charge GAL/ft
P2SGF	300	26	0.45	0.27

Guidelines & Control Settings - Semi-Self-Contained

Model	BTUH/ft[2]	Supply Temp. (°F)	Chiller Temp. (°F)	Flow Rate[3] GPM/ft	Charge[4] GAL/ft	Max. Working Pressure (PSIG)	Max. Static Pressure (PSIG)
P2SGF[5]	350	26	20	0.45	0.27	50	70

[2] BTUHs/ft listed are for parallel operation. Conventional ratings may be approximated by multiplying listed rating by 1.04.

[3] Minimum flow rate.

[4] For semi-self-contained cases add 2.75 gallon of fluid for the chiller to the total charge.

[5] When calculating charge I45 wedges are equivalent to an 8′ case and E90 wedges are equivalent to an 12′ case.

Defrost Controls

Model	Top Coil Defrosts Per Day	Run-Off Time (min)	Electric Defrost		Timed Off Defrost		Warm Fluid Defrost		Reverse Air Defrost	
			Fail-safe (min)	Termination Temp. (°F)	Fail-safe (min)	Termination Temp. (°F)	Fail-safe (min)	Termination Temp. (°F)	Fail-safe (min)	Termination Temp. (°F)
P2SGF	1	5	- - -[6]	- - -	50	45	- - -	- - -	- - -	- - -

[6] NOTE: - - - not an option on this case model.

Hill PHOENIX EXCELLENCE

c UL us

A DOVER COMPANY

All measurements are taken per ARI 1200 - 2002 specifications.

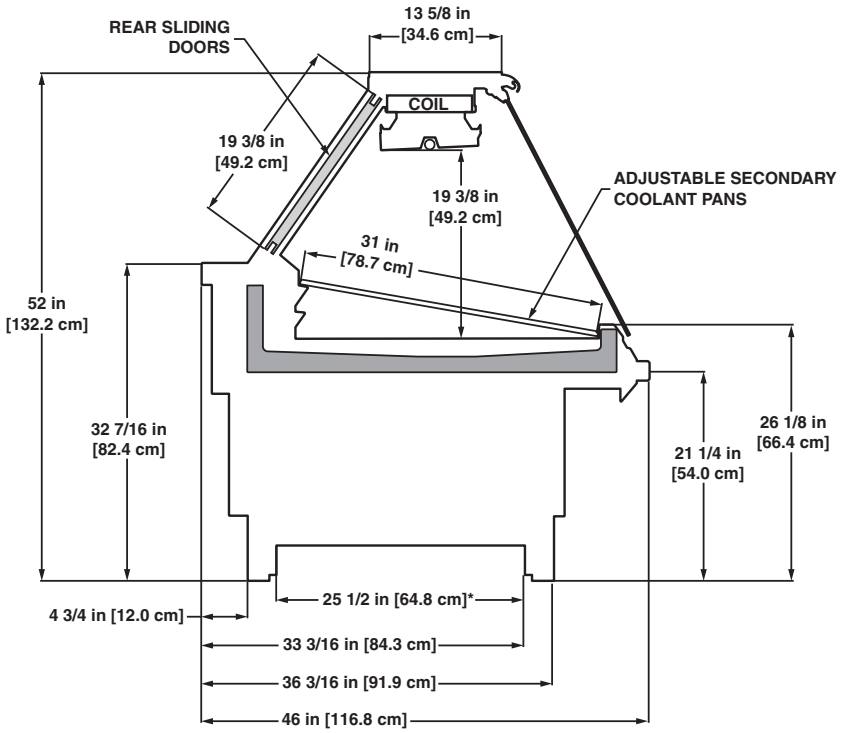

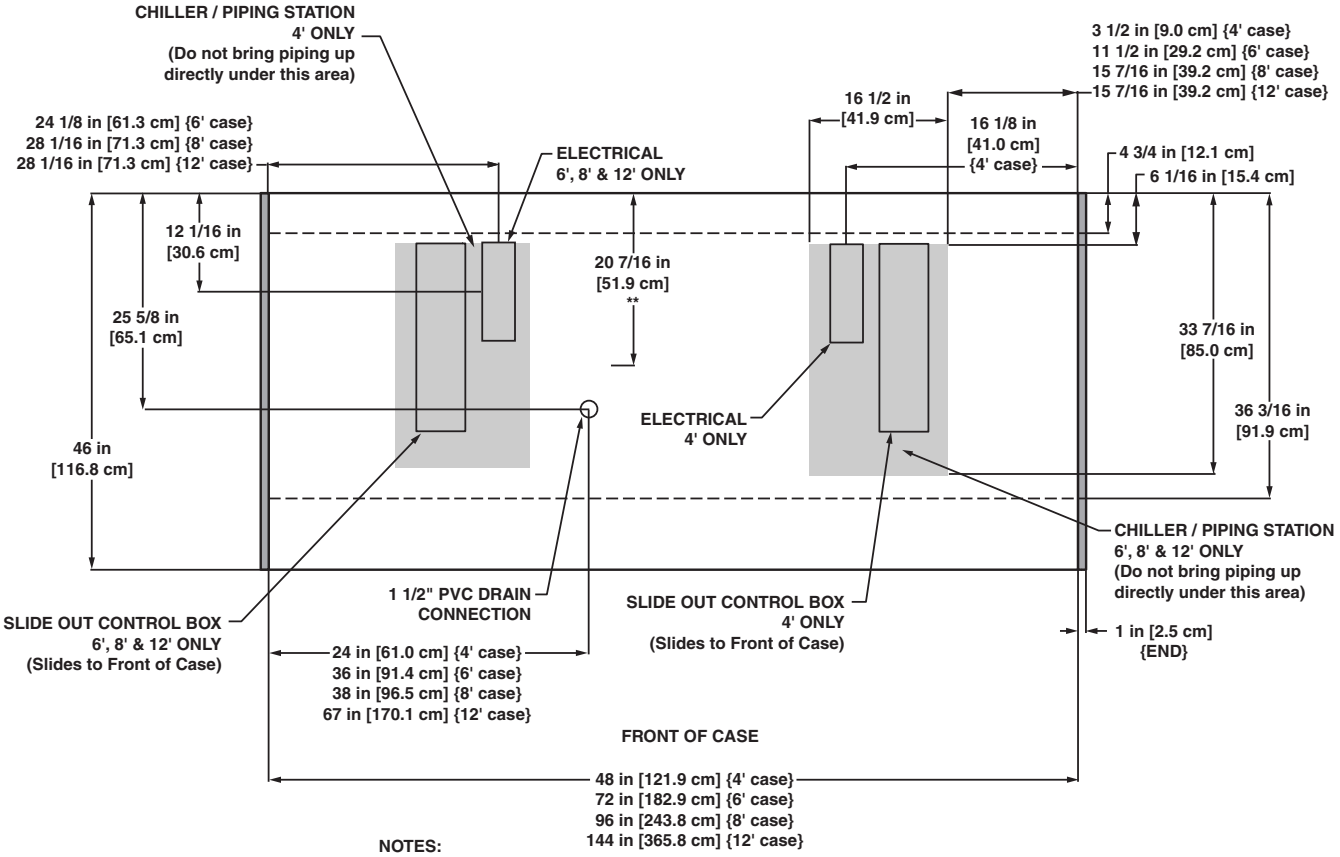

NOTES:

* STUB-UP AREA
** RECOMMENDED STUB-UP CENTERLINE FOR ELECTRICAL AND HUB DRAINS

Full Service Bakery Merchandiser

OB - 4′, 5′, 6.5′, & 8′

Electrical Data

Model		Fans per Case		Ambient Fans[1]		Standard Fans		High Efficiency Fans		Anti-Condensate Heaters		Defrost Heaters			
				120 Volts		120 Volts		120 Volts		120 Volts		208 Volts		240 Volts	
		Pri.	Amb.	Amps	Watts	Amps	Watts	Amps	Watts	Amps	Watts	Amps	Watts	Amps	Watts
OB	4′	2	2	0.30	11	0.68	34	0.30	22	1.6	192	- - -[2]	- - -	- - -	- - -
	5′	2	2	0.30	11	0.68	34	0.30	22	2.0	240	- - -	- - -	- - -	- - -
	6.5′	3	2	0.30	11	1.02	51	0.45	33	2.4	288	- - -	- - -	- - -	- - -
	8′	4	3	0.45	17	1.36	68	0.60	44	2.8	336	- - -	- - -	- - -	- - -

[1] Ambient fans are standard equipment for this case model. The primary fans can either be standard or high efficiency.

[2] NOTE: - - - not an option on this case model.

Lighting Data

Model		Typical per Light Row		Maximum Lighting	
		120 Volts		120 Volts	
		Amps	Watts	Amps	Watts
OB	4′	0.57	68	1.14	137
	5′	0.57	68	1.14	137
	6.5′	0.57	68	2.11	253
	8′	0.57	68	2.11	253

Guidelines & Control Settings

Model	BTUH/ft[3]	Evaporator (°F)	Superheat Set Point @ Bulb (°F)	Discharge Air (°F)	Return Air (°F)	Discharge Air Velocity[4] (FPM)
OB	650	27	6-8	32	39	338

[3] BTUHs/ft listed are for parallel operation. Conventional ratings may be approximated by multiplying listed rating by 1.04.

[4] Average discharge air velocity at peak of defrost.

Defrost Controls

Model			Electric Defrost		Timed Off Defrost		Hot Gas Defrost		Reverse Air Defrost	
	Defrosts Per Day	Run-Off Time (min)	Fail-safe (min)	Termination Temp. (°F)	Fail-safe (min)	Termination Temp. (°F)	Fail-safe (min)	Termination Temp. (°F)	Fail-safe (min)	Termination Temp. (°F)
OB	3	6 - 8	- - -	- - -	45	47	26	45	45	45

Medium Temperature Defrost Schedule

No. Per Day	Hours
1	12 midnight
2	12 am - 12 pm
3	6 am - 2 pm - 10 pm
4	12 - 6 am - 12 - 6 pm

All measurements are taken per ARI 1200 - 2002 specifications.

Hill PHOENIX EXCELLENCE

A DOVER COMPANY

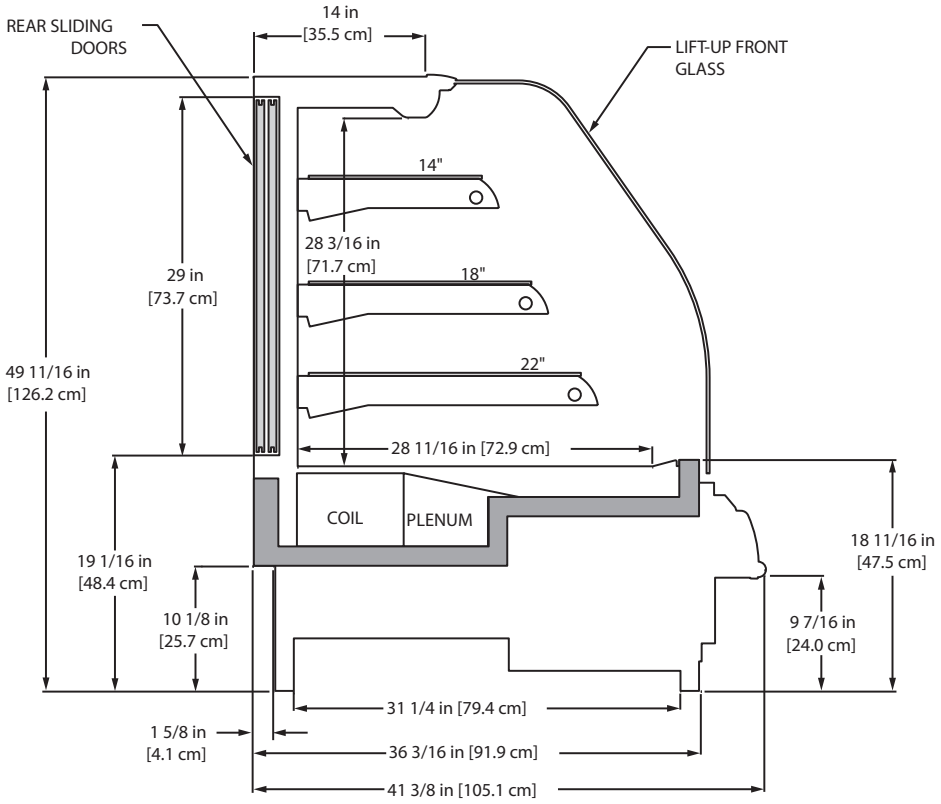
REAR SLIDING DOORS
14 in [35.5 cm]
LIFT-UP FRONT GLASS
14"
28 3/16 in [71.7 cm]
18"
29 in [73.7 cm]
22"
49 11/16 in [126.2 cm]
28 11/16 in [72.9 cm]
COIL
PLENUM
18 11/16 in [47.5 cm]
19 1/16 in [48.4 cm]
10 1/8 in [25.7 cm]
9 7/16 in [24.0 cm]
31 1/4 in [79.4 cm]
1 5/8 in [4.1 cm]
36 3/16 in [91.9 cm]
41 3/8 in [105.1 cm]

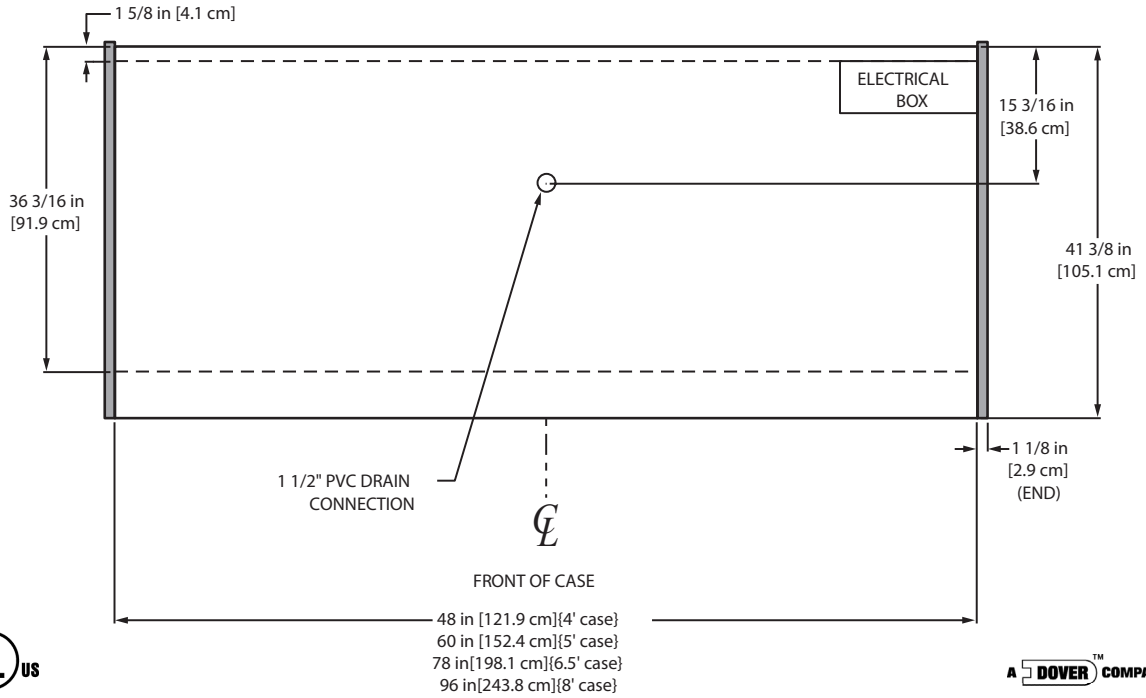
1 5/8 in [4.1 cm]
ELECTRICAL BOX
15 3/16 in [38.6 cm]
36 3/16 in [91.9 cm]
41 3/8 in [105.1 cm]
1 1/2" PVC DRAIN CONNECTION
1 1/8 in [2.9 cm] (END)
FRONT OF CASE
48 in [121.9 cm]{4' case}
60 in [152.4 cm]{5' case}
78 in[198.1 cm]{6.5' case}
96 in[243.8 cm]{8' case}

Full Service Self-Contained Bakery Merchandiser

OBA - 4′, 5′, 6.5′, & 8′

System Requirements

Model		Volts	Phase	Hz	Wire	Minimum Circuit Ampacity	Maximum Fuse Size
OBA	4′	120	1	60	2 wire + ground	12.5	20
	5′	120	1	60	2 wire + ground	12.5	20
	6.5′	120	1	60	2 wire + ground	17.8	25
	8′	220	1	60	3 wire + ground	14.8	20

Lighting Data

Model		Typical per Light Row		Maximum Lighting	
		120 Volts		120 Volts	
		Amps	Watts	Amps	Watts
OBA	4′	0.57	68	1.14	137
	5′	0.57	68	1.14	137
	6.5′	0.57	68	2.11	253
	8′	0.57	68	2.11	253

Guidelines & Control Settings

Model	24 hr Energy Usage (kWh)	Suction Pressure @ Case Outlet (psig)	Superheat Set Point @ Bulb (°F)	Discharge Air (°F)	Return Air (°F)	Discharge Air Velocity[1] (FPM)
OBA-4′		54-58	6-8	32	39	338
OBA-5′		54-58	6-8	32	39	338
OBA-6.5′		54-48	6-8	32	39	338
OBA-8′		54-58	6-8	32	39	338

[1] Average discharge air velocity at peak of defrost.

Condensing Unit Data

Model	Volts	Phase	Frequency (Hz)	HP	RLA[2] (amps)	LRA[3] (amps)	Refrig.	lbs of Refrig.
OBA-4′	120	1	60	1/4	9.3	36.0	R134A	3.1
OBA-5′	120	1	60	1/2	9.0	51.0	R134A	3.6
OBA-6.5′	120	1	60	1/2	12.9	66.3	R134A	5
OBA-8′	220	1	60	3/4	10.9	56	R134A	3.75

[2] RLA - Running Load Amps.
[3] LRA - Locked Rotor Amps.

Defrost Controls

Model		Electric Defrost		Timed Off Defrost		Hot Gas Defrost		Reverse Air Defrost	
	Defrosts Per Day	Fail-safe (min)	Termination Temp. (°F)	Fail-safe (min)	Termination Temp. (°F)	Fail-safe (min)	Termination Temp. (°F)	Fail-safe (min)	Termination Temp. (°F)
OBA	4	- - -[4]	- - -	40	49	- - -	- - -	- - -	- - -

[4] NOTE: - - - not an option on this case model.

Medium Temperature Defrost Schedule

No. Per Day	Hours
1	12 midnight
2	12 am - 12 pm
3	6 am - 2 pm - 10 pm
4	12 - 6 am - 12 - 6 pm

All measurements are taken per ARI 1200 - 2002 specifications.

Hill PHOENIX EXCELLENCE

A DOVER™ COMPANY

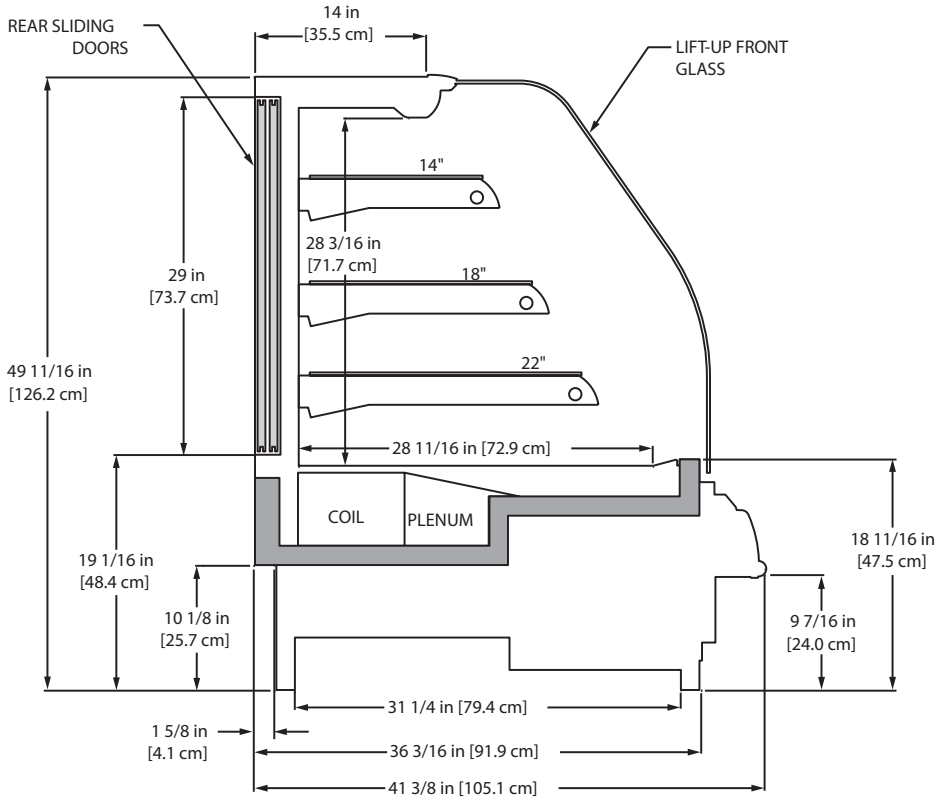

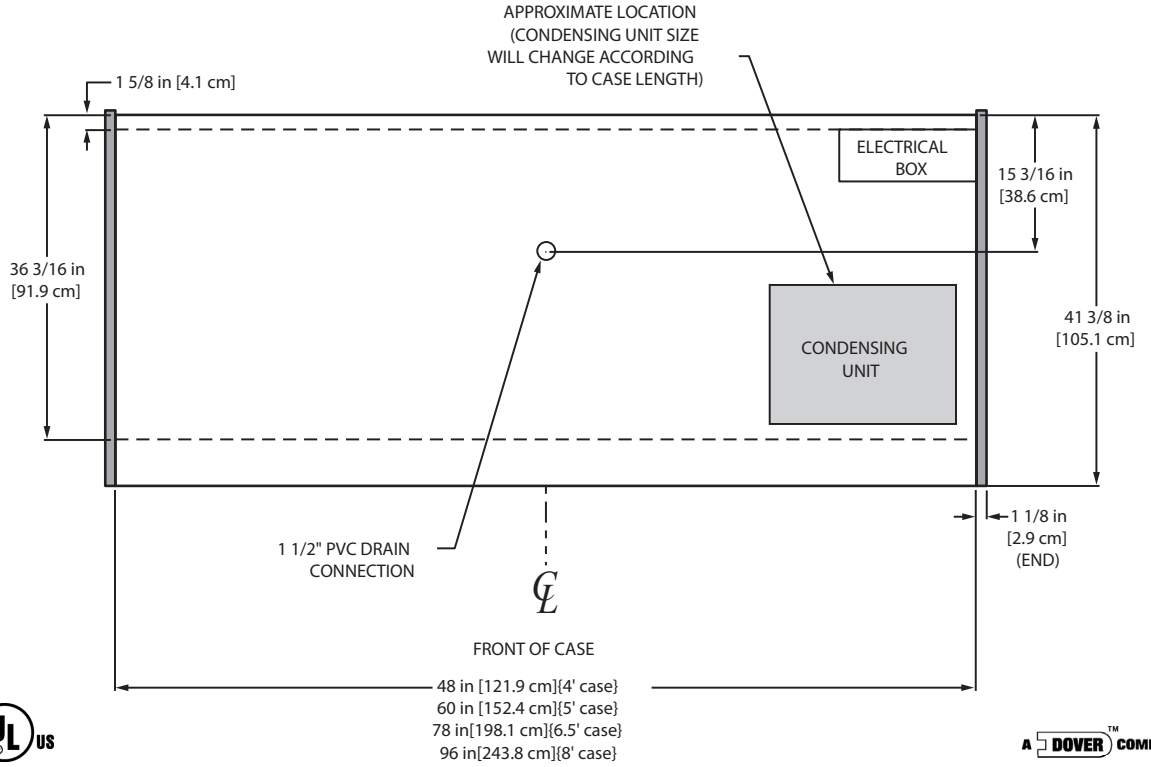

SERVICE

Bakery

Lighting Data

Model		Typical per Light Row		Maximum Lighting	
		120 Volts		120 Volts	
		Amps	Watts	Amps	Watts
OBD	4′	0.57	68	1.14	137
	5′	0.57	68	1.14	137
	6.5′	0.57	68	2.11	253
	8′	0.57	68	2.11	253

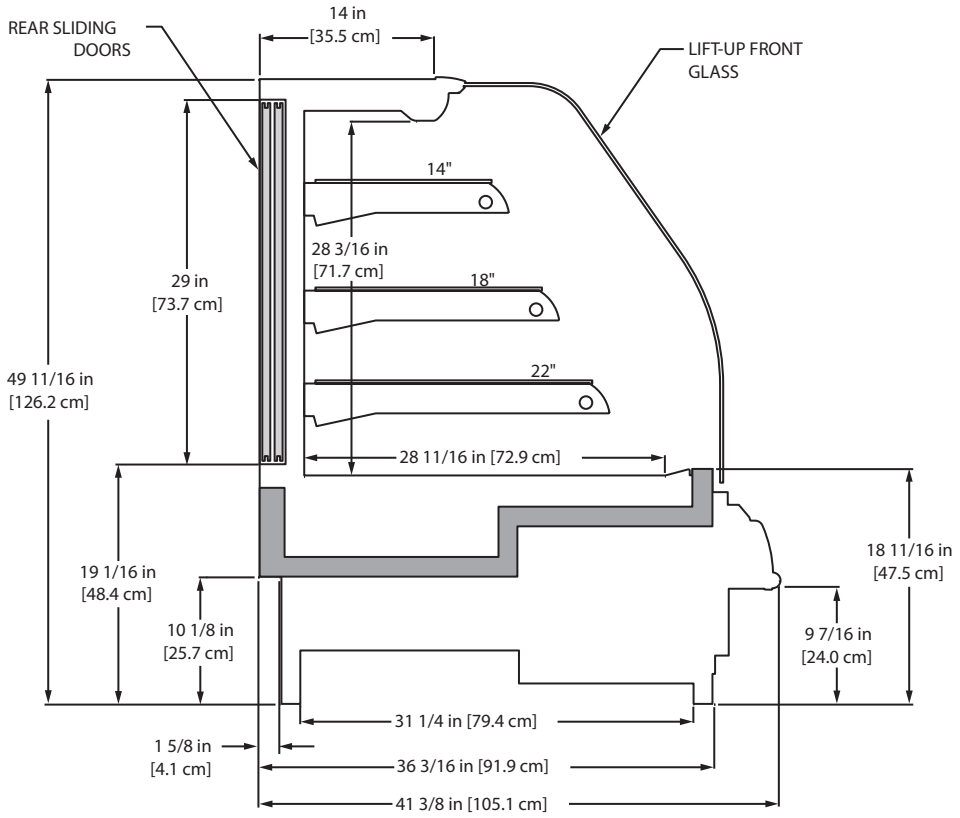
REAR SLIDING DOORS
14 in [35.5 cm]
LIFT-UP FRONT GLASS
14"
28 3/16 in [71.7 cm]
18"
29 in [73.7 cm]
22"
49 11/16 in [126.2 cm]
28 11/16 in [72.9 cm]
18 11/16 in [47.5 cm]
19 1/16 in [48.4 cm]
10 1/8 in [25.7 cm]
9 7/16 in [24.0 cm]
31 1/4 in [79.4 cm]
1 5/8 in [4.1 cm]
36 3/16 in [91.9 cm]
41 3/8 in [105.1 cm]

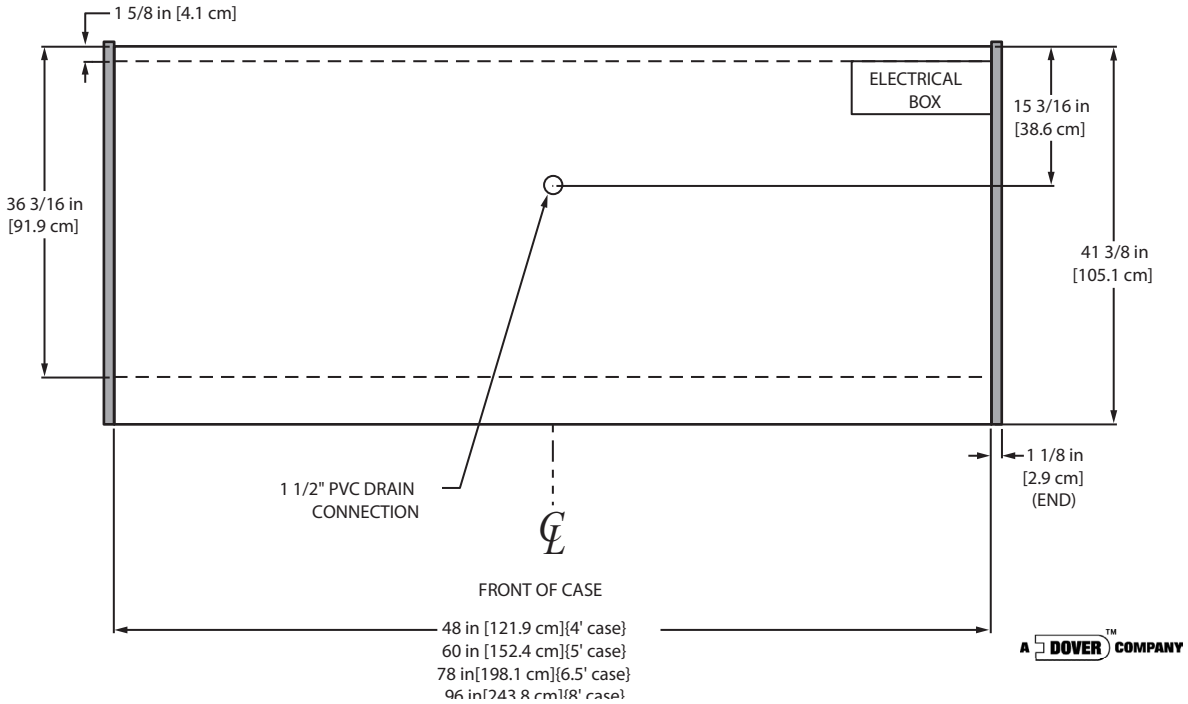
1 5/8 in [4.1 cm]
ELECTRICAL BOX
15 3/16 in [38.6 cm]
36 3/16 in [91.9 cm]
41 3/8 in [105.1 cm]
1 1/8 in [2.9 cm] (END)
1 1/2" PVC DRAIN CONNECTION
FRONT OF CASE
48 in [121.9 cm]{4' case}
60 in [152.4 cm]{5' case}
78 in[198.1 cm]{6.5' case}
96 in[243.8 cm]{8' case}

Self Service Bakery/Deli Merchandiser

OBOL - 4′, 5′, 6.5′, & 8′

Electrical Data

Model		Fans per Case	Standard Fans 120 Volts Amps	Standard Fans 120 Volts Watts	High Efficiency Fans 120 Volts Amps	High Efficiency Fans 120 Volts Watts	Anti-Condensate Heaters[1] 120 Volts Amps	Anti-Condensate Heaters[1] 120 Volts Watts	Defrost Heaters 208 Volts Amps	Defrost Heaters 208 Volts Watts	Defrost Heaters 240 Volts Amps	Defrost Heaters 240 Volts Watts
OBOL	4′	2	0.68	34	0.30	22	- - -[1]	- - -	- - -	- - -	- - -	- - -
	5′	2	0.68	34	0.30	22	- - -	- - -	- - -	- - -	- - -	- - -
	6.5′	2	0.68	34	0.30	22	- - -	- - -	- - -	- - -	- - -	- - -
	8′	3	1.02	51	0.45	33	- - -	- - -	- - -	- - -	- - -	- - -

[1] NOTE: --- not an option on this case model.

Lighting Data

Model		Typical per Light Row 120 Volts Amps	Typical per Light Row 120 Volts Watts	Maximum Lighting 120 Volts Amps	Maximum Lighting 120 Volts Watts
OBOL	4′	0.57	68	1.14	137
	5′	0.57	68	1.14	137
	6.5′	0.57	68	1.14	137
	8′	0.57	68	1.14	137

Guidelines & Control Settings

Model	BTUH/ft[2]	Evaporator (°F)	Superheat Set Point @ Bulb (°F)	Discharge Air (°F)	Return Air (°F)	Discharge Air Velocity[3] (FPM)
OBOL bakery	450	27	6-8	33	40	305
OBOL deli	450	22	6-8	30	37	305

[2] BTUHs/ft listed are for parallel operation. Conventional ratings may be approximated by multiplying listed rating by 1.04.

[3] Average discharge air velocity at peak of defrost.

Defrost Controls

Model	Defrosts Per Day	Run-Off Time (min)	Electric Defrost Fail-safe (min)	Electric Defrost Termination Temp. (°F)	Timed Off Defrost Fail-safe (min)	Timed Off Defrost Termination Temp. (°F)	Hot Gas Defrost Fail-safe (min)	Hot Gas Defrost Termination Temp. (°F)	Reverse Air Defrost Fail-safe (min)	Reverse Air Defrost Termination Temp. (°F)
OBOL	3	6 - 8	- - -	- - -	45	47	26	45	45	45

Medium Temperature Defrost Schedule

No. Per Day	Hours
1	12 midnight
2	12 am - 12 pm
3	6 am - 2 pm - 10 pm
4	12 - 6 am - 12 - 6 pm

All measurements are taken per ARI 1200 - 2002 specifications.

Hill PHOENIX EXCELLENCE

A DOVER COMPANY

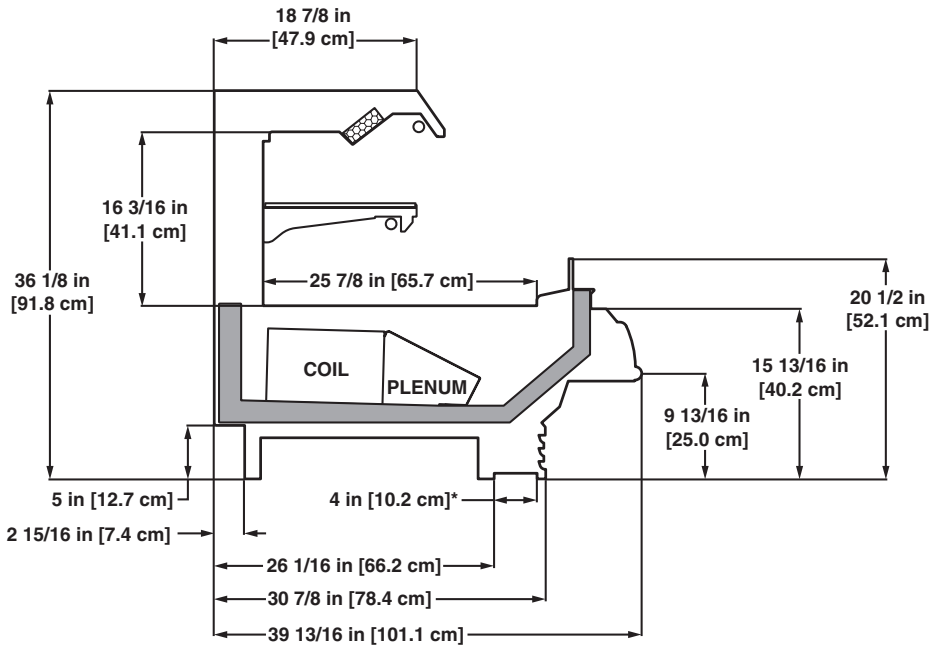

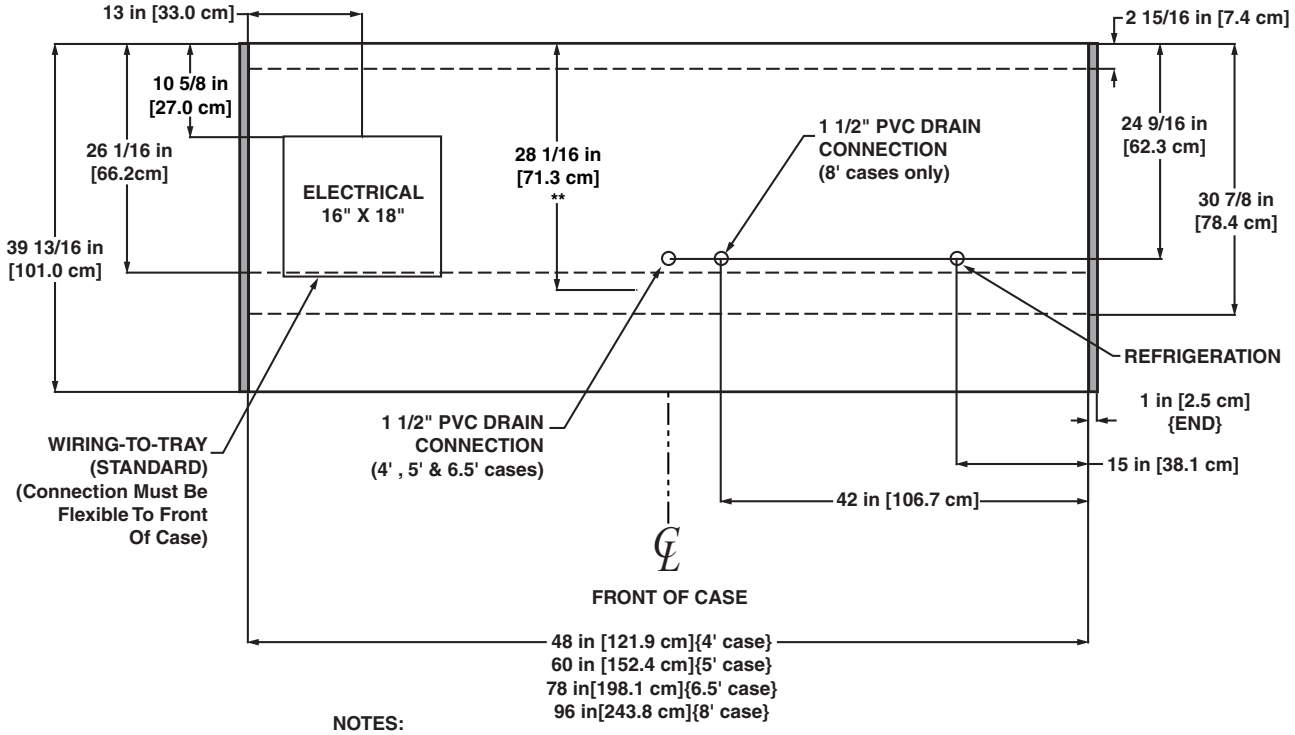

NOTES:

* STUB-UP AREA
** RECOMMENDED STUB-UP CENTERLINE FOR ELECTRICAL AND HUB DRAINS

- ENDS ADD APPROXIMATELY 1 INCH TO CASE HEIGHT
- SUCTION LINE - 7/8", LIQUID LINE - 1/2"
- AVAILABLE SHELF SIZES: 12" & 14"
- MAXIMUM OF 1 SHELF PER CASE

Self Service Bakery/Deli Merchandiser

OBO - 4′, 5′, 6.5′, & 8′

Electrical Data

Model		Fans per Case	Standard Fans 120 Volts Amps	Standard Fans 120 Volts Watts	High Efficiency Fans 120 Volts Amps	High Efficiency Fans 120 Volts Watts	Anti-Condensate Heaters[1] 120 Volts Amps	Anti-Condensate Heaters[1] 120 Volts Watts	Defrost Heaters 208 Volts Amps	Defrost Heaters 208 Volts Watts	Defrost Heaters 240 Volts Amps	Defrost Heaters 240 Volts Watts
OBO	4′	2	0.68	34	0.30	22	---[1]	---	---	---	---	---
	5′	2	0.68	34	0.30	22	---	---	---	---	---	---
	6.5′	2	0.68	34	0.30	22	---	---	---	---	---	---
	8′	3	1.02	51	0.45	33	---	---	---	---	---	---

[1] NOTE: --- not an option on this case model.

Lighting Data

Model		Typical per Light Row 120 Volts Amps	Typical per Light Row 120 Volts Watts	Maximum Lighting 120 Volts Amps	Maximum Lighting 120 Volts Watts
OBO	4′	0.57	68	1.14	137
	5′	0.57	68	1.14	137
	6.5′	0.57	68	2.11	253
	8′	0.57	68	2.11	253

Guidelines & Control Settings

Model	BTUH/ft[1]	Evaporator (°F)	Superheat Set Point @ Bulb (°F)	Discharge Air (°F)	Return Air (°F)	Discharge Air Velocity[2] (FPM)
OBO	1150	22	6-8	34	41	305

[1] BTUHs/ft listed are for parallel operation. Conventional ratings may be approximated by multiplying listed rating by 1.04.

[2] Average discharge air velocity at peak of defrost.

Defrost Controls

Model	Defrosts Per Day	Run-Off Time (min)	Electric Defrost Fail-safe (min)	Electric Defrost Termination Temp. (°F)	Timed Off Defrost Fail-safe (min)	Timed Off Defrost Termination Temp. (°F)	Hot Gas Defrost Fail-safe (min)	Hot Gas Defrost Termination Temp. (°F)	Reverse Air Defrost Fail-safe (min)	Reverse Air Defrost Termination Temp. (°F)
OBO	3	6 - 8	---	---	45	47	26	45	45	45

Medium Temperature Defrost Schedule

No. Per Day	Hours
1	12 midnight
2	12 am - 12 pm
3	6 am - 2 pm - 10 pm
4	12 - 6 am - 12 - 6 pm

All measurements are taken per ARI 1200 - 2002 specifications.

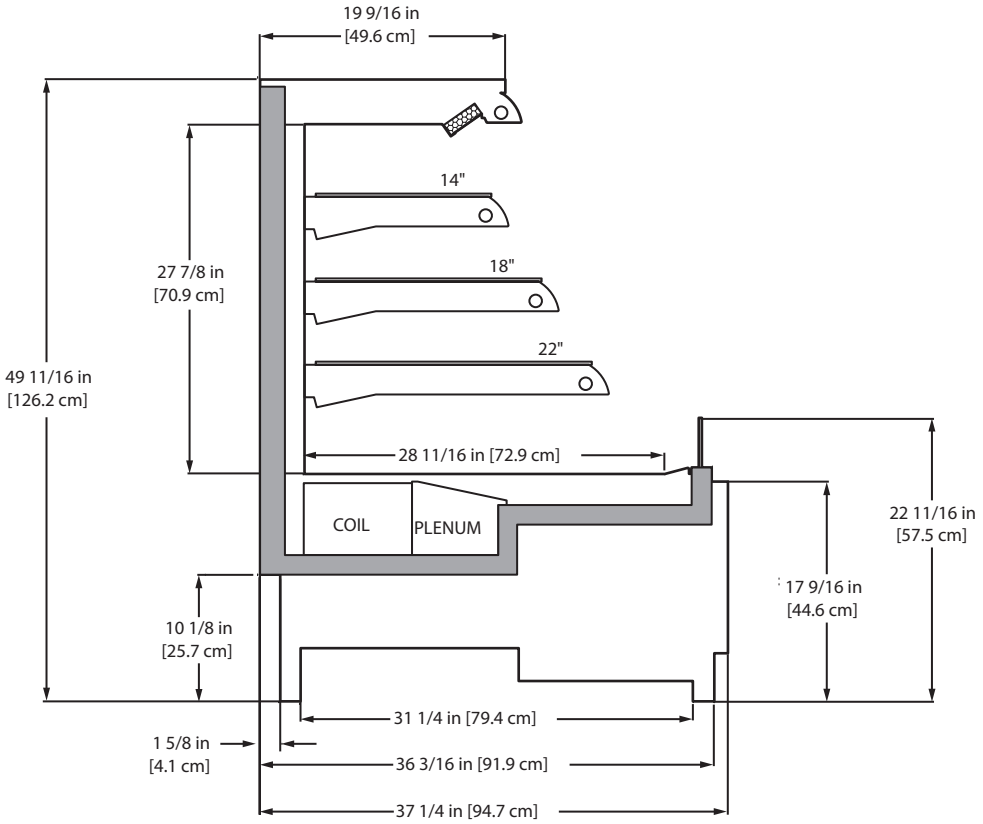

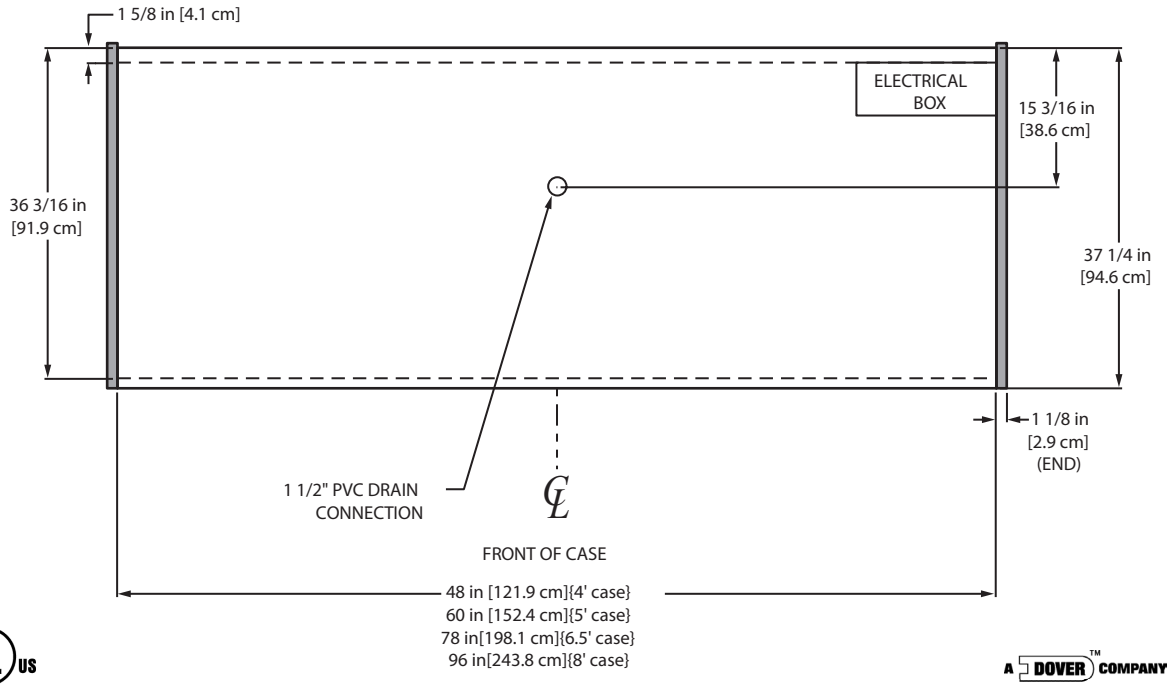

SERVICE

Bakery/Deli

Self Service Self-Contained Bakery/Deli Merchandiser

OBOA - 4′

System Requirements

Model		Volts	Phase	Hz	Wire	Minimum Circuit Ampacity	Maximum Fuse Size
OBOA	4′	120	1	60	2 wire + ground	15.5	20

Lighting Data

Model		Typical per Light Row		Maximum Lighting	
		120 Volts		120 Volts	
		Amps	Watts	Amps	Watts
OBOA	4′	0.57	68	1.14	137

Guidelines & Control Settings

Model	24 hr Energy Usage (kWh)	Suction Pressure @ Case Outlet (psig)	Superheat Set Point @ Bulb (°F)	Discharge Air (°F)	Return Air (°F)	Discharge Air Velocity[1] (FPM)
OBOA-4′	26.5	54-48	6-8	29-30	40-42	210-240

[1] Average discharge air velocity at peak of defrost.

Condensing Unit Data

Model	Volts	Phase	Frequency (Hz)	HP	RLA[2] (amps)	LRA[3] (amps)	Refrig.	lbs of Refrig.
OBOA-4′	120	1	60	1/4	7.6	35.5	R134A	3.0

[2] RLA - Running Load Amps.
[3] LRA - Locked Rotor Amps.

Defrost Controls

Model	Defrosts Per Day	Electric Defrost		Timed Off Defrost		Hot Gas Defrost		Reverse Air Defrost	
		Fail-safe (min)	Termination Temp. (°F)	Fail-safe (min)	Termination Temp. (°F)	Fail-safe (min)	Termination Temp. (°F)	Fail-safe (min)	Termination Temp. (°F)
OBOA	4	- - -[4]	- - -	40	49	- - -	- - -	- - -	- - -

[4] NOTE: - - - not an option on this case model.

Medium Temperature Defrost Schedule

No. Per Day	Hours
1	12 midnight
2	12 am - 12 pm
3	6 am - 2 pm - 10 pm
4	12 - 6 am - 12 - 6 pm

HILL PHOENIX EXCELLENCE

A DOVER COMPANY

All measurements are taken per ARI 1200 - 2002 specifications.

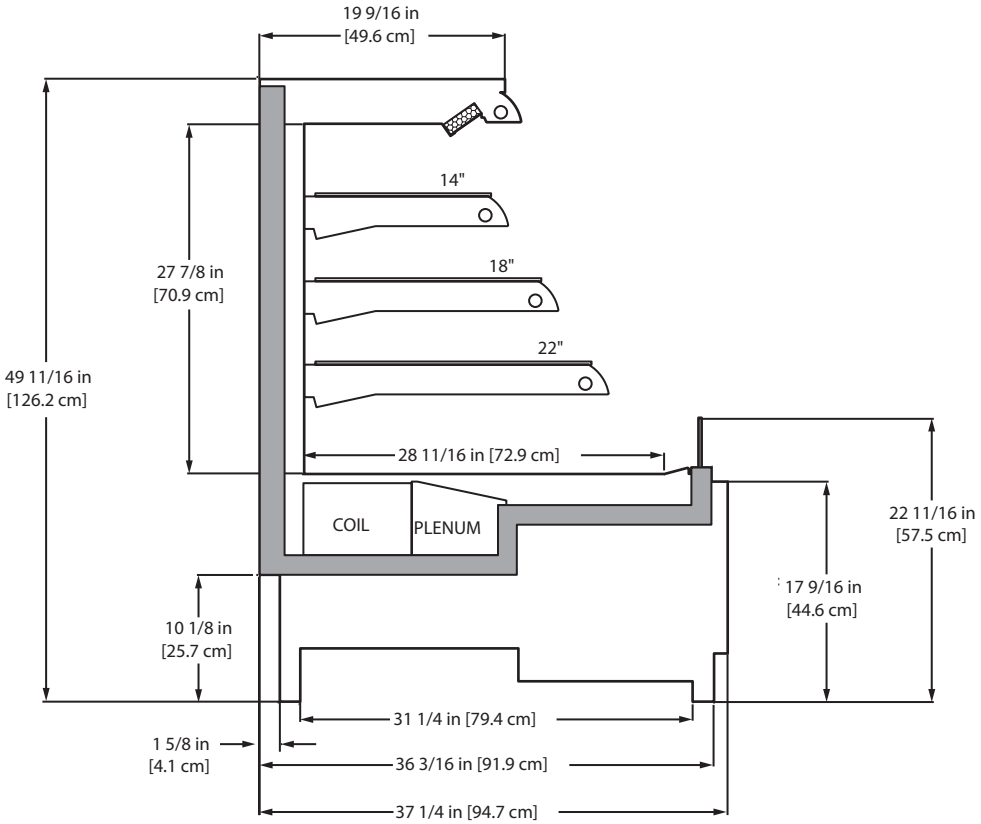

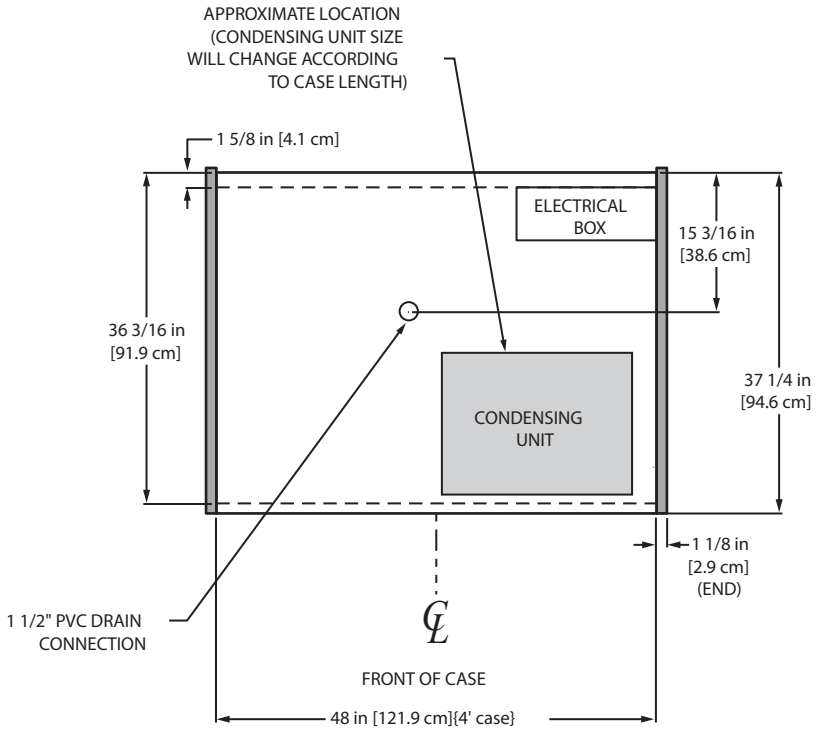

SERVICE

Bakery/Deli

Full Service Flat Glass Bakery Merchandiser

OBIF - 4′, 5′ & 6.5′

Electrical Data

Model		Fans per Case	Standard Fans 120 Volts Amps	Standard Fans 120 Volts Watts	High Efficiency Fans 120 Volts Amps	High Efficiency Fans 120 Volts Watts	Anti-Condensate Heaters 120 Volts Amps	Anti-Condensate Heaters 120 Volts Watts	Defrost Heaters 208 Volts Amps	Defrost Heaters 208 Volts Watts	Defrost Heaters 240 Volts Amps	Defrost Heaters 240 Volts Watts
OBIF	4′	2	0.68	34	0.30	22	- - -[1]	- - -	- - -	- - -	- - -	- - -
	5′	2	0.68	34	0.30	22	- - -	- - -	- - -	- - -	- - -	- - -
	6.5′	3	1.02	51	0.45	33	- - -	- - -	- - -	- - -	- - -	- - -

[1] NOTE: - - - not an option on this case model.

Lighting Data

Model		Typical per Light Row 120 Volts Amps	Typical per Light Row 120 Volts Watts	Maximum Lighting 120 Volts Amps	Maximum Lighting 120 Volts Watts
OBIF	4′	0.57	68	1.14	137
	5′	0.57	68	1.14	137
	6.5′	0.57	68	2.11	253

Guidelines & Control Settings

Model	BTUH/ft[2]	Evaporator (°F)	Superheat Set Point @ Bulb (°F)	Discharge Air (°F)	Return Air (°F)	Discharge Air Velocity[3] (FPM)
OBIF	650	27	6-8	29-30	40-42	210-240

[2] BTUHs/ft listed are for parallel operation. Conventional ratings may be approximated by multiplying listed rating by 1.04.

[3] Average discharge air velocity at peak of defrost.

Defrost Controls

Model	Defrosts Per Day	Electric Defrost Fail-safe (min)	Electric Defrost Termination Temp. (°F)	Timed Off Defrost Fail-safe (min)	Timed Off Defrost Termination Temp. (°F)	Hot Gas Defrost Fail-safe (min)	Hot Gas Defrost Termination Temp. (°F)	Reverse Air Defrost Fail-safe (min)	Reverse Air Defrost Termination Temp. (°F)
OBIF	4	- - -	- - -	40	49	- - -	- - -	- - -	- - -

Medium Temperature Defrost Schedule

No. Per Day	Hours
1	12 midnight
2	12 am - 12 pm
3	6 am - 2 pm - 10 pm
4	12 - 6 am - 12 - 6 pm

All measurements are taken per ARI 1200 - 2002 specifications.

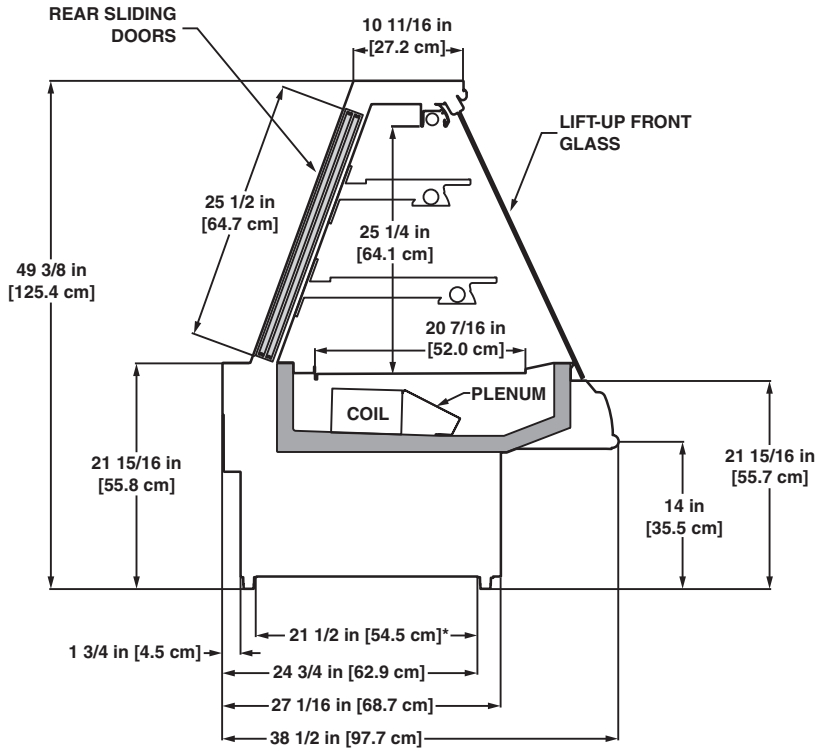

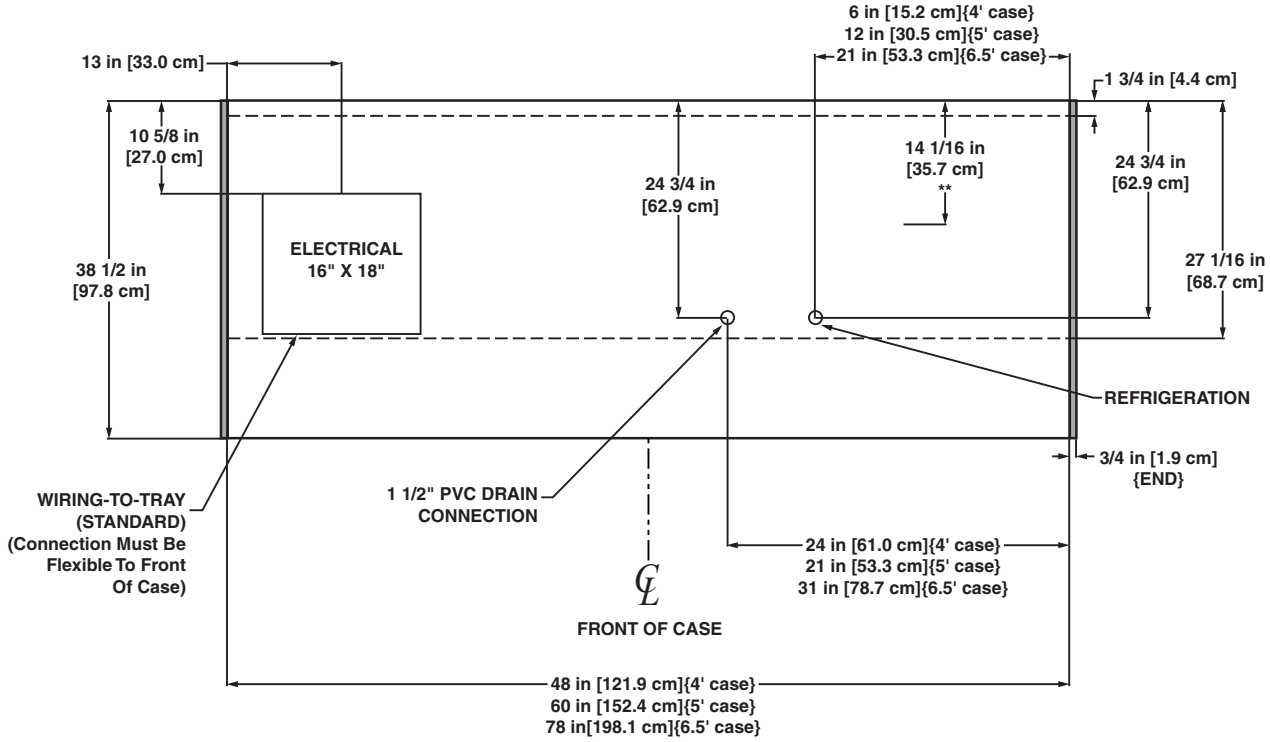

NOTES:

* STUB-UP AREA
** RECOMMENDED STUB-UP CENTERLINE FOR ELECTRICAL AND HUB DRAINS

- ENDS ADD APPROXIMATELY 1 INCH TO CASE HEIGHT
- SUCTION LINE - 7/8", LIQUID LINE - 1/2"
- AVAILABLE SHELF SIZES: 10" & 16"

Full Service Flat Glass Self-Contained Bakery Merchandiser

OBIFA - 4′ & 6.5′

System Requirements

Model		Volts	Phase	Hz	Wire	Minimum Circuit Ampacity	Maximum Fuse Size
OBIFA	4′	120	1	60	2 wire + ground	15.5	20
	6.5′	120	1	60	2 wire + ground	20.1	25

Lighting Data

Model		Typical per Light Row		Maximum Lighting	
		120 Volts		120 Volts	
		Amps	Watts	Amps	Watts
OBIFA	4′	0.57	68	1.14	137
	6.5′	0.57	68	2.11	253

Guidelines & Control Settings

Model	24 hr Energy Usage (kWh)	Suction Pressure @ Case Outlet (psig)	Superheat Set Point @ Bulb (°F)	Discharge Air (°F)	Return Air (°F)	Discharge Air Velocity[1] (FPM)
OBIFA-4′	26.5	72-74	6-8	29-30	40-42	210-240
OBIFA-6.5′	35.3	72-74	6-8	29-30	40-42	210-240

[1] Average discharge air velocity at peak of defrost.

Condensing Unit Data

Model	Volts	Phase	Frequency (Hz)	HP	RLA[2] (amps)	LRA[3] (amps)	Refrig.	lbs of Refrig.
OBIFA-4′	120	1	60	1/4	4.94	25	R134A	3.1
OBIFA-6.5′	120	1	60	1/3	7.20	29	R134A	3.5

[2] RLA - Running Load Amps.
[3] LRA - Locked Rotor Amps.

Defrost Controls

Model		Electric Defrost		Timed Off Defrost		Hot Gas Defrost		Reverse Air Defrost	
	Defrosts Per Day	Fail-safe (min)	Termination Temp. (°F)	Fail-safe (min)	Termination Temp. (°F)	Fail-safe (min)	Termination Temp. (°F)	Fail-safe (min)	Termination Temp. (°F)
OBIFA	4	- - - [4]	- - -	40	49	- - -	- - -	- - -	- - -

[4] NOTE: - - - not an option on this case model.

Medium Temperature Defrost Schedule

No. Per Day	Hours
1	12 midnight
2	12 am - 12 pm
3	6 am - 2 pm - 10 pm
4	12 - 6 am - 12 - 6 pm

All measurements are taken per ARI 1200 - 2002 specifications.

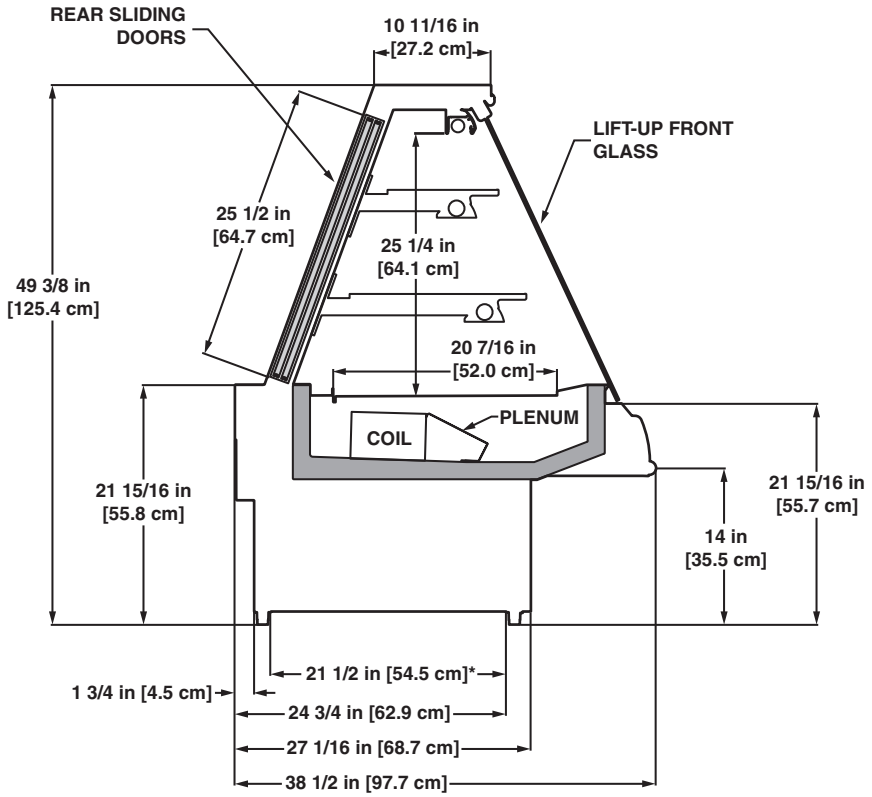

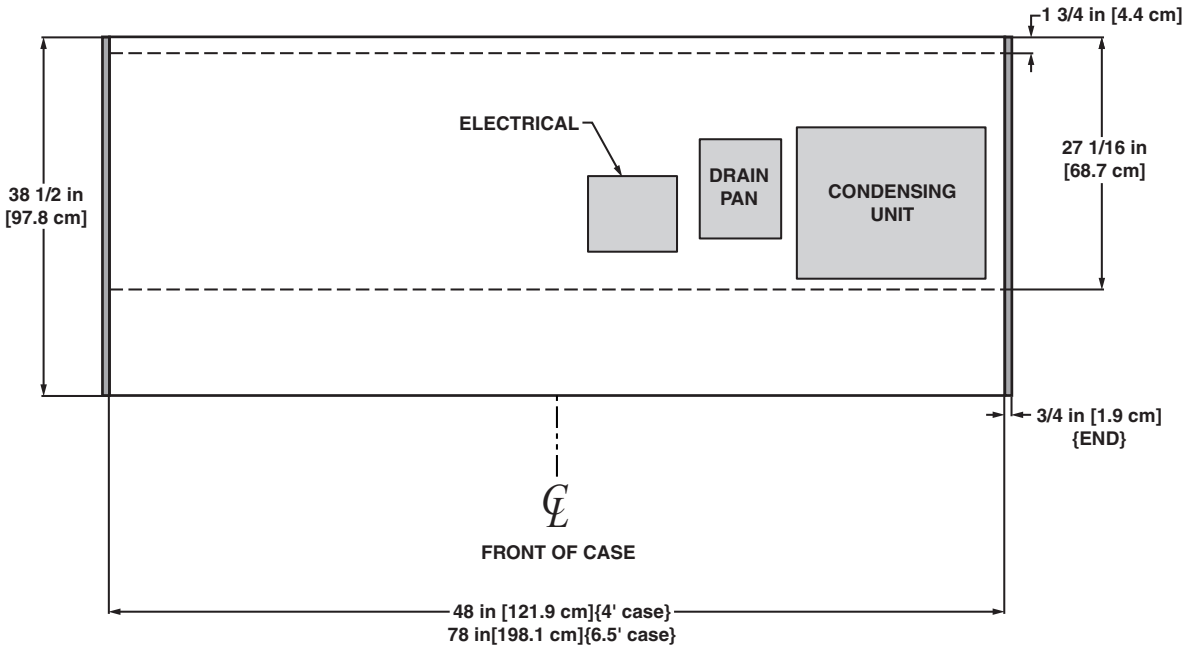

NOTES:

- ENDS ADD APPROXIMATELY 1 INCH TO CASE HEIGHT
- AVAILABLE SHELF SIZES: 10" & 16"

Full Service Flat Glass Dry Bakery Merchandiser

OBIFD - 4', & 6.5'

Lighting Data

Model		Typical per Light Row		Maximum Lighting	
		120 Volts		120 Volts	
		Amps	Watts	Amps	Watts
OBIFD	4'	0.57	68	1.14	137
	6.5'	0.57	68	2.11	253

Hill PHOENIX EXCELLENCE

A DOVER COMPANY

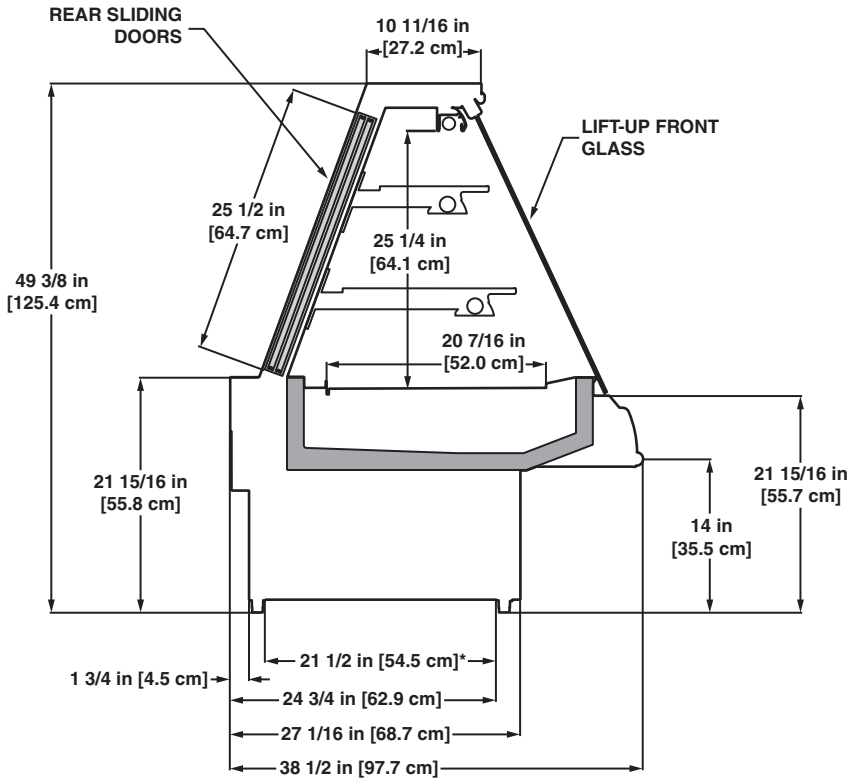

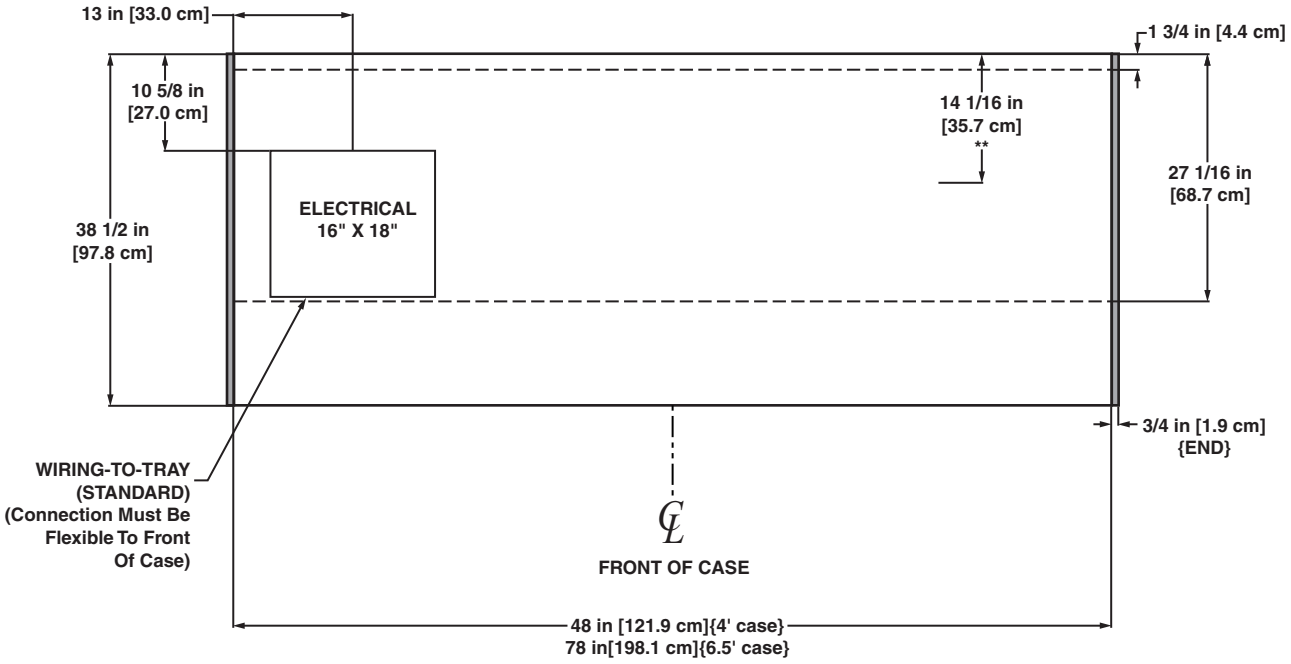

NOTES:

* STUB-UP AREA
** RECOMMENDED STUB-UP CENTERLINE FOR ELECTRICAL CONNECTIONS

- ENDS ADD APPROXIMATELY 1 INCH TO CASE HEIGHT
- AVAILABLE SHELF SIZES: 10" & 16"

Multi-Deck Self Service Hot Foods Merchandiser

ON3W - 4′, 6′ & 8′

Electrical Data

Model		Single Phase			Three Phase		
		240 Volts			240 Volts		
		Amps	Watts	Breaker	Amps	Watts	Breaker
ON3W[1]	4′	18.2	4340	30	- - -	- - -	- - -
	6′	- - -[2]	- - -	- - -	19	6480	30
	8′	- - -	- - -	- - -	25	8680	40

[1] Wiring configuration is 3 wire + ground on 4′ models and 4 wire + ground on 6′ & 8′ models.

[2] NOTE: - - - not an option on this case model.

Hill PHOENIX EXCELLENCE

A DOVER™ COMPANY

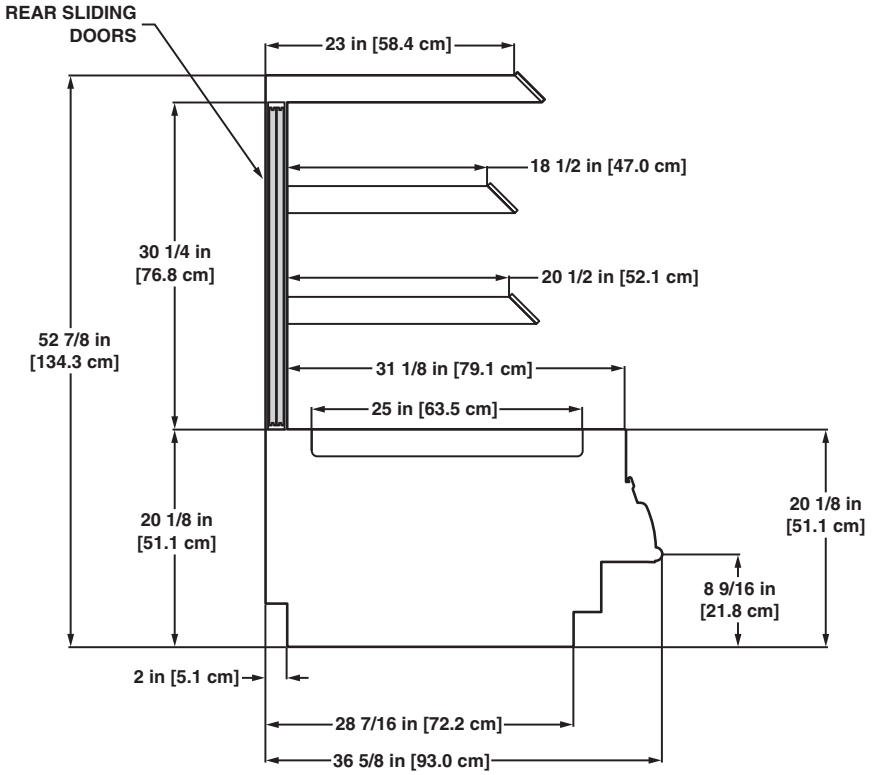
REAR SLIDING DOORS
23 in [58.4 cm]
18 1/2 in [47.0 cm]
30 1/4 in [76.8 cm]
20 1/2 in [52.1 cm]
52 7/8 in [134.3 cm]
31 1/8 in [79.1 cm]
25 in [63.5 cm]
20 1/8 in [51.1 cm]
20 1/8 in [51.1 cm]
8 9/16 in [21.8 cm]
2 in [5.1 cm]
28 7/16 in [72.2 cm]
36 5/8 in [93.0 cm]

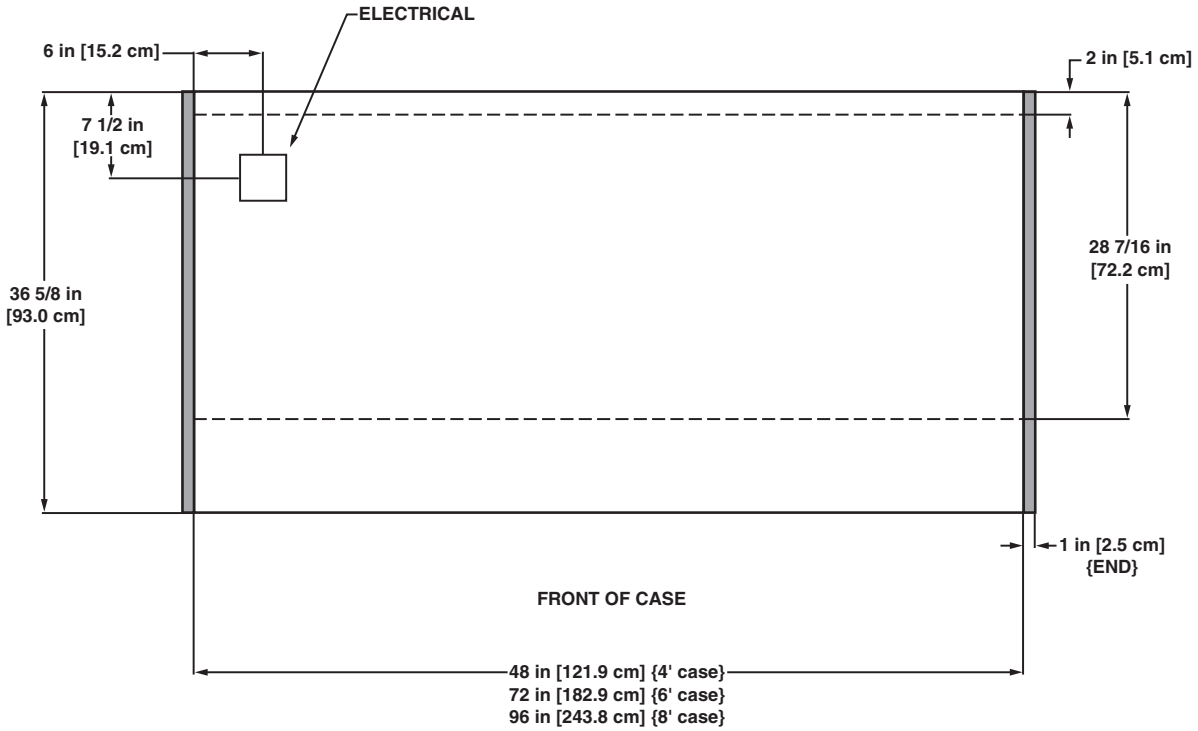
ELECTRICAL
6 in [15.2 cm]
2 in [5.1 cm]
7 1/2 in [19.1 cm]
28 7/16 in [72.2 cm]
36 5/8 in [93.0 cm]
1 in [2.5 cm] {END}
FRONT OF CASE
48 in [121.9 cm] {4' case}
72 in [182.9 cm] {6' case}
96 in [243.8 cm] {8' case}

Single Deck Cub Case Merchandiser
CUBNH - 4′, 6′ & 8′

Electrical Data

Model		Fans per Case	Standard Fans 120 Volts Amps	Standard Fans 120 Volts Watts	High Efficiency Fans 120 Volts Amps	High Efficiency Fans 120 Volts Watts	Anti-Condensate Heaters 120 Volts Amps	Anti-Condensate Heaters 120 Volts Watts	Defrost Heaters 208 Volts Amps	Defrost Heaters 208 Volts Watts	Defrost Heaters 240 Volts Amps	Defrost Heaters 240 Volts Watts
CUBNH	4′	2	0.30	36	---[1]	---	---	---	---	---	---	---
	6′	2	0.30	36	---	---	---	---	---	---	---	---
	8′	3	0.45	54	---	---	---	---	---	---	---	---

[1] NOTE: --- not an option on this case model.

Lighting Data

Model		Bulbs per Row	Bulb Length	Typical per Light Row 120 Volts Amps	Typical per Light Row 120 Volts Watts	Maximum Lighting 120 Volts Amps	Maximum Lighting 120 Volts Watts
CUBNH	4′	1	4′	0.25	30	0.25	30
	6′	2	3′	0.50	60	0.50	60
	8′	2	4′	0.50	60	0.50	60

Guidelines & Control Settings

Model	BTUH/ft[2]	Evaporator (°F)	Superheat Set Point @ Bulb (°F)
CUBNH	650	22	6-8

[2] BTUHs/ft listed are for parallel operation. Conventional ratings may be approximated by multiplying listed rating by 1.04.

Defrost Controls

Model	Defrosts Per Day	Run-Off Time (min)	Electric Defrost Fail-safe (min)	Electric Defrost Termination Temp. (°F)	Timed Off Defrost Fail-safe (min)	Timed Off Defrost Termination Temp. (°F)	Hot Gas Defrost Fail-safe (min)	Hot Gas Defrost Termination Temp. (°F)	Reverse Air Defrost Fail-safe (min)	Reverse Air Defrost Termination Temp. (°F)
CUBNH	3	6 - 8	---	---	20	47	---	---	---	---

Medium Temperature Defrost Schedule

No. Per Day	Hours
1	12 midnight
2	12 am - 12 pm
3	6 am - 2 pm - 10 pm
4	12 - 6 am - 12 - 6 pm

All measurements are taken per ARI 1200 - 2002 specifications.

6/07

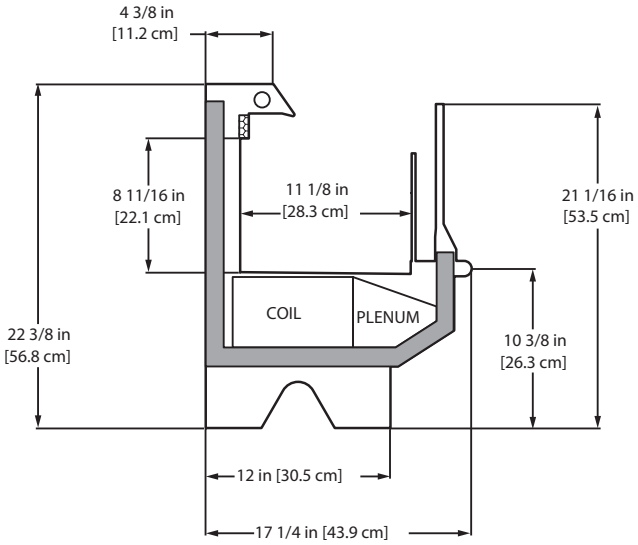
4 3/8 in
[11.2 cm]
8 11/16 in
[22.1 cm]
11 1/8 in
[28.3 cm]
21 1/16 in
[53.5 cm]
COIL
PLENUM
22 3/8 in
[56.8 cm]
10 3/8 in
[26.3 cm]
12 in [30.5 cm]
17 1/4 in [43.9 cm]

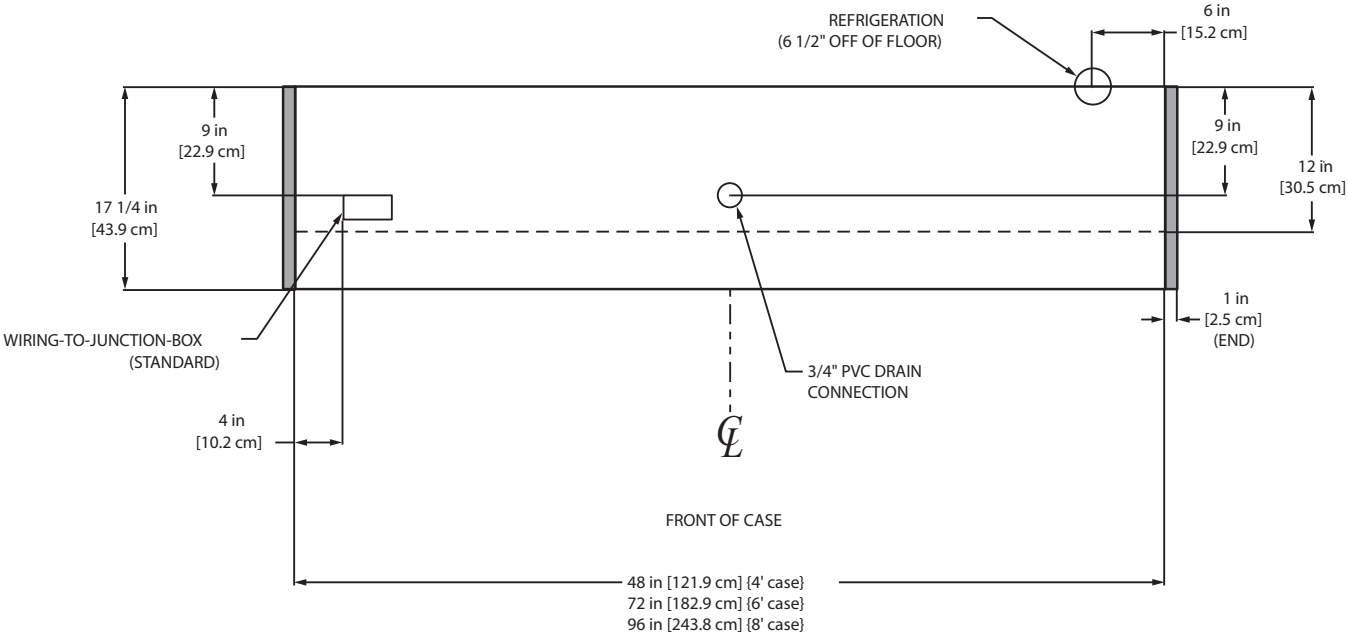
REFRIGERATION
(6 1/2" OFF OF FLOOR)
6 in
[15.2 cm]
9 in
[22.9 cm]
9 in
[22.9 cm]
12 in
[30.5 cm]
17 1/4 in
[43.9 cm]
1 in
[2.5 cm]
(END)
WIRING-TO-JUNCTION-BOX
(STANDARD)
3/4" PVC DRAIN
CONNECTION
4 in
[10.2 cm]
℄
FRONT OF CASE
48 in [121.9 cm] {4' case}
72 in [182.9 cm] {6' case}
96 in [243.8 cm] {8' case}

Single Deck Cub Case Merchandiser

CUBN - 4′, 6′ & 8′

Electrical Data

Model		Fans per Case	Standard Fans 120 Volts Amps	Standard Fans 120 Volts Watts	High Efficiency Fans 120 Volts Amps	High Efficiency Fans 120 Volts Watts	Anti-Condensate Heaters 120 Volts Amps	Anti-Condensate Heaters 120 Volts Watts	Defrost Heaters 208 Volts Amps	Defrost Heaters 208 Volts Watts	Defrost Heaters 240 Volts Amps	Defrost Heaters 240 Volts Watts
CUBN	4′	2	0.30	36	---[1]	---	---	---	---	---	---	---
	6′	2	0.30	36	---	---	---	---	---	---	---	---
	8′	3	0.45	54	---	---	---	---	---	---	---	---

[1] NOTE: --- not an option on this case model.

Lighting Data

Model		Bulbs per Row	Bulb Length	Typical per Light Row 120 Volts Amps	Typical per Light Row 120 Volts Watts	Maximum Lighting 120 Volts Amps	Maximum Lighting 120 Volts Watts
CUBN	4′	1	4′	0.25	30	0.25	30
	6′	2	3′	0.50	60	0.50	60
	8′	2	4′	0.50	60	0.50	60

Guidelines & Control Settings

Model	BTUH/ft[2]	Evaporator (°F)	Superheat Set Point @ Bulb (°F)
CUBN	650	22	6-8

[2] BTUHs/ft listed are for parallel operation. Conventional ratings may be approximated by multiplying listed rating by 1.04.

Defrost Controls

Model	Defrosts Per Day	Run-Off Time (min)	Electric Defrost Fail-safe (min)	Electric Defrost Termination Temp. (°F)	Timed Off Defrost Fail-safe (min)	Timed Off Defrost Termination Temp. (°F)	Hot Gas Defrost Fail-safe (min)	Hot Gas Defrost Termination Temp. (°F)	Reverse Air Defrost Fail-safe (min)	Reverse Air Defrost Termination Temp. (°F)
CUBN	3	6 - 8	---	---	20	47	---	---	---	---

Medium Temperature Defrost Schedule

No. Per Day	Hours
1	12 midnight
2	12 am - 12 pm
3	6 am - 2 pm - 10 pm
4	12 - 6 am - 12 - 6 pm

All measurements are taken per ARI 1200 - 2002 specifications.

6/07

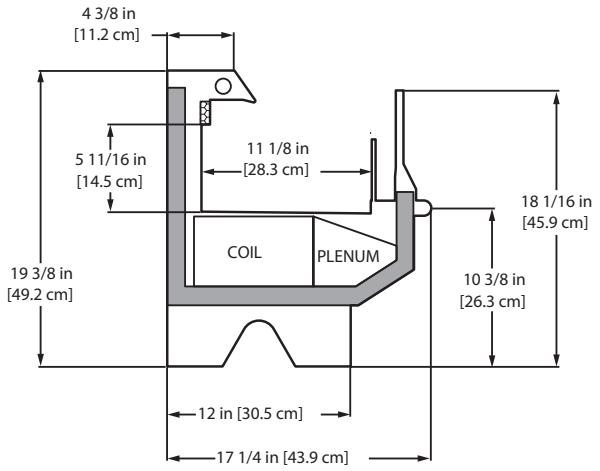
4 3/8 in
[11.2 cm]
5 11/16 in
[14.5 cm]
11 1/8 in
[28.3 cm]
18 1/16 in
[45.9 cm]
COIL
PLENUM
19 3/8 in
[49.2 cm]
10 3/8 in
[26.3 cm]
12 in [30.5 cm]
17 1/4 in [43.9 cm]

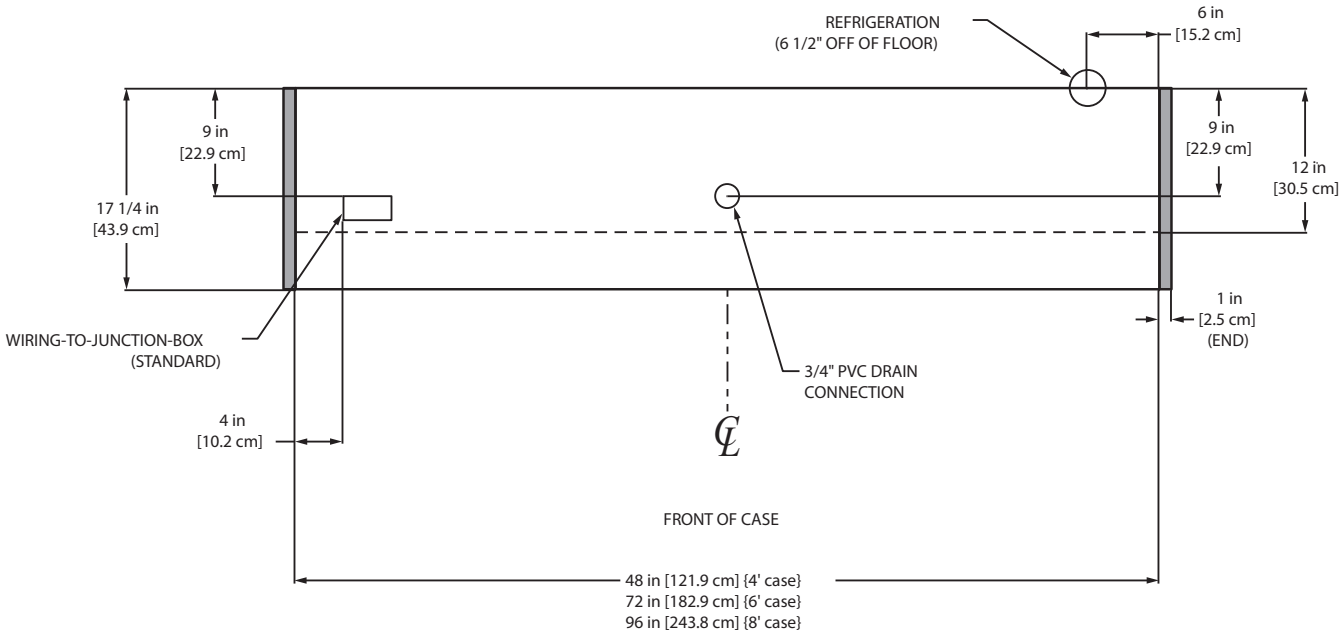
REFRIGERATION
(6 1/2" OFF OF FLOOR)
6 in
[15.2 cm]
9 in
[22.9 cm]
9 in
[22.9 cm]
12 in
[30.5 cm]
17 1/4 in
[43.9 cm]
1 in
[2.5 cm]
(END)
WIRING-TO-JUNCTION-BOX
(STANDARD)
3/4" PVC DRAIN
CONNECTION
4 in
[10.2 cm]
℄
FRONT OF CASE
48 in [121.9 cm] {4' case}
72 in [182.9 cm] {6' case}
96 in [243.8 cm] {8' case}

Single Deck Cub Case Merchandiser

CUBW - 4′, 6′ & 8′

Electrical Data

Model		Fans per Case	Standard Fans 120 Volts Amps	Standard Fans 120 Volts Watts	High Efficiency Fans 120 Volts Amps	High Efficiency Fans 120 Volts Watts	Anti-Condensate Heaters 120 Volts Amps	Anti-Condensate Heaters 120 Volts Watts	Defrost Heaters 208 Volts Amps	Defrost Heaters 208 Volts Watts	Defrost Heaters 240 Volts Amps	Defrost Heaters 240 Volts Watts
CUBW	4′	2	0.30	36	---[1]	---	---	---	---	---	---	---
	6′	2	0.30	36	---	---	---	---	---	---	---	---
	8′	3	0.45	54	---	---	---	---	---	---	---	---

[1] NOTE: --- not an option on this case model.

Lighting Data

Model		Bulbs per Row	Bulb Length	Typical per Light Row 120 Volts Amps	Typical per Light Row 120 Volts Watts	Maximum Lighting 120 Volts Amps	Maximum Lighting 120 Volts Watts
CUBW	4′	1	4′	0.25	30	0.25	30
	6′	2	3′	0.50	60	0.50	60
	8′	2	4′	0.50	60	0.50	60

Guidelines & Control Settings

Model	BTUH/ft[2]	Evaporator (°F)	Superheat Set Point @ Bulb (°F)
CUBW	650	22	6-8

[2] BTUHs/ft listed are for parallel operation. Conventional ratings may be approximated by multiplying listed rating by 1.04.

Defrost Controls

Model	Defrosts Per Day	Run-Off Time (min)	Electric Defrost Fail-safe (min)	Electric Defrost Termination Temp. (°F)	Timed Off Defrost Fail-safe (min)	Timed Off Defrost Termination Temp. (°F)	Hot Gas Defrost Fail-safe (min)	Hot Gas Defrost Termination Temp. (°F)	Reverse Air Defrost Fail-safe (min)	Reverse Air Defrost Termination Temp. (°F)
CUBW	3	6 - 8	---	---	20	47	---	---	---	---

Medium Temperature Defrost Schedule

No. Per Day	Hours
1	12 midnight
2	12 am - 12 pm
3	6 am - 2 pm - 10 pm
4	12 - 6 am - 12 - 6 pm

All measurements are taken per ARI 1200 - 2002 specifications.

6/07

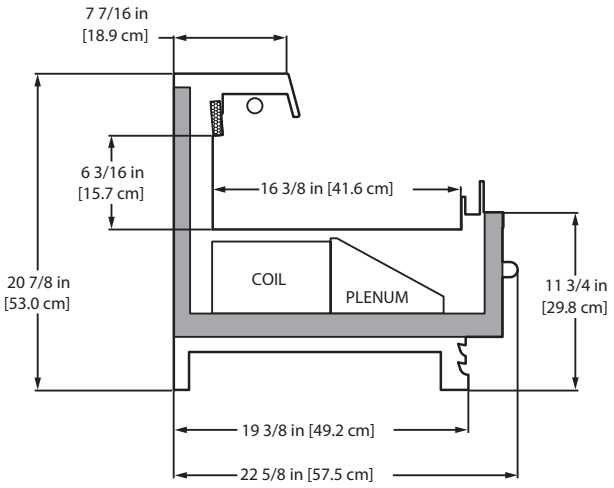
7 7/16 in
[18.9 cm]
6 3/16 in
[15.7 cm]
16 3/8 in [41.6 cm]
20 7/8 in
[53.0 cm]
COIL
PLENUM
11 3/4 in
[29.8 cm]
19 3/8 in [49.2 cm]
22 5/8 in [57.5 cm]

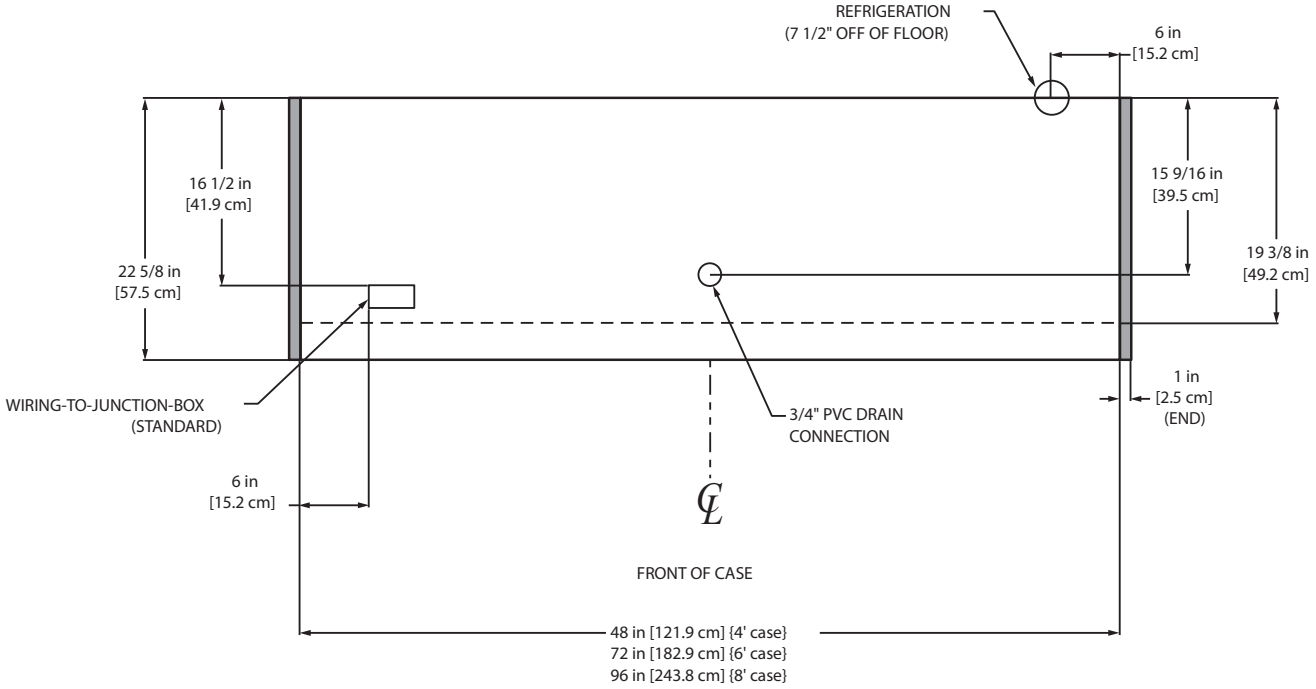
REFRIGERATION
(7 1/2" OFF OF FLOOR)
6 in
[15.2 cm]
16 1/2 in
[41.9 cm]
15 9/16 in
[39.5 cm]
19 3/8 in
[49.2 cm]
22 5/8 in
[57.5 cm]
WIRING-TO-JUNCTION-BOX
(STANDARD)
3/4" PVC DRAIN
CONNECTION
1 in
[2.5 cm]
(END)
6 in
[15.2 cm]
FRONT OF CASE
48 in [121.9 cm] {4' case}
72 in [182.9 cm] {6' case}
96 in [243.8 cm] {8' case}

Single Deck Ice Cub Case Merchandiser

CUBD - 4′, 6′ & 8′

Lighting Data

Model		Bulbs per Row	Bulb Length	Typical per Light Row		Maximum Lighting	
				120 Volts		120 Volts	
				Amps	Watts	Amps	Watts
CUBD	4′	1	4′	0.25	30	0.25	30
	6′	2	3′	0.50	60	0.50	60
	8′	2	4′	0.50	60	0.50	60

Hill PHOENIX EXCELLENCE

A DOVER™ COMPANY

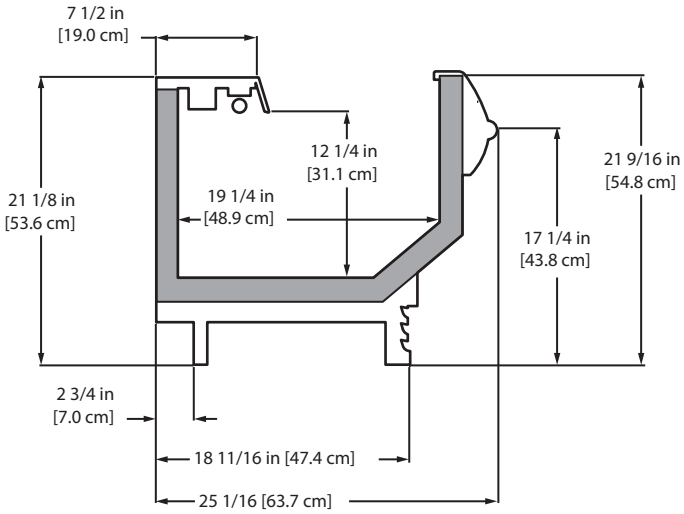
7 1/2 in
[19.0 cm]
12 1/4 in
[31.1 cm]
21 9/16 in
[54.8 cm]
21 1/8 in
[53.6 cm]
19 1/4 in
[48.9 cm]
17 1/4 in
[43.8 cm]
2 3/4 in
[7.0 cm]
18 11/16 in [47.4 cm]
25 1/16 [63.7 cm]

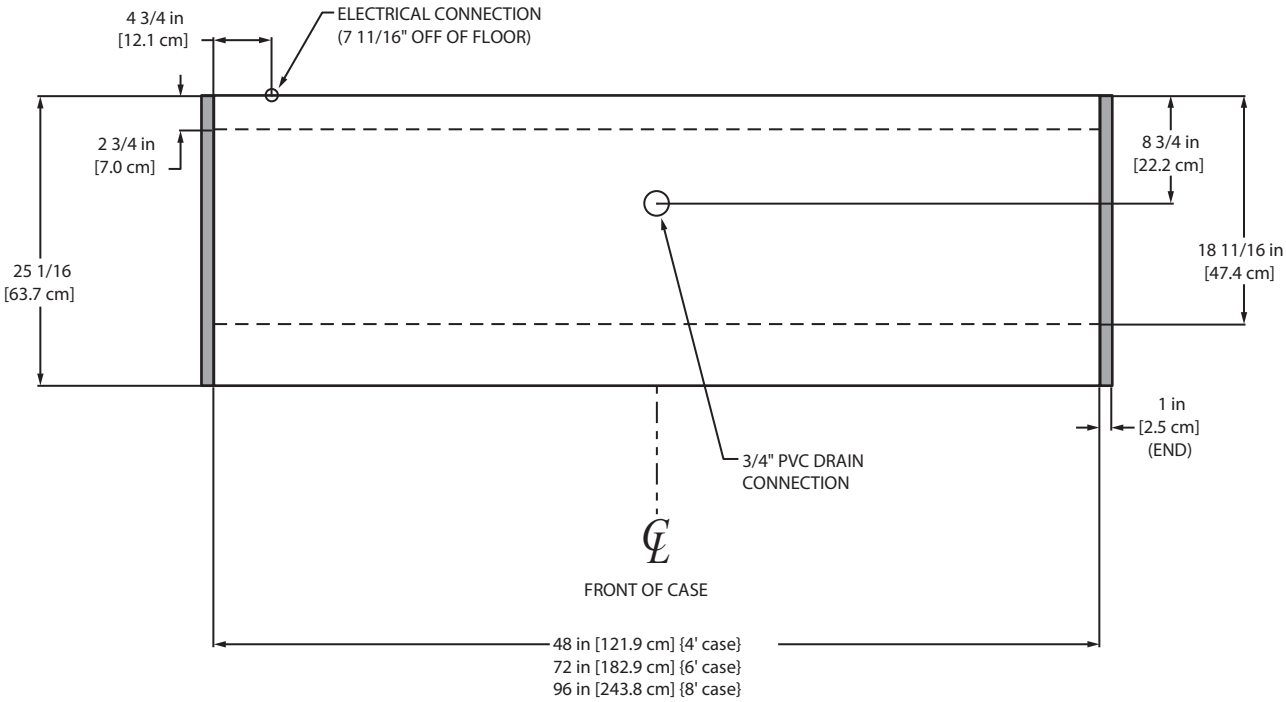
4 3/4 in
[12.1 cm]
ELECTRICAL CONNECTION
(7 11/16" OFF OF FLOOR)
2 3/4 in
[7.0 cm]
8 3/4 in
[22.2 cm]
25 1/16
[63.7 cm]
18 11/16 in
[47.4 cm]
1 in
[2.5 cm]
(END)
3/4" PVC DRAIN
CONNECTION
FRONT OF CASE
48 in [121.9 cm] {4' case}
72 in [182.9 cm] {6' case}
96 in [243.8 cm] {8' case}

MOBILE SELF-CONTAINED

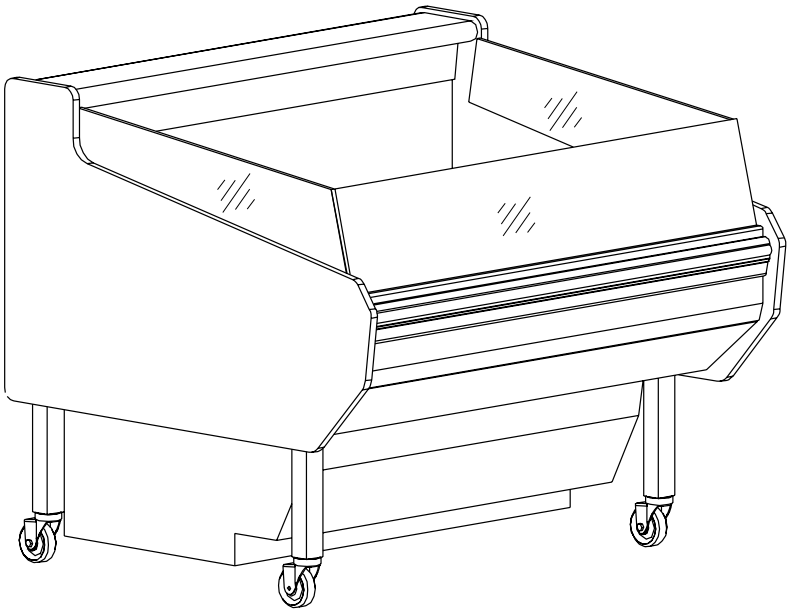

Notes:

- **Cases comply with ANSI / NSF* Standard 7. Units marked as components require remote refrigeration.**
- **Allow for an extra 1/8" per joint when lining up merchandisers.**
- **Front sill height does not affect case performance unless specifically shown.**
- **Front and rear sill heights vary with baseframe height.**

* ANSI - American National Standard Institute
NSF - National Sanitation Foundation

Single Deck Self-Contained Mobile Deli Merchandiser

MDCA-4′ & 6′

System Data

Model	Volts	Phase	Hz	Plug Style	Cord Length
MDCA-4′	120	1	60	NEMA L5-20 or NEMA 5-20	10 ft
MDCA-6′	120	1	60	NEMA L5-30	10 ft

Guidelines & Control Settings

Model	24 hr Energy Usage (kWh)	Suction Pressure @ Case Outlet (psig)	Superheat Set Point @ Bulb (°F)	Discharge Air (°F)	Return Air (°F)	Discharge Air Velocity[1] (FPM)
MDCA-4′	16.6	52	6-8	25	36	295
MDCA-6′		52	6-8	25	36	295

[1] Average discharge air velocity at peak of defrost.

Condensing Unit Data

Model	Volts	Phase	Frequency (Hz)	HP	RLA[2] (amps)	LRA[3] (amps)	Refrig.	lbs of Refrig.
MDCA-4′	115	1	60	1/3	7.4	29.8	R404A	3.5
MDCA-6′	115	1	60	1/2	10.1	51.0	R404A	

[2] RLA - Running Load Amps.

[3] LRA - Locked Rotor Amps.

Defrost Controls

		Electric Defrost		Timed Off Defrost		Hot Gas Defrost		Reverse Air Defrost	
Model	Defrosts Per Day	Fail-safe (min)	Termination Temp. (°F)	Fail-safe (min)	Termination Temp. (°F)	Fail-safe (min)	Termination Temp. (°F)	Fail-safe (min)	Termination Temp. (°F)
MDCA	4	35	47	- - -[4]	- - -	- - -	- - -	- - -	- - -

[4] NOTE: - - - not an option on this case model.

Medium Temperature Defrost Schedule

No. Per Day	Hours
1	12 midnight
2	12 am - 12 pm
3	6 am - 2 pm - 10 pm
4	12 - 6 am - 12 - 6 pm

All measurements are taken per ARI 1200 - 2002 specifications.

Hill PHOENIX EXCELLENCE

A DOVER COMPANY

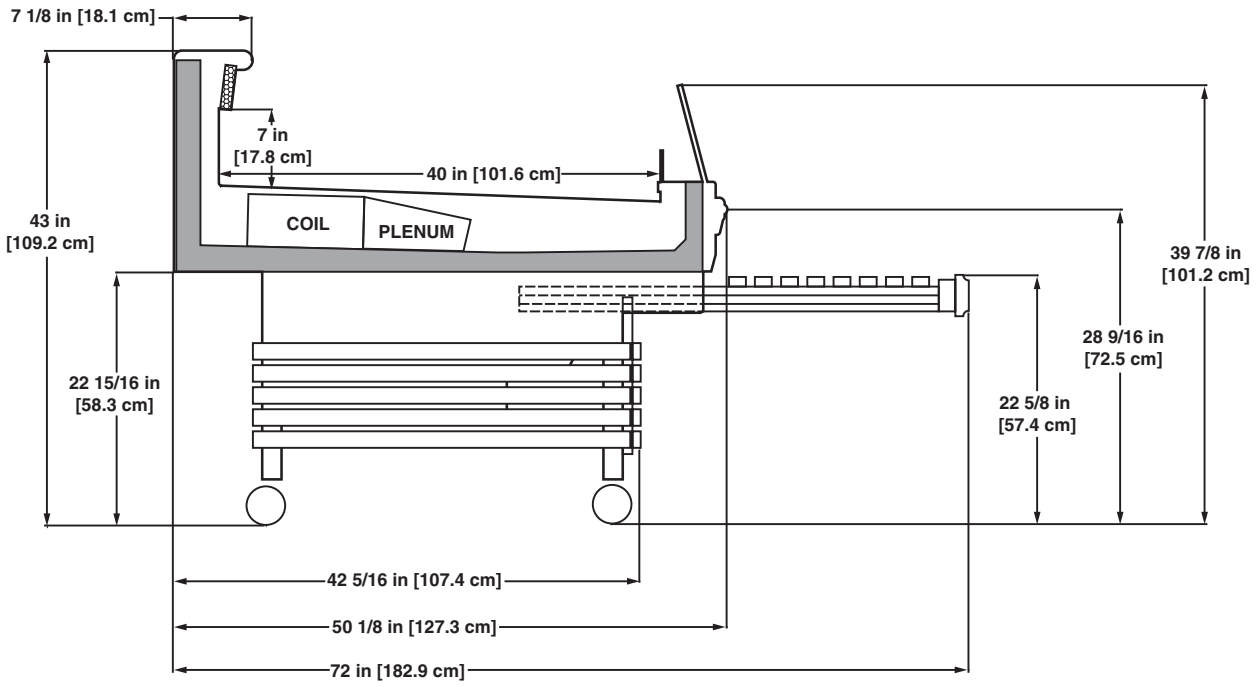

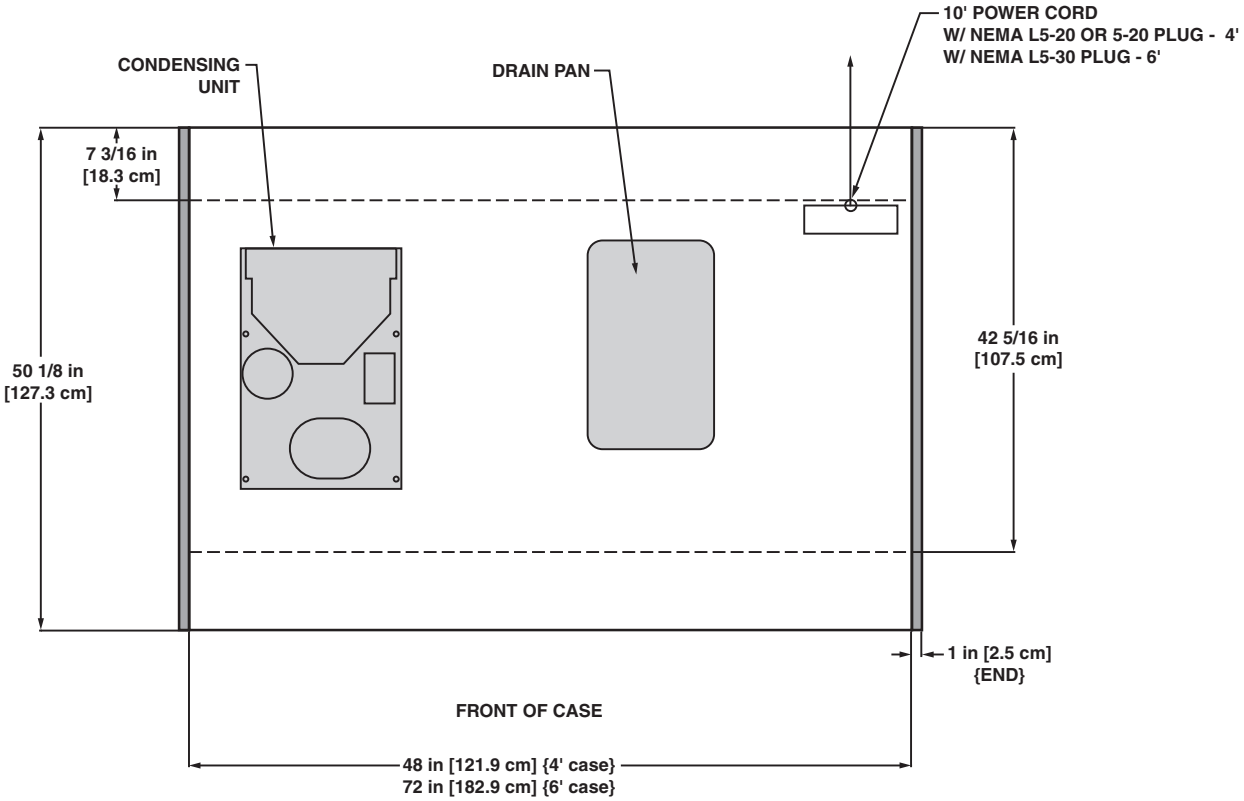

NOTES:

- ENDS ADD APPROXIMATELY 1 INCH TO CASE HEIGHT
- CASE BASEFRAME ALLOWS OVERALL HEIGHT TO BE LOWERED AS MUCH AS 6" IN 1" INCREMENTS

Single Deck Self-Contained Mobile Deli/Meat Merchandiser

MMCA-4', 6' & 8'

System Data

Model	Volts	Phase	Hz	Plug Style	Cord Length
MMCA-4'	120	1	60	NEMA L5-20 or NEMA 5-20	10 ft
MMCA-6'	120	1	60	NEMA L5-30	10 ft
MMCA-8'	120	1	60	NEMA L5-30	10 ft

Guidelines & Control Settings

Model	24 hr Energy Usage (kWh)	Suction Pressure @ Case Outlet (psig)	Superheat Set Point @ Bulb (°F)	Discharge Air (°F)	Return Air (°F)	Discharge Air Velocity[1] (FPM)
MMCA-4'	17.2	49	6-8	24	35	140
MMCA-6'		49	6-8	24	35	140
MMCA-8'		49	6-8	24	35	140

[1] Average discharge air velocity at peak of defrost.

Condensing Unit Data

Model	Volts	Phase	Frequency (Hz)	HP	RLA[2] (amps)	LRA[3] (amps)	Refrig.	lbs of Refrig.
MMCA-4'	115	1	60	1/3	7.4	29.8	R404A	3.5
MMCA-6'	115	1	60	1/2	10.1	51.0	R404A	
MMCA-8'	115	1	60	1/2	10.1	51.0	R404A	

[2] RLA - Running Load Amps.

[3] LRA - Locked Rotor Amps.

Defrost Controls

Model	Defrosts Per Day	Electric Defrost		Timed Off Defrost		Hot Gas Defrost		Reverse Air Defrost	
		Fail-safe (min)	Termination Temp. (°F)	Fail-safe (min)	Termination Temp. (°F)	Fail-safe (min)	Termination Temp. (°F)	Fail-safe (min)	Termination Temp. (°F)
MMCA	3	35	47	- - -[4]	- - -	- - -	- - -	- - -	- - -

[4] NOTE: - - - not an option on this case model.

Medium Temperature Defrost Schedule

No. Per Day	Hours
1	12 midnight
2	12 am - 12 pm
3	6 am - 2 pm - 10 pm
4	12 - 6 am - 12 - 6 pm

All measurements are taken per ARI 1200 - 2002 specifications.

Hill PHOENIX EXCELLENCE

A DOVER COMPANY

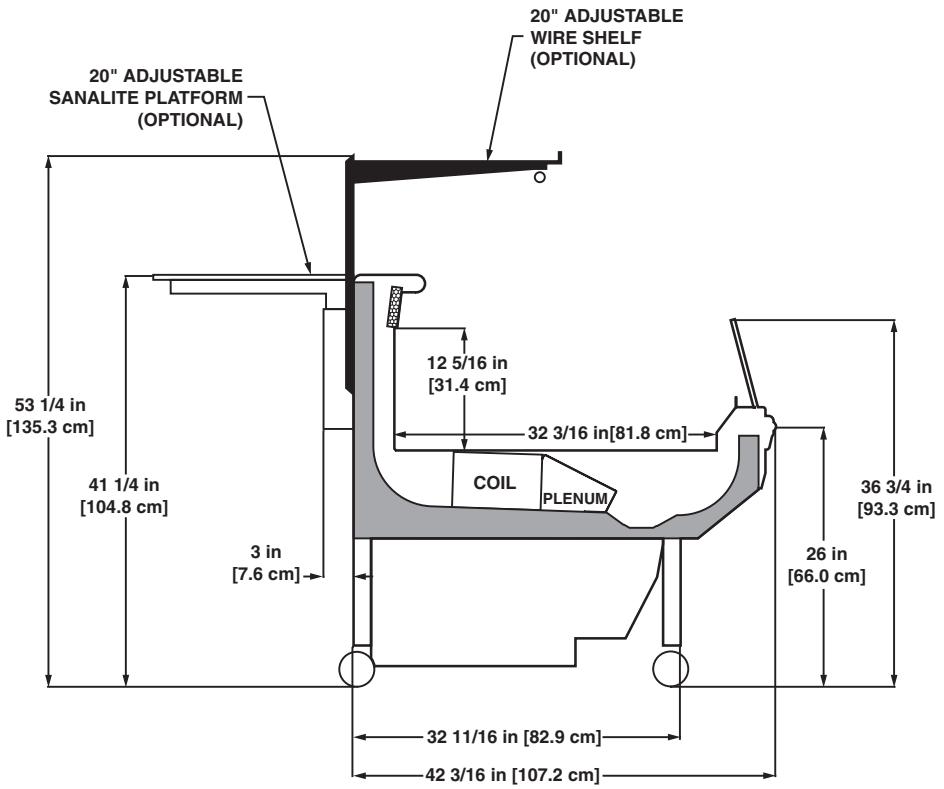

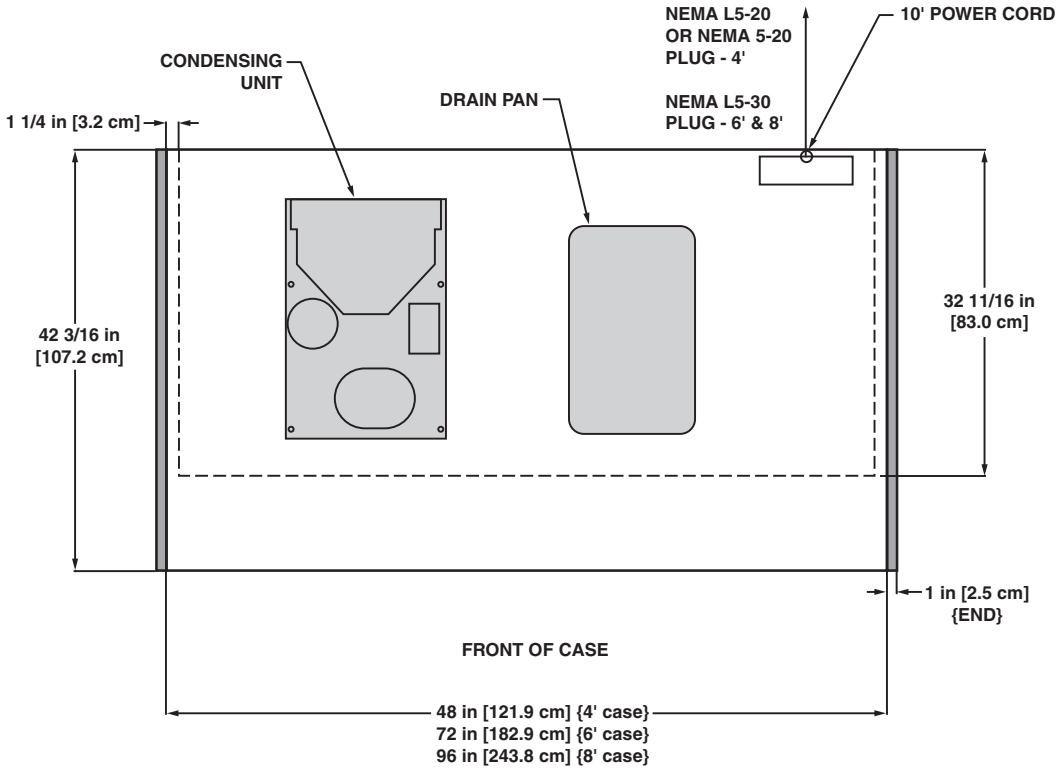

NOTES:

- ENDS ADD APPROXIMATELY 1 INCH TO CASE HEIGHT

Single Deck Self-Contained Mobile Deli/Meat Merchandiser

MMRA - 2′, 3′, 4′ & 6′

System Data

Model	Volts	Phase	Hz	Plug Style	Cord Length
MMRA	120	1	60	NEMA 5-20	6 ft

Guidelines & Control Settings

Model	24 hr Energy Usage (kWh)	Suction Pressure @ Case Outlet (psig)	Superheat Set Point @ Bulb (°F)	Discharge Air (°F)	Return Air (°F)	Discharge Air Velocity[1] (FPM)
MMRA		15	6-8	29	39	180

[1] Average discharge air velocity at peak of defrost.

Condensing Unit Data

Model	Volts	Phase	Frequency (Hz)	HP	RLA[2] (amps)	LRA[3] (amps)	Refrig.	lbs of Refrig.
MMRA - 2′	115	1	60	1/4	4.94	25	134A	1.75
MMRA - 3′	115	1	60	1/4	7.20	29	134A	1.94
MMRA - 4′	115	1	60	1/3	9.30	36	134A	3.00
MMRA - 6′	115	1	60	1/2	9.00	51	134A	3.38

[2] RLA - Running Load Amps.

[3] LRA - Locked Rotor Amps.

Defrost Controls

		Electric Defrost		Timed Off Defrost		Hot Gas Defrost		Reverse Air Defrost	
Model	Defrosts Per Day	Fail-safe (min)	Termination Temp. (°F)	Fail-safe (min)	Termination Temp. (°F)	Fail-safe (min)	Termination Temp. (°F)	Fail-safe (min)	Termination Temp. (°F)
MMRA	4	- - -[4]	- - -	30	47	- - -	- - -	- - -	- - -

[4] NOTE: - - - not an option on this case model.

Medium Temperature Defrost Schedule

No. Per Day	Hours
1	12 midnight
2	12 am - 12 pm
3	6 am - 2 pm - 10 pm
4	12 - 6 am - 12 - 6 pm

All measurements are taken per CRMA specifications.

6/07

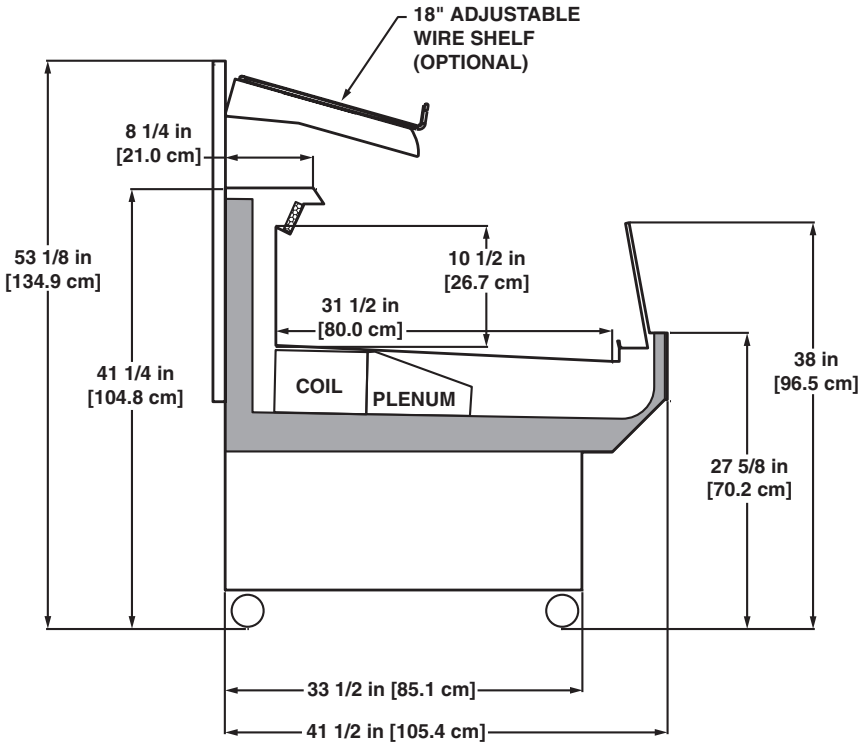

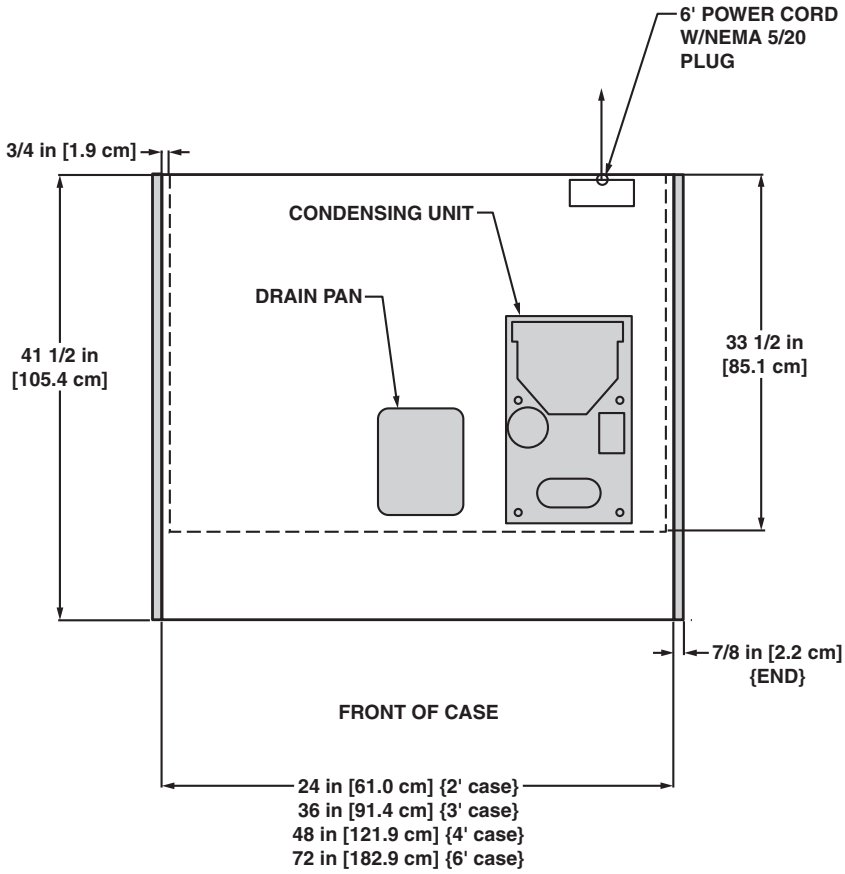

NOTE:
ENDS ADD APPROXIMATELY 1 INCH TO CASE HEIGHT

Single Deck Self-Contained Mobile Produce Merchandiser

MPCA - 8'

System Data

Model	Volts	Phase	Hz	Plug Style	Cord Length
MPCA	120	1	60	NEMA L5-30	10 ft

Guidelines & Control Settings

Model	24 hr Energy Usage (kWh)	Suction Pressure @ Case Outlet (psig)	Superheat Set Point @ Bulb (°F)	Discharge Air (°F)	Return Air (°F)	Discharge Air Velocity[1] (FPM)
MPCA		19.9	6-8	30	42	163

[1] Average discharge air velocity at peak of defrost.

Condensing Unit Data

Model	Volts	Phase	Frequency (Hz)	HP	RLA[2] (amps)	LRA[3] (amps)	Refrig.	lbs of Refrig.
MPCA	120	1	60	1/2	12.9	66.3	R134A	

[2] RLA - Running Load Amps.

[3] LRA - Locked Rotor Amps.

Defrost Controls

Model			Electric Defrost		Timed Off Defrost		Hot Gas Defrost		Reverse Air Defrost	
	Defrosts Per Day	Run-Off Time (min)	Fail-safe (min)	Termination Temp. (°F)	Fail-safe (min)	Termination Temp. (°F)	Fail-safe (min)	Termination Temp. (°F)	Fail-safe (min)	Termination Temp. (°F)
MPCA	3	6 - 8	40	49	60	47	- - - [3]	- - -	- - -	- - -

[3] NOTE: - - - not an option on this case model.

Medium Temperature Defrost Schedule

No. Per Day	Hours
1	12 midnight
2	12 am - 12 pm
3	6 am - 2 pm - 10 pm
4	12 - 6 am - 12 - 6 pm

All measurements are taken per ARI 1200 - 2002 specifications.

NSF COMPONENT

c UL us

Hill PHOENIX EXCELLENCE

A DOVER COMPANY

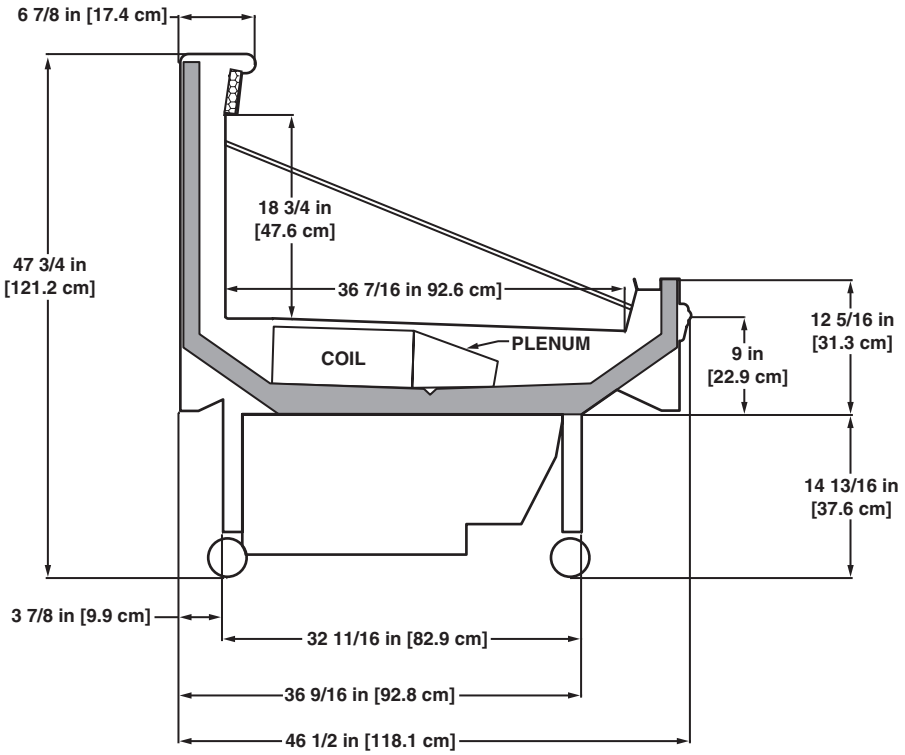

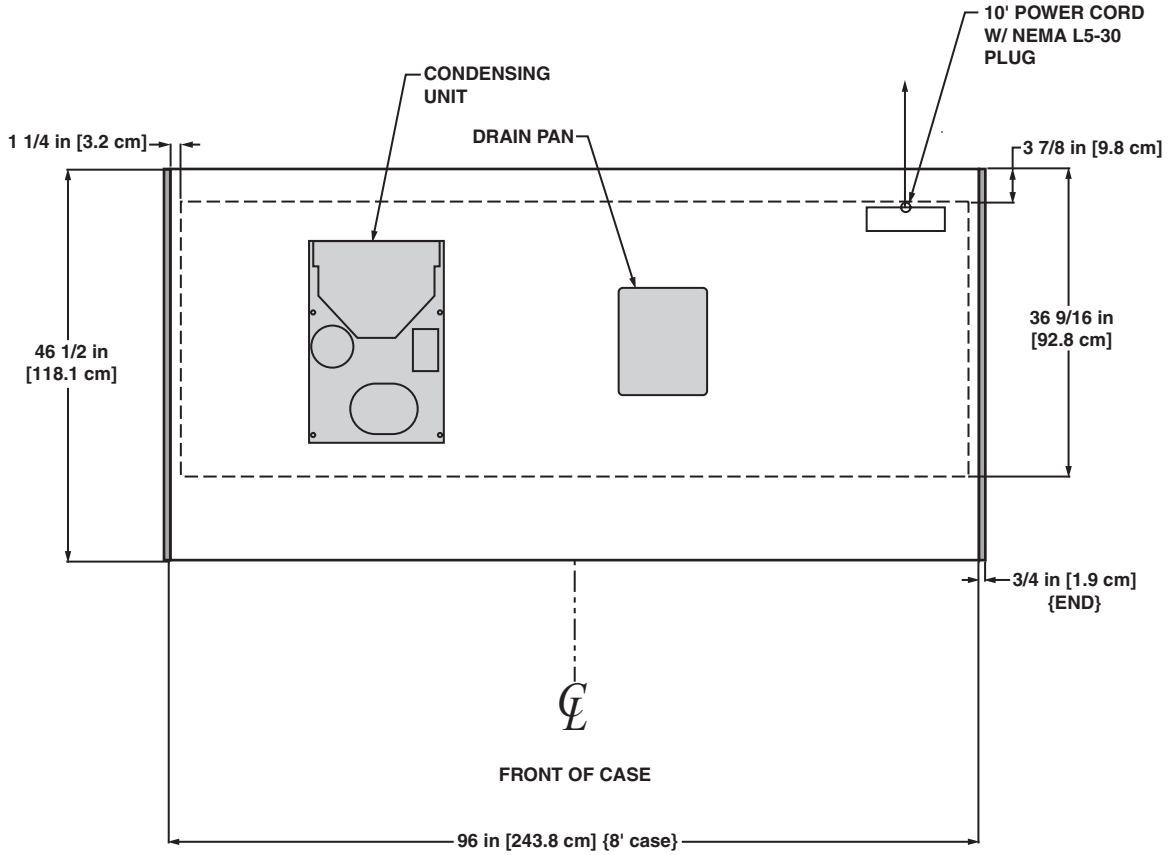

NSF COMPONENT c UL us

A DOVER COMPANY

System Data

Model	Volts	Phase	Hz	Plug Style	Cord Length
OSIOA	120	1	60	NEMA L5-20 or NEMA 5-20	10 ft

Guidelines & Control Settings

Model	24 hr Energy Usage (kWh)	Suction Pressure @ Case Outlet (psig)	Superheat Set Point @ Bulb (°F)	Discharge Air (°F)	Return Air (°F)	Discharge Air Velocity[1] (FPM)
OSIOA	14.1	12-14	6-8	26	34	182

[1] Average discharge air velocity at peak of defrost.

Condensing Unit Data

Model	Volts	Phase	Frequency (Hz)	HP	RLA[2] (amps)	LRA[3] (amps)	Refrig.	lbs of Refrig.
OSIOA	115	1	60	1/2	10.4	48.0	R134A	3.25

[2] RLA - Running Load Amps.
[3] LRA - Locked Rotor Amps.

Defrost Controls

Model	Defrosts Per Day	Electric Defrost		Timed Off Defrost		Hot Gas Defrost		Reverse Air Defrost	
		Fail-safe (min)	Termination Temp. (°F)	Fail-safe (min)	Termination Temp. (°F)	Fail-safe (min)	Termination Temp. (°F)	Fail-safe (min)	Termination Temp. (°F)
OSIOA	4	40	47	- - -[4]	- - -	- - -	- - -	- - -	- - -

[4] NOTE: - - - not an option on this case model.

Medium Temperature Defrost Schedule

No. Per Day	Hours
1	12 midnight
2	12 am - 12 pm
3	6 am - 2 pm - 10 pm
4	12 - 6 am - 12 - 6 pm

All measurements are taken per ARI 1200 - 2002 specifications.

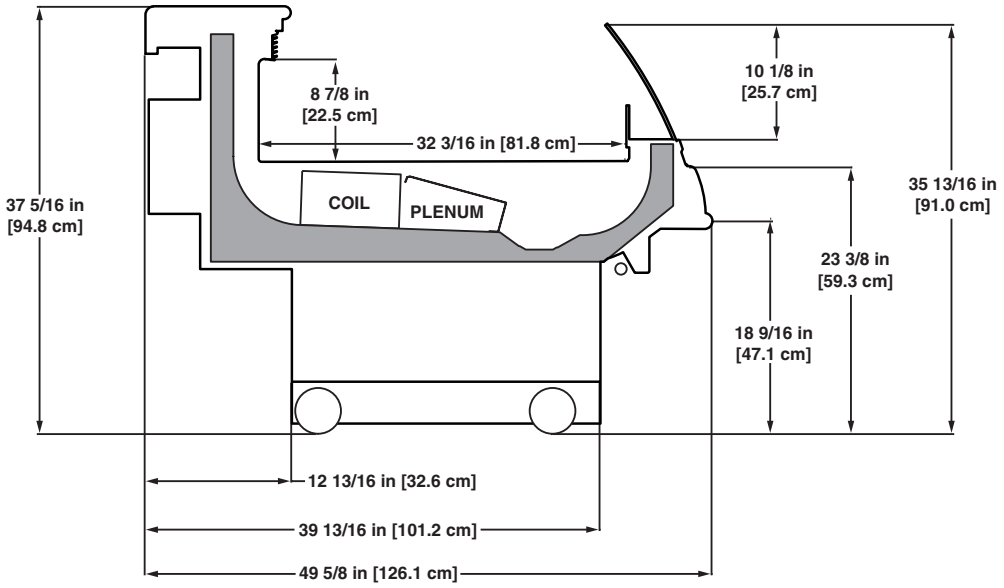

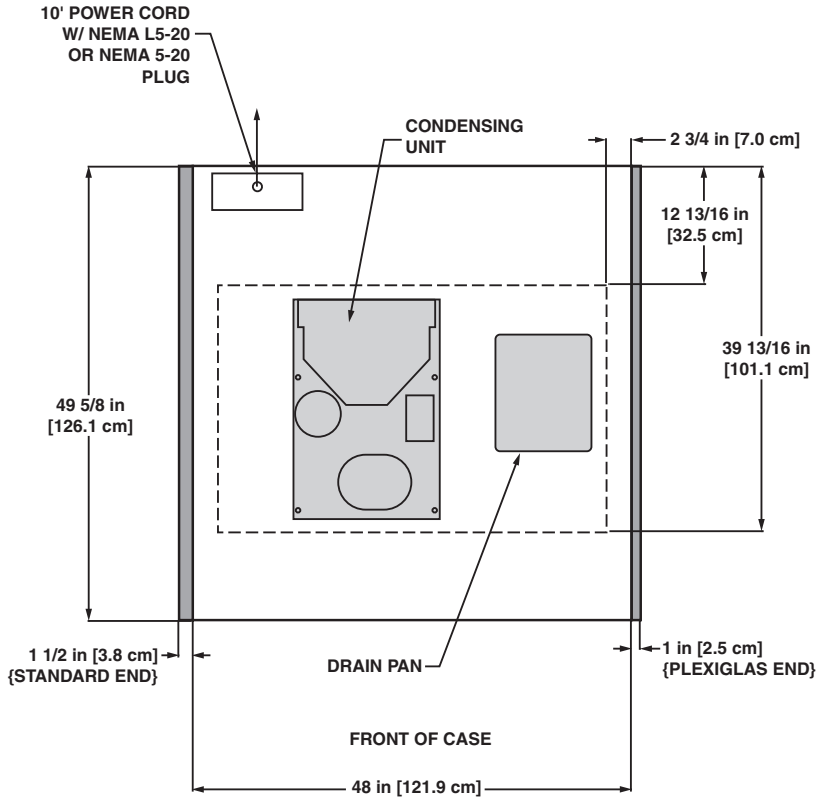

NOTES:

- ENDS ADD APPROXIMATELY 1 INCH TO CASE HEIGHT

International Style Self-Contained Mobile Deli/Meat/Seafood Prep Merchandiser

OSIOPA-4'

System Data

Model	Volts	Phase	Hz	Plug Style	Cord Length
OSIOPA	120	1	60	NEMA L5-20 or NEMA 5-20	10 ft

Guidelines & Control Settings

Model	24 hr Energy Usage (kWh)	Suction Pressure @ Case Outlet (psig)	Superheat Set Point @ Bulb (°F)	Discharge Air (°F)	Return Air (°F)	Discharge Air Velocity[1] (FPM)
OSIOPA deli	13.6	20	6-8	34	36	200
OSIOPA meat	18.0	16	6-8	32	36	200

[1] Average discharge air velocity at peak of defrost.

Condensing Unit Data

Model	Volts	Phase	Frequency (Hz)	HP	RLA[2] (amps)	LRA[3] (amps)	Refrig.	lbs of Refrig.
OSIOPA	120	1	60	1/3	7.2	29.0	R134A	2.25

[2] RLA - Running Load Amps.

[3] LRA - Locked Rotor Amps.

Defrost Controls

		Electric Defrost		Timed Off Defrost		Hot Gas Defrost		Reverse Air Defrost	
Model	Defrosts Per Day	Fail-safe (min)	Termination Temp. (°F)	Fail-safe (min)	Termination Temp. (°F)	Fail-safe (min)	Termination Temp. (°F)	Fail-safe (min)	Termination Temp. (°F)
OSIOPA	2	40	47	- - -[4]	- - -	- - -	- - -	- - -	- - -

[4] NOTE: - - - not an option on this case model.

Medium Temperature Defrost Schedule

No. Per Day	Hours
1	12 midnight
2	12 am - 12 pm
3	6 am - 2 pm - 10 pm
4	12 - 6 am - 12 - 6 pm

Hill PHOENIX EXCELLENCE

A DOVER COMPANY

All measurements are taken per ARI 1200 - 2002 specifications.

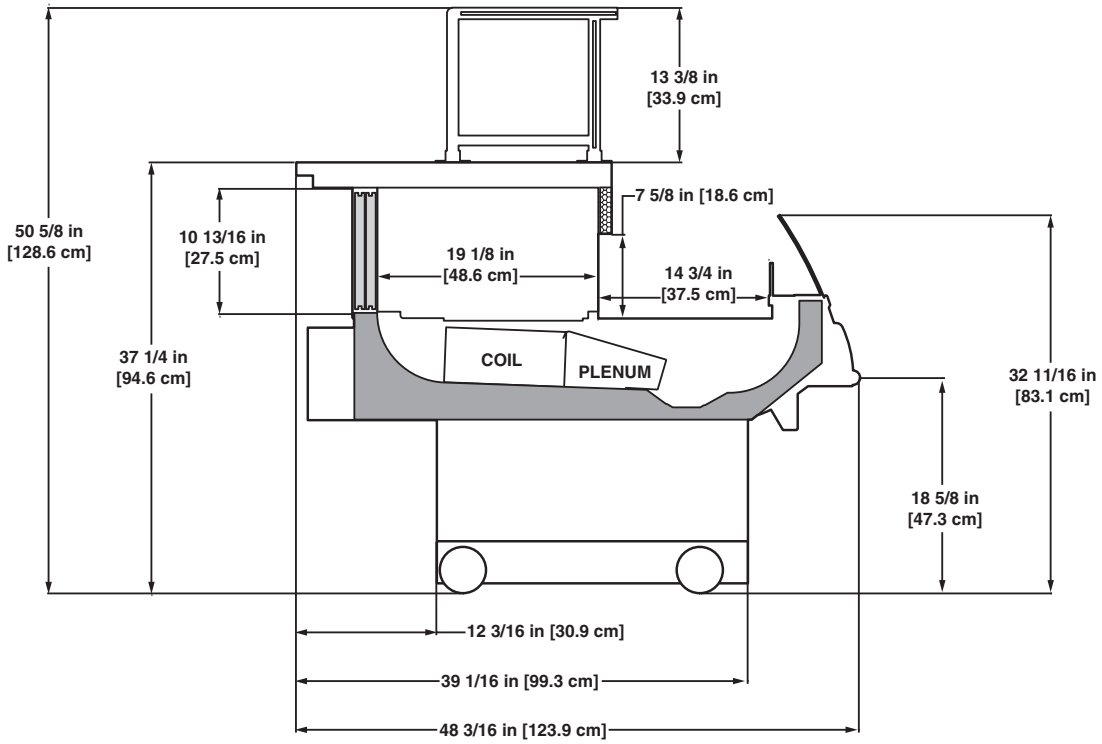

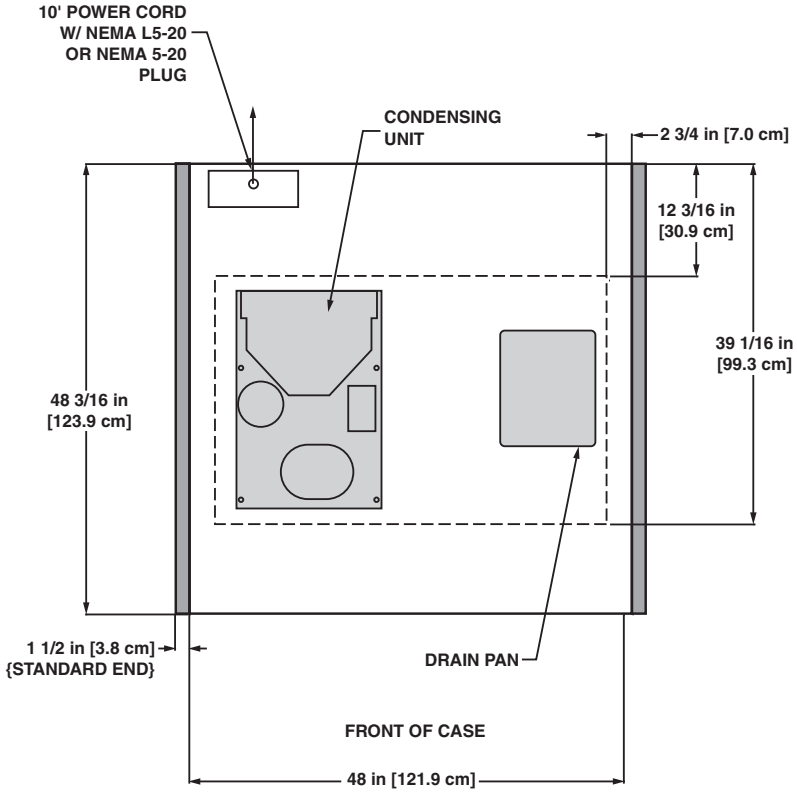

NOTES:

- ENDS ADD APPROXIMATELY 1 INCH TO CASE HEIGHT

International Style Self-Contained Mobile Sushi Prep Merchandiser

OSIOA-P-4'

System Data

Model	Volts	Phase	Hz	Plug Style	Cord Length
OSIOA-P	120	1	60	NEMA L5-30	10 ft

Guidelines & Control Settings

Model	24 hr Energy Usage (kWh)	Suction Pressure @ Case Outlet (psig)	Superheat Set Point @ Bulb (°F)	Discharge Air (°F)	Return Air (°F)	Discharge Air Velocity[1] (FPM)
OSIOA-P	32.0	12-14	6-8	26	34	182

[1] Average discharge air velocity at peak of defrost.

Condensing Unit Data

Model	Volts	Phase	Frequency (Hz)	HP	RLA[2] (amps)	LRA[3] (amps)	Refrig.	lbs of Refrig.
OSIOA-P	120	1	60	3/4	15.2	66.3	R134A	

[2] RLA - Running Load Amps.

[3] LRA - Locked Rotor Amps.

Defrost Controls

Model	Defrosts Per Day	Electric Defrost		Timed Off Defrost		Hot Gas Defrost		Reverse Air Defrost	
		Fail-safe (min)	Termination Temp. (°F)	Fail-safe (min)	Termination Temp. (°F)	Fail-safe (min)	Termination Temp. (°F)	Fail-safe (min)	Termination Temp. (°F)
OSIOA-P	2	40	47	- - -[4]	- - -	- - -	- - -	- - -	- - -

[4] NOTE: - - - not an option on this case model.

Medium Temperature Defrost Schedule

No. Per Day	Hours
1	12 midnight
2	12 am - 12 pm
3	6 am - 2 pm - 10 pm
4	12 - 6 am - 12 - 6 pm

All measurements are taken per ARI 1200 - 2002 specifications.

6/07

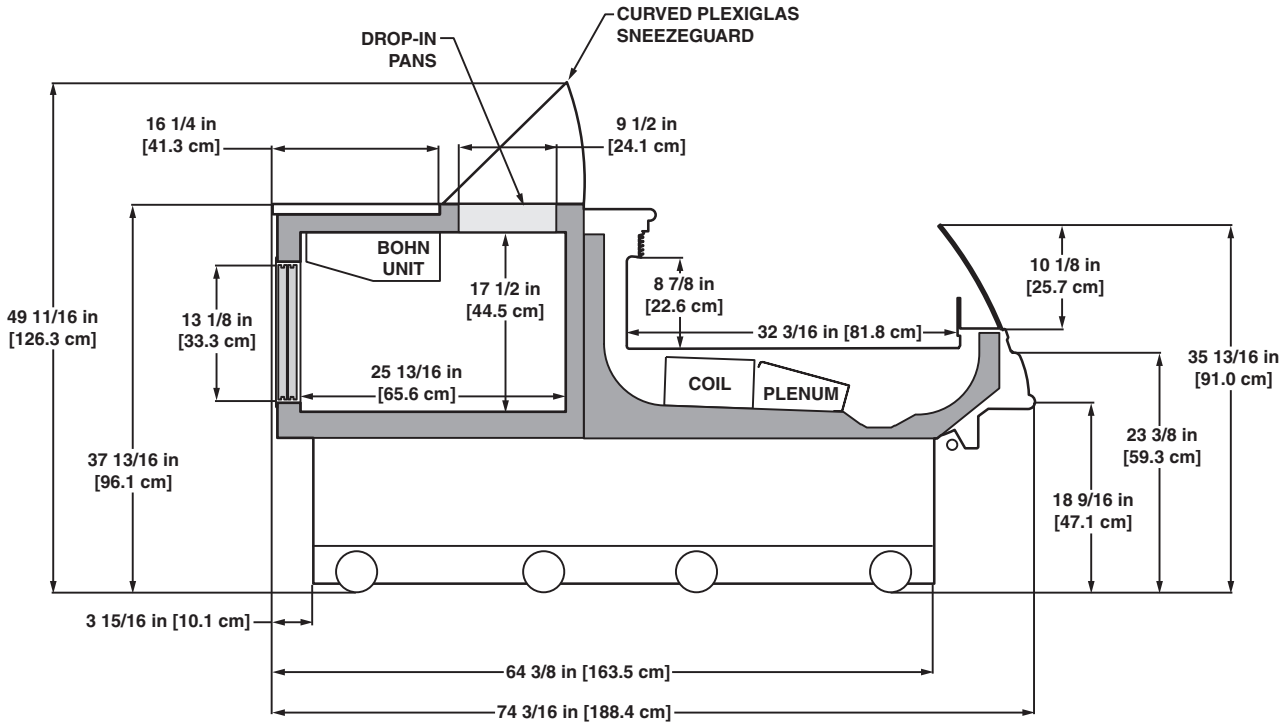
CURVED PLEXIGLAS SNEEZEGUARD
DROP-IN PANS
16 1/4 in [41.3 cm]
9 1/2 in [24.1 cm]
BOHN UNIT
17 1/2 in [44.5 cm]
8 7/8 in [22.6 cm]
10 1/8 in [25.7 cm]
49 11/16 in [126.3 cm]
13 1/8 in [33.3 cm]
32 3/16 in [81.8 cm]
35 13/16 in [91.0 cm]
25 13/16 in [65.6 cm]
COIL
PLENUM
23 3/8 in [59.3 cm]
37 13/16 in [96.1 cm]
18 9/16 in [47.1 cm]
3 15/16 in [10.1 cm]
64 3/8 in [163.5 cm]
74 3/16 in [188.4 cm]

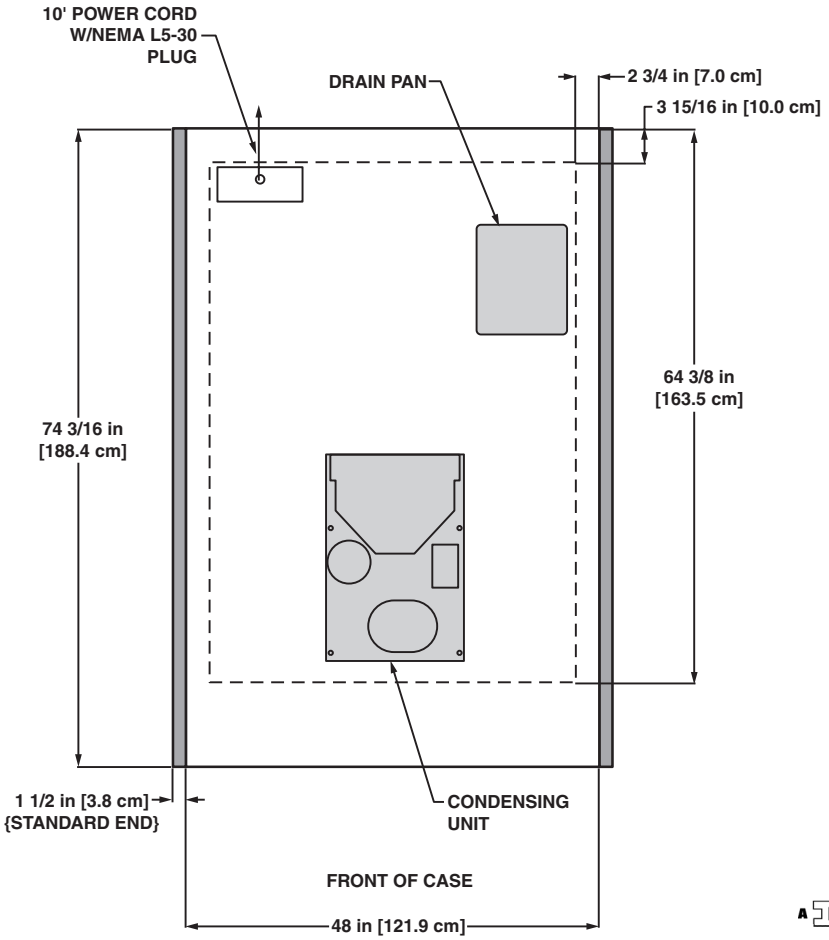
10' POWER CORD W/NEMA L5-30 PLUG
DRAIN PAN
2 3/4 in [7.0 cm]
3 15/16 in [10.0 cm]
64 3/8 in [163.5 cm]
74 3/16 in [188.4 cm]
1 1/2 in [3.8 cm] {STANDARD END}
CONDENSING UNIT
FRONT OF CASE
48 in [121.9 cm]

International Style Self-Contained Mobile Dual Temp. Merchandiser OSIOZA-4'

System Data

Model	Volts	Phase	Hz	Plug Style	Cord Length
OSIOZA	120	1	60	NEMA L5-30	10 ft

Guidelines & Control Settings

Model	24 hr Energy Usage (kWh)	Suction Pressure @ Case Outlet (psig)	Superheat Set Point @ Bulb (°F)	Discharge Air (°F)	Return Air (°F)	Discharge Air Velocity[1] (FPM)
OSIOZA	25.0	12-14	3-4	-24	-10	220

[1] Average discharge air velocity at peak of defrost.

Condensing Unit Data

Model	Volts	Phase	Frequency (Hz)	HP	RLA[2] (amps)	LRA[3] (amps)	Refrig.	lbs of Refrig.
OSIOZA	115	1	60	3/4	10.9	85.5	R404A	3.75

[2] RLA - Running Load Amps.

[3] LRA - Locked Rotor Amps.

Defrost Controls

Model		Electric Defrost		Timed Off Defrost		Hot Gas Defrost		Reverse Air Defrost	
	Defrosts Per Day	Fail-safe (min)	Termination Temp. (°F)	Fail-safe (min)	Termination Temp. (°F)	Fail-safe (min)	Termination Temp. (°F)	Fail-safe (min)	Termination Temp. (°F)
OSIOZA	2	45	45	- - -[4]	- - -	- - -	- - -	- - -	- - -

[4] NOTE: - - - not an option on this case model.

Low Temperature Defrost Schedule

No. Per Day	Hours
1	10 pm
2	6 am - 10 pm**

All measurements are taken per ARI 1200 - 2002 specifications.

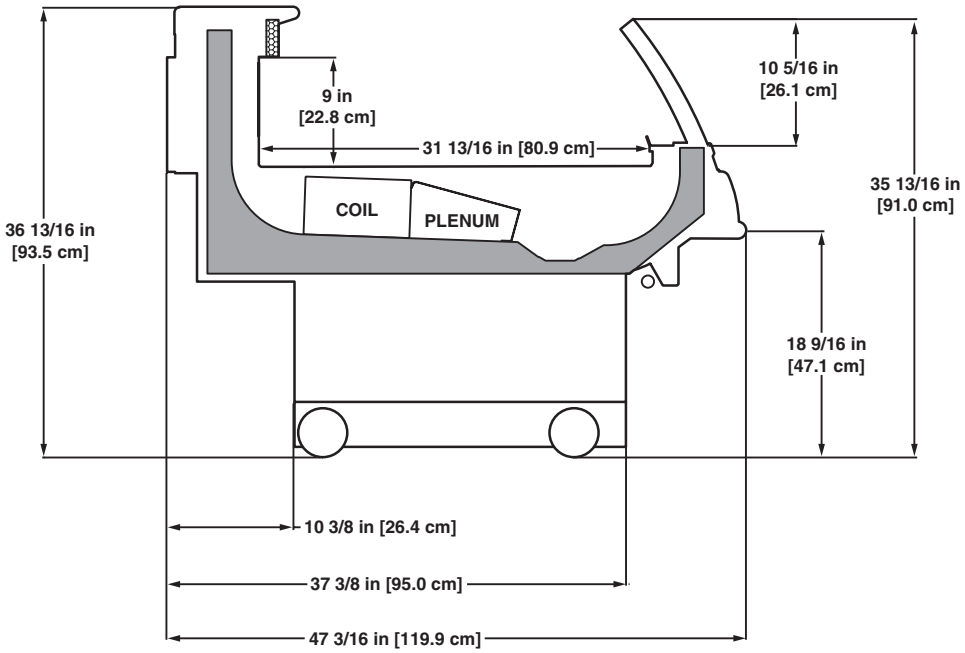

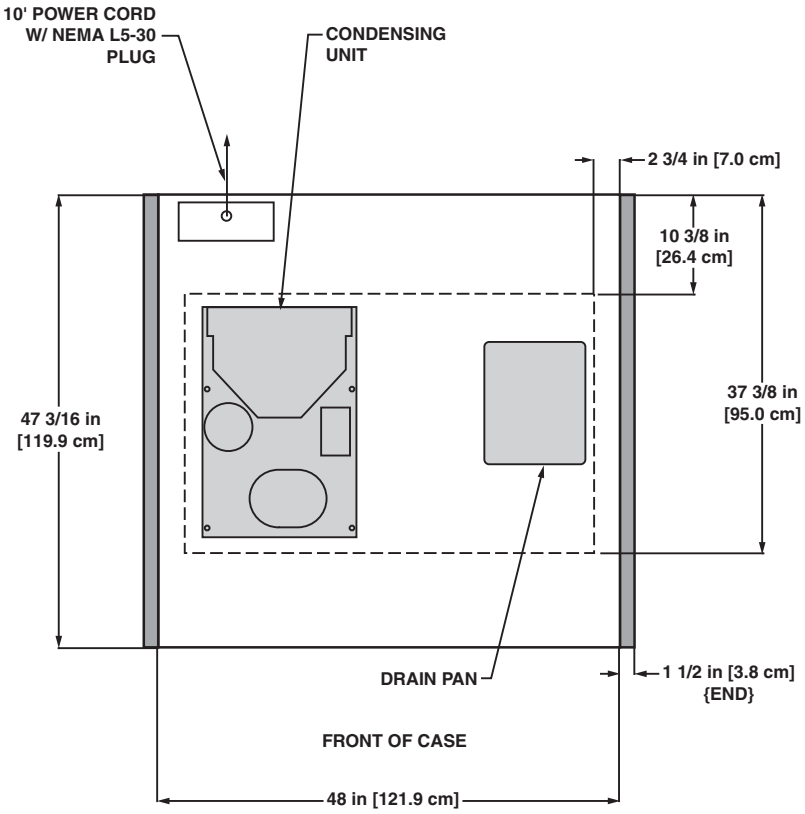

NOTES:

- ENDS ADD APPROXIMATELY 1 INCH TO CASE HEIGHT

Single Deck Self-Contained Mobile Boxed Produce Merchandiser

UPA-8′

System Data

Model	Volts	Phase	Hz	Plug Style	Cord Length
UPA	120	1	60	NEMA L5-30	6′

Guidelines & Control Settings

Model	24 hr Energy Usage (kWh)	Suction Pressure @ Case Outlet (psig)	Superheat Set Point @ Bulb (°F)	Discharge Air (°F)	Return Air (°F)	Discharge Air Velocity[1] (FPM)
UPA	37	20	6-8	32	42	200

[1] Average discharge air velocity at peak of defrost.

Condensing Unit Data

Model	Volts	Phase	Frequency (Hz)	HP	RLA[2] (amps)	LRA[3] (amps)	Refrig.	lbs of Refrig.
UPA	115	1	60	1/2	12.9	66.3	R134A	4.0

[2] RLA - Running Load Amps.

[3] LRA - Locked Rotor Amps.

Defrost Controls

		Electric Defrost		Timed Off Defrost		Hot Gas Defrost		Reverse Air Defrost	
Model	Defrosts Per Day	Fail-safe (min)	Termination Temp. (°F)	Fail-safe (min)	Termination Temp. (°F)	Fail-safe (min)	Termination Temp. (°F)	Fail-safe (min)	Termination Temp. (°F)
UPA	4	- - -[4]	- - -	45	47	- - -	- - -	- - -	- - -

[4] NOTE: - - - not an option on this case model.

Medium Temperature Defrost Schedule

No. Per Day	Hours
1	12 midnight
2	12 am - 12 pm
3	6 am - 2 pm - 10 pm
4	12 - 6 am - 12 - 6 pm

All measurements are taken per ARI 1200 - 2002 specifications.

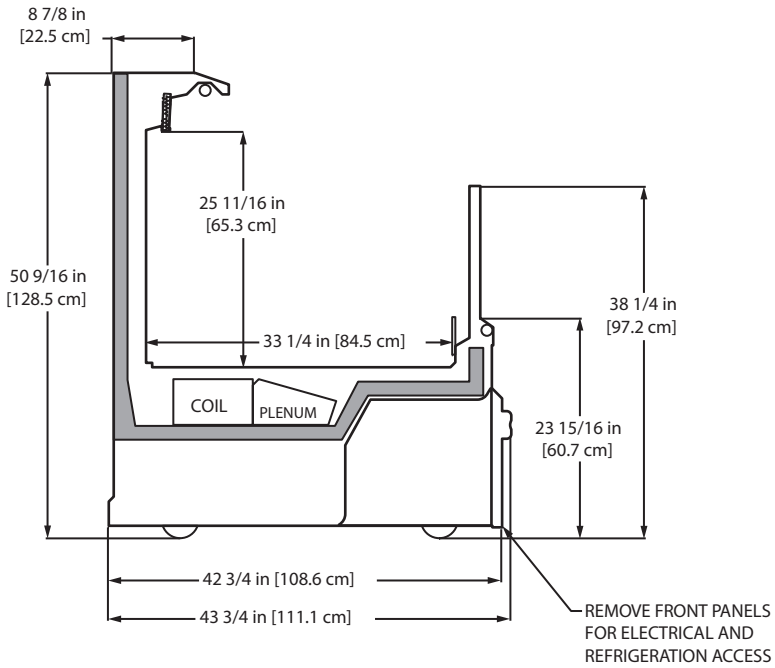

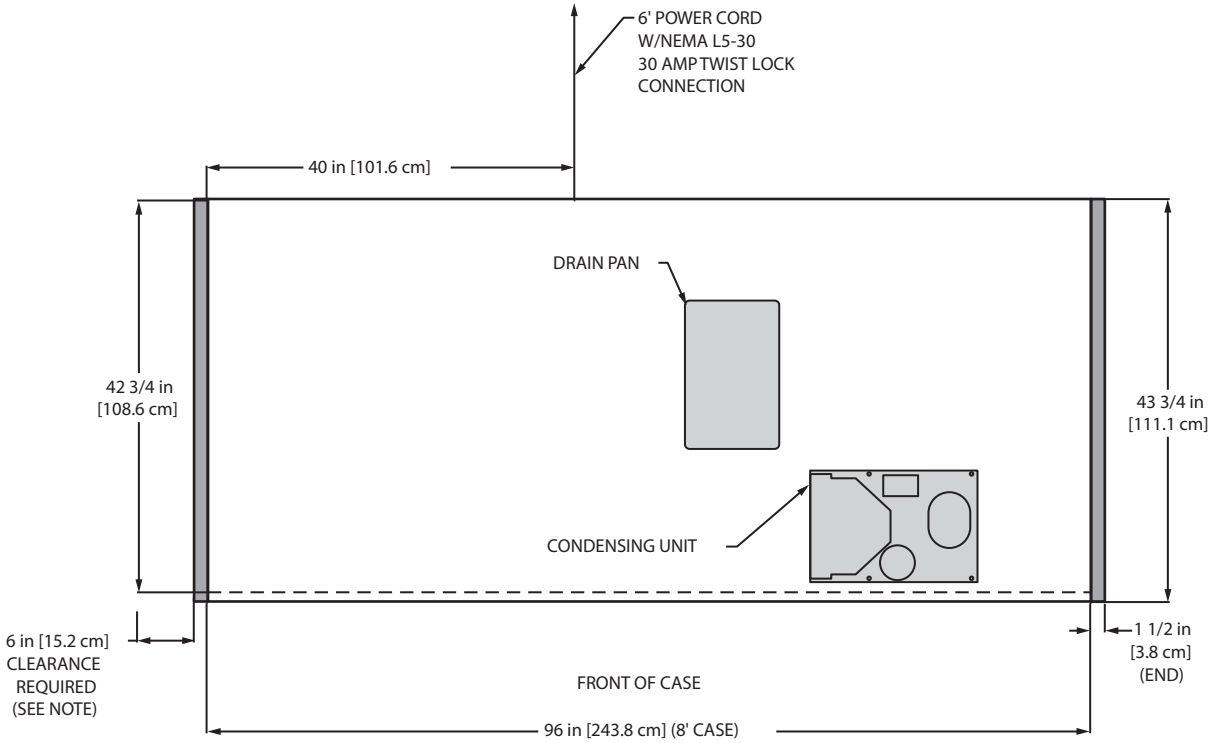

NOTES:

- CASE CLEARANCE: MINIMUM 6" FROM BOTH ENDS
- AVAILABLE SHELF SIZES: 10", 12", 14", & 16"

Multi-Deck Self-Contained Mobile Produce/Dairy/Deli/Meat Merchandiser

O2.5UMA - 4'

System Data

Model	Volts	Phase	Hz	Plug Style	Cord Length
O2.5UMA	120	1	60	NEMA L5-20 or NEMA 5-20	10 ft

Guidelines & Control Settings

Model	Front Sill	24 hr Energy Usage (kWh)	Suction Pressure @ Case Outlet (psig)	Superheat Set Point @ Bulb (°F)	Discharge Air (°F)	Return Air (°F)	Discharge Air Velocity[2] (FPM)
O2.5UMA Produce	Standard[1]	32.3	12-14	6-8	29-30	40-42	228
Deli	Solid/Extd.	30.2	12-14	6-8	25-27	39-41	230
Meat	Thermopane	30.3	12-14	6-8	25-26	36-38	226

[1] Note: when ordering the standard front a 4" piece of straight plexiglass must be placed in front of the return air baffle.

[2] Average discharge air velocity at peak of defrost.

Condensing Unit Data

Model	Volts	Phase	Frequency (Hz)	HP	RLA[3] (amps)	LRA[4] (amps)	Refrig.	lbs of Refrig.
O2.5UMA	115	1	60	1/2	12.9	66.3	R134A	3.6

[3] RLA - Running Load Amps.

[4] LRA - Locked Rotor Amps.

Defrost Controls

		Electric Defrost		Timed Off Defrost		Hot Gas Defrost		Reverse Air Defrost	
Model	Defrosts Per Day	Fail-safe (min)	Termination Temp. (°F)	Fail-safe (min)	Termination Temp. (°F)	Fail-safe (min)	Termination Temp. (°F)	Fail-safe (min)	Termination Temp. (°F)
O2.5UMA	3	40	47	- - -[5]	- - -	- - -	- - -	- - -	- - -

[5] NOTE: - - - not an option on this case model.

Medium Temperature Defrost Schedule

No. Per Day	Hours
1	12 midnight
2	12 am - 12 pm
3	6 am - 2 pm - 10 pm
4	12 - 6 am - 12 - 6 pm

All measurements are taken per ARI 1200 - 2002 specifications.

6/07

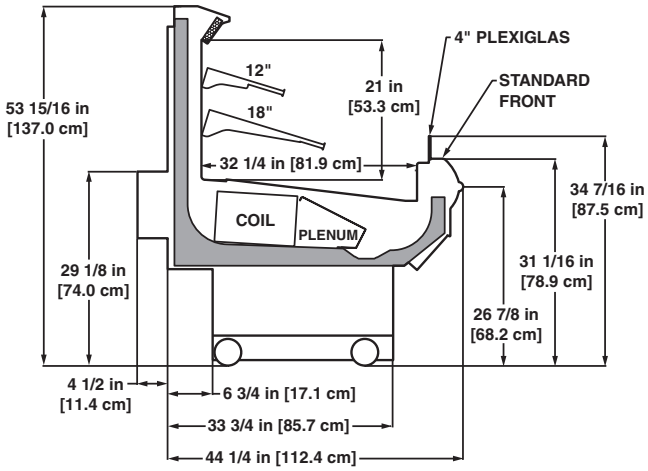

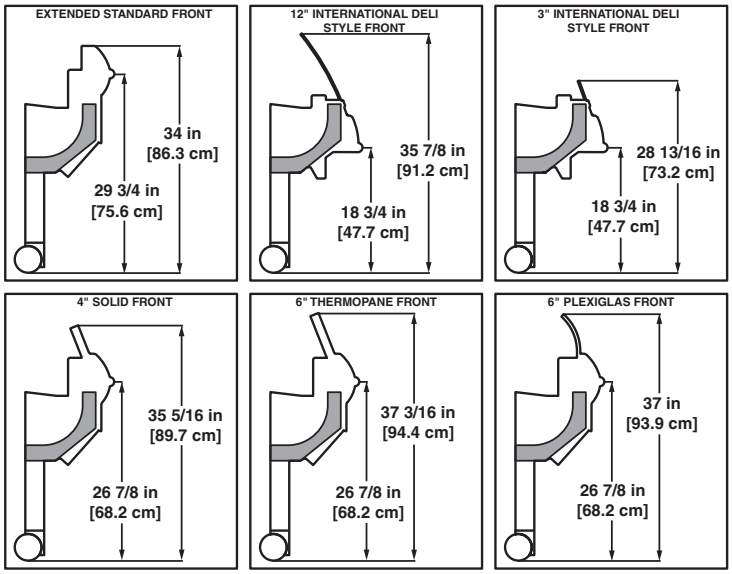

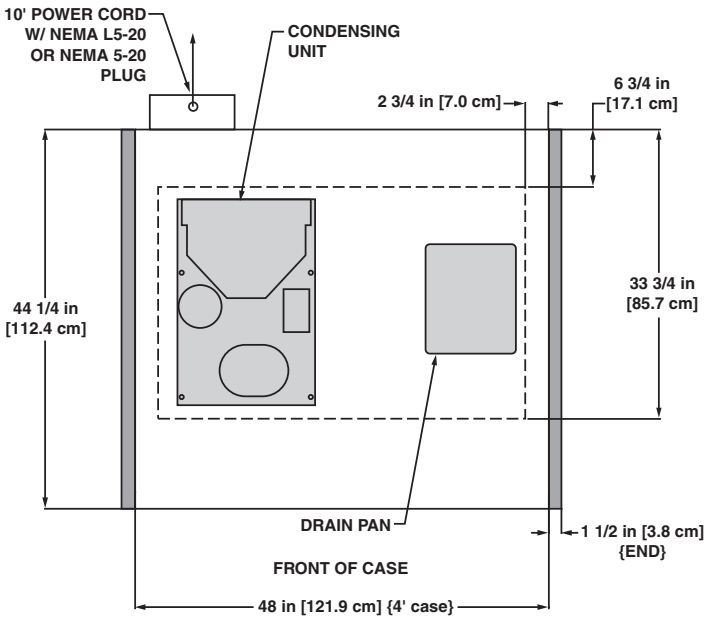

NOTES:
- ENDS ADD APPROXIMATELY 1 INCH TO CASE HEIGHT
- AVAILABLE SHELF SIZES: 10", 12", 14", 16" & 18"
- PRODUCT ON TOP SHELF SHOULD BE 3" BELOW DISCHARGE
- RECOMMENDED SHELF CONFIGURATION IN ROWS: 1-12" & 1-18"

Multi-Deck Self-Contained Mobile Produce/Dairy/Deli/Meat Merchandiser

O3UMA - 4'

System Data

Model	Volts	Phase	Hz	Plug Style	Cord Length
O3UMA	120	1	60	NEMA L5-20 or NEMA 5-20	10 ft

Guidelines & Control Settings

Model	Front Sill	24 hr Energy Usage (kWh)	Suction Pressure @ Case Outlet (psig)	Superheat Set Point @ Bulb (°F)	Discharge Air (°F)	Return Air (°F)	Discharge Air Velocity[1] (FPM)
O3UMA	Solid	32.1	12-14	6-8	26	35	230

[1] Average discharge air velocity at peak of defrost.

Condensing Unit Data

Model	Volts	Phase	Frequency (Hz)	HP	RLA[2] (amps)	LRA[3] (amps)	Refrig.	lbs of Refrig.
O3UMA	115	1	60	1/2	12.9	66.3	R134A	3.6

[2] RLA - Running Load Amps.

[3] LRA - Locked Rotor Amps.

Defrost Controls

		Electric Defrost		Timed Off Defrost		Hot Gas Defrost		Reverse Air Defrost	
Model	Defrosts Per Day	Fail-safe (min)	Termination Temp. (°F)	Fail-safe (min)	Termination Temp. (°F)	Fail-safe (min)	Termination Temp. (°F)	Fail-safe (min)	Termination Temp. (°F)
O3UMA	3	40	47	- - -[4]	- - -	- - -	- - -	- - -	- - -

[4] NOTE: - - - not an option on this case model.

Medium Temperature Defrost Schedule

No. Per Day	Hours
1	12 midnight
2	12 am - 12 pm
3	6 am - 2 pm - 10 pm
4	12 - 6 am - 12 - 6 pm

All measurements are taken per ARI 1200 - 2002 specifications.

6/07

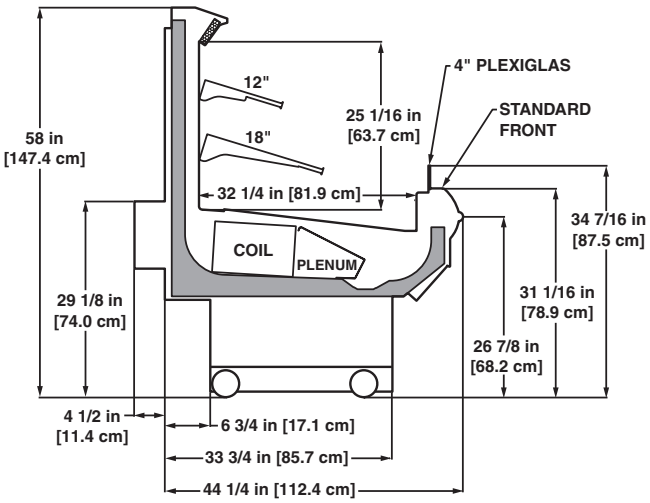

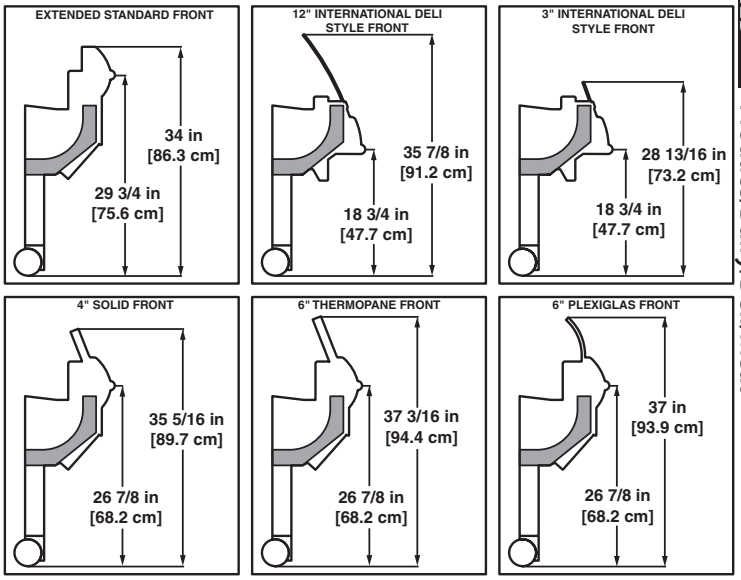

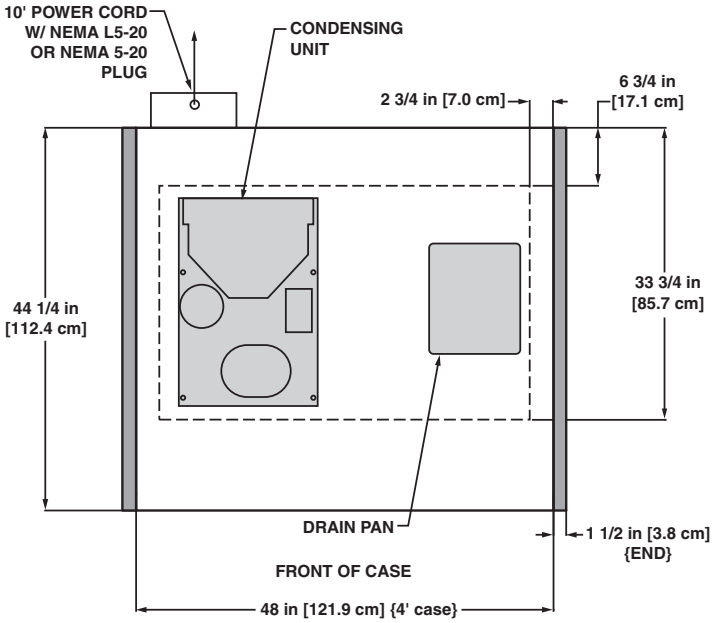

NOTES:
- ENDS ADD APPROXIMATELY 1 INCH TO CASE HEIGHT
- AVAILABLE SHELF SIZES: 10", 12", 14", 16" & 18"
- PRODUCT ON TOP SHELF SHOULD BE 3" BELOW DISCHARGE
- RECOMMENDED SHELF CONFIGURATION IN ROWS: 1-12" & 1-18"

Multi-Deck Self-Contained Mobile Produce/Dairy/Deli/Meat Merchandiser

O3UMA-56" - 4'

System Data

Model	Volts	Phase	Hz	Plug Style	Cord Length
O3UMA-56	120	1	60	NEMA L5-20 or NEMA 5-20	10 ft

Guidelines & Control Settings

Model	24 hr Energy Usage (kWh)	Suction Pressure @ Case Outlet (psig)	Superheat Set Point @ Bulb (°F)	Discharge Air (°F)	Return Air (°F)	Discharge Air Velocity[1] (FPM)
O3UMA-56	24.1	18-20	6-8	31	41	230

[1] Average discharge air velocity at peak of defrost.

Condensing Unit Data

Model	Volts	Phase	Frequency (Hz)	HP	RLA[2] (amps)	LRA[3] (amps)	Refrig.	lbs of Refrig.
O3UMA-56	115	1	60	1/2	10.2	51.0	R134A	2.84

[2] RLA - Running Load Amps.

[3] LRA - Locked Rotor Amps.

Defrost Controls

		Electric Defrost		Timed Off Defrost		Hot Gas Defrost		Reverse Air Defrost	
Model	Defrosts Per Day	Fail-safe (min)	Termination Temp. (°F)	Fail-safe (min)	Termination Temp. (°F)	Fail-safe (min)	Termination Temp. (°F)	Fail-safe (min)	Termination Temp. (°F)
O3UMA-56	6	40	47	- - -[4]	- - -	- - -	- - -	- - -	- - -

[4] NOTE: - - - not an option on this case model.

Medium Temperature Defrost Schedule

No. Per Day	Hours
1	12 midnight
2	12 am - 12 pm
3	6 am - 2 pm - 10 pm
4	12 - 6 am - 12 - 6 pm

All measurements are taken per ARI 1200 - 2002 specifications.

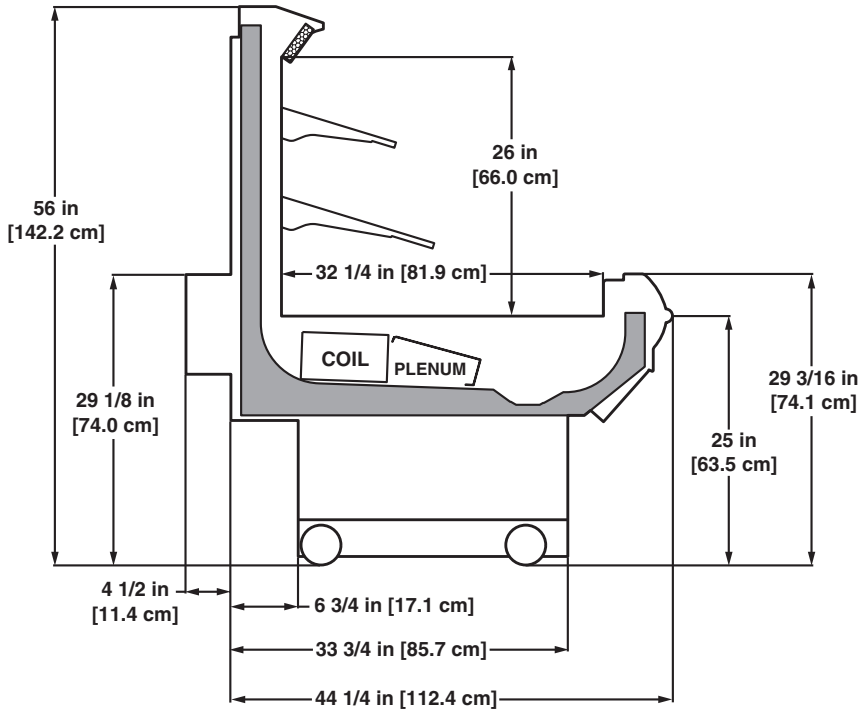

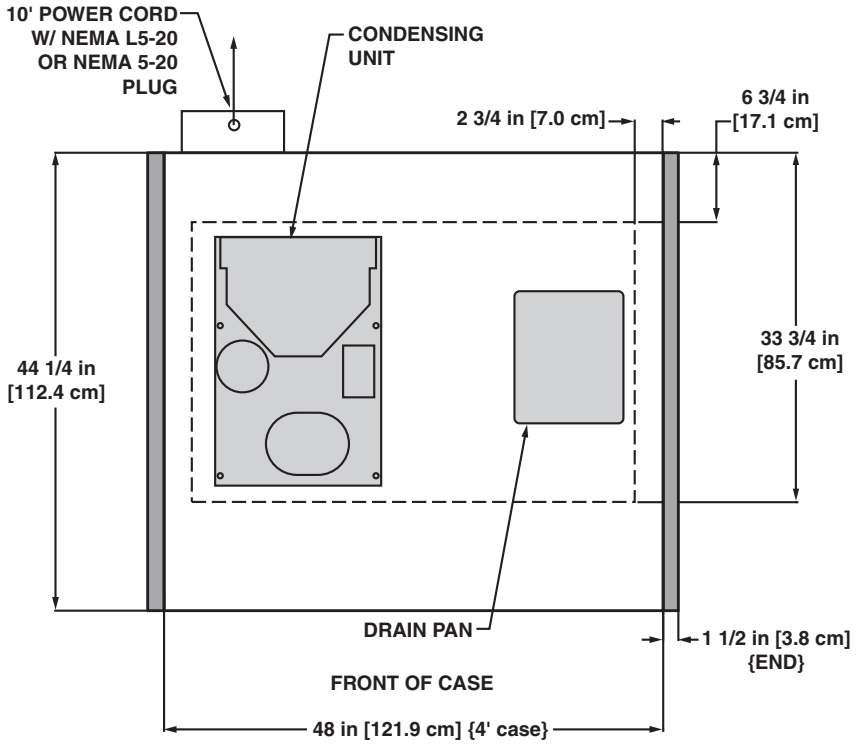

NOTE:
ENDS ADD APPROXIMATELY 1 INCH TO CASE HEIGHT

International Style Self-Contained Mobile Service Deli/Meat/Seafood Merchandiser

OSIA-4'

System Data

Model	Volts	Phase	Hz	Plug Style	Cord Length
OSIA	120	1	60	NEMA L5-20 or NEMA 5-20	10 ft

Guidelines & Control Settings

Model	24 hr Energy Usage (kWh)	Suction Pressure @ Case Outlet (psig)	Superheat Set Point @ Bulb (°F)	Discharge Air (°F)	Return Air (°F)	Discharge Air Velocity[1] (FPM)
OSIA		12-14	6-8	26	34	175

[1] Average discharge air velocity at peak of defrost.

Condensing Unit Data

Model	Volts	Phase	Frequency (Hz)	HP	RLA[2] (amps)	LRA[3] (amps)	Refrig.	lbs of Refrig.
OSIA	115	1	60	1/3	7.2	29.0	R134A	2.25

[2] RLA - Running Load Amps.

[3] LRA - Locked Rotor Amps.

Defrost Controls

Model	Defrosts Per Day	Electric Defrost		Timed Off Defrost		Hot Gas Defrost		Reverse Air Defrost	
		Fail-safe (min)	Termination Temp. (°F)	Fail-safe (min)	Termination Temp. (°F)	Fail-safe (min)	Termination Temp. (°F)	Fail-safe (min)	Termination Temp. (°F)
OSIA	2	45	47	- - -[4]	- - -	- - -	- - -	- - -	- - -

[4] NOTE: - - - not an option on this case model.

Medium Temperature Defrost Schedule

No. Per Day	Hours
1	12 midnight
2	12 am - 12 pm
3	6 am - 2 pm - 10 pm
4	12 - 6 am - 12 - 6 pm

All measurements are taken per ARI 1200 - 2002 specifications.

Hill PHOENIX EXCELLENCE

A DOVER COMPANY

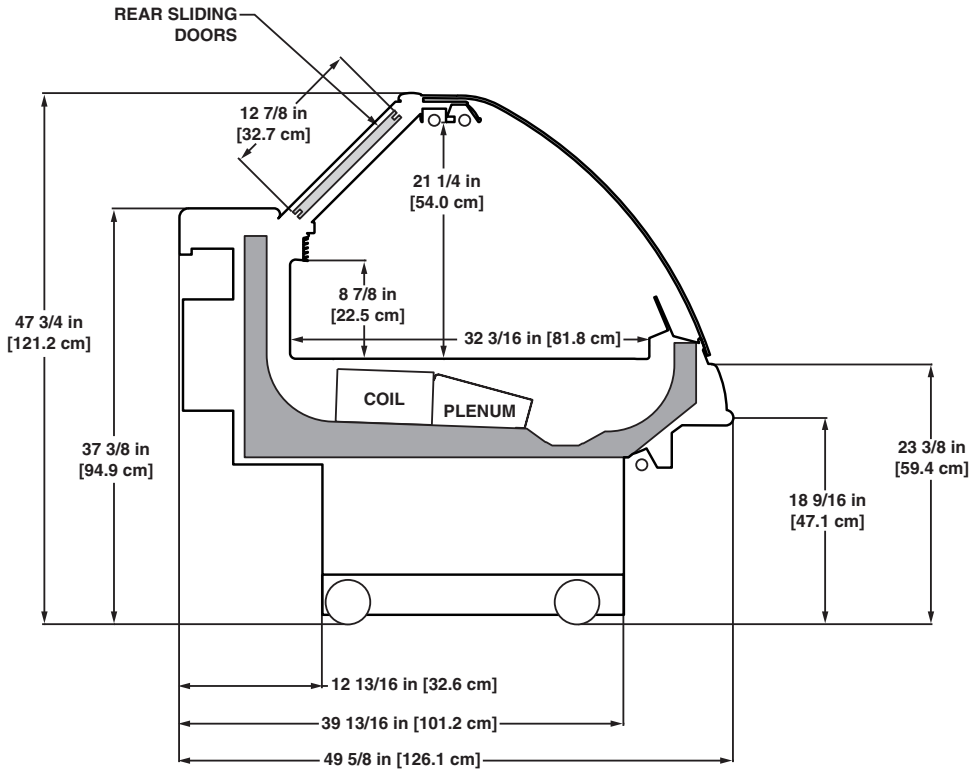

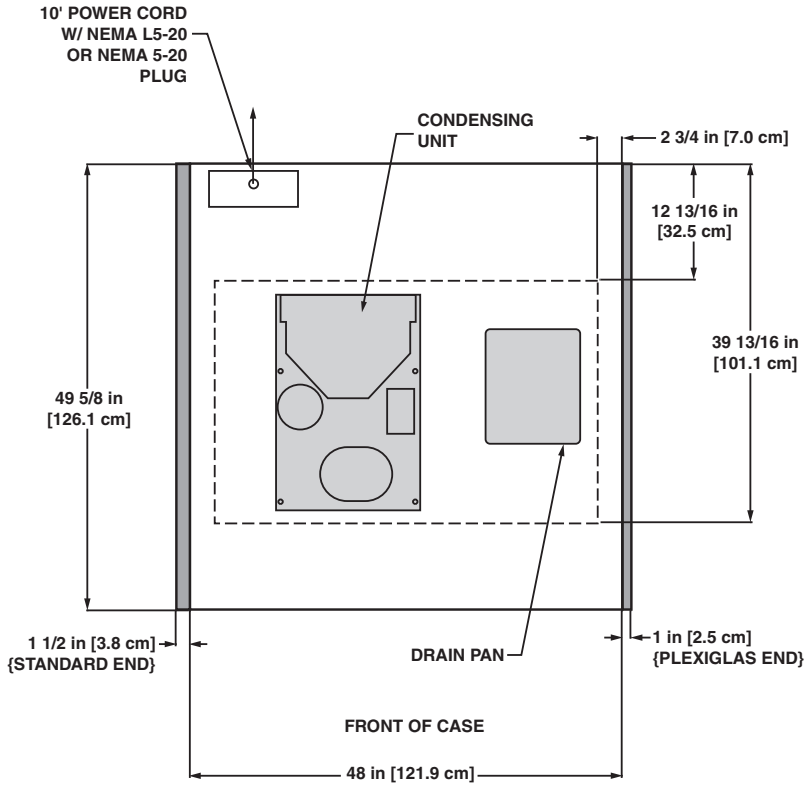

NOTES:

- ENDS ADD APPROXIMATELY 1 INCH TO CASE HEIGHT

International Style Self-Contained Mobile Service Deli/Meat/Seafood Merchandiser

O2SIA-4'

System Data

Model	Volts	Phase	Hz	Plug Style	Cord Length
O2SIA	120	1	60	NEMA L5-20 or NEMA 5-20	10 ft

Guidelines & Control Settings

Model	24 hr Energy Usage (kWh)	Suction Pressure @ Case Outlet (psig)	Superheat Set Point @ Bulb (°F)	Discharge Air (°F)	Return Air (°F)	Discharge Air Velocity[1] (FPM)
O2SIA	14.02	16	6-8	24	35	540

[1] Average discharge air velocity at peak of defrost.

Condensing Unit Data

Model	Volts	Phase	Frequency (Hz)	HP	RLA[2] (amps)	LRA[3] (amps)	Refrig.	lbs of Refrig.
O2SIA	115	1	60	1/3	7.2	29.0	R134A	2.25

[2] RLA - Running Load Amps.

[3] LRA - Locked Rotor Amps.

Defrost Controls

Model	Defrosts Per Day	Electric Defrost		Timed Off Defrost		Hot Gas Defrost		Reverse Air Defrost	
		Fail-safe (min)	Termination Temp. (°F)	Fail-safe (min)	Termination Temp. (°F)	Fail-safe (min)	Termination Temp. (°F)	Fail-safe (min)	Termination Temp. (°F)
O2SIA	3	45	50	- - -[4]	- - -	- - -	- - -	- - -	- - -

[4] NOTE: - - - not an option on this case model.

Medium Temperature Defrost Schedule

No. Per Day	Hours
1	12 midnight
2	12 am - 12 pm
3	6 am - 2 pm - 10 pm
4	12 - 6 am - 12 - 6 pm

All measurements are taken per ARI 1200 - 2002 specifications.

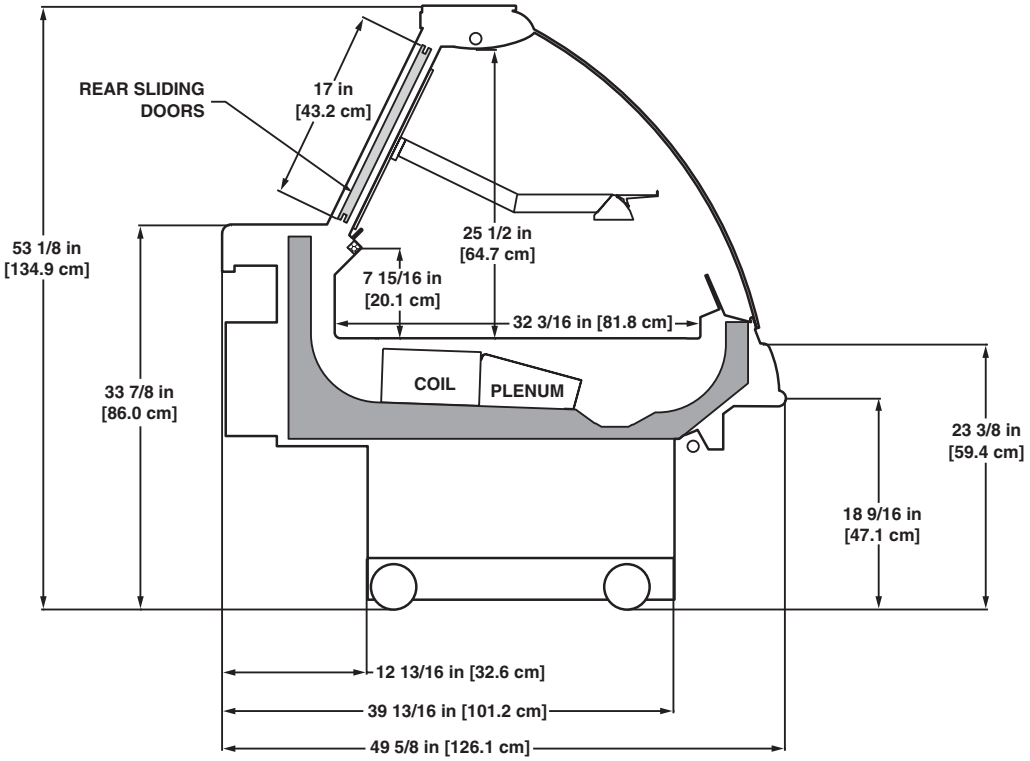

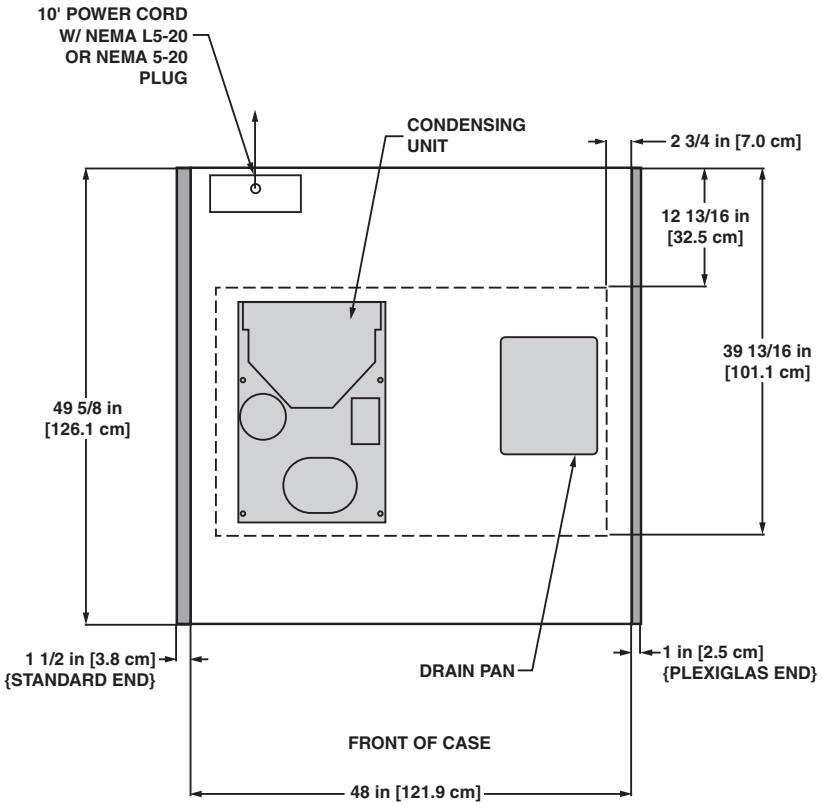

NOTES:

- ENDS ADD APPROXIMATELY 1 INCH TO CASE HEIGHT

CURVED CASES

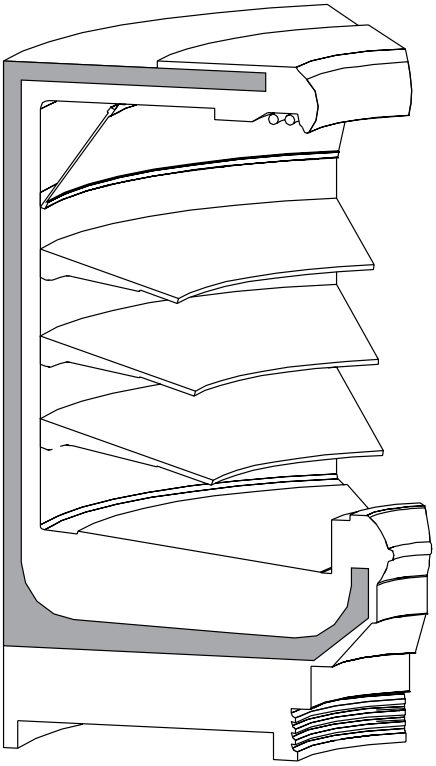

Curved Case Merchandisers

30°, 45°, 60°, & 90° Inside and Outside

HILL PHOENIX EXCELLENCE

Case Model	Wedge Model	Volume (ft³)	BTUH[1]	Suction Temp. (°F)	Fans per Case	Standard Fans 120 Volts Amps	Standard Fans 120 Volts Watts	High Efficiency Fans 120 Volts Amps	High Efficiency Fans 120 Volts Watts	Anti-Condensate Heaters 120 Volts Amps	Anti-Condensate Heaters 120 Volts Watts	Maximum Lighting 120 Volts Amps	Maximum Lighting 120 Volts Watts
OC	30° I/S	7.5	550	22	1	0.80	53	0.36	36	0.15	18	- - -	- - -
	45° I/S	11.3	820	22	1	0.80	53	0.36	36	0.21	25	- - -	- - -
	60° I/S	15.1	1090	22	1	0.80	53	0.36	36	0.26	31	- - -	- - -
	90° I/S	22.6	1630	22	2	1.60	107	0.72	71	0.39	47	- - -	- - -
	30° O/S	6.5	480	22	1	0.80	53	0.36	36	0.04	5	- - -	- - -
	45° O/S	9.8	710	22	1	0.80	53	0.36	36	0.05	6	- - -	- - -
	60° O/S	13.1	950	22	1	0.80	53	0.36	36	0.08	10	- - -	- - -
	90° O/S	19.6	1420	22	2	1.60	107	0.72	71	0.10	12	- - -	- - -

Case Model	Wedge Model	Volume (ft³)	BTUH[1]	Suction Temp. (°F)	Fans per Case	Standard Fans 120 Volts Amps	Standard Fans 120 Volts Watts	High Efficiency Fans 120 Volts Amps	High Efficiency Fans 120 Volts Watts	Anti-Condensate Heaters 120 Volts Amps	Anti-Condensate Heaters 120 Volts Watts	Maximum Lighting 120 Volts Amps	Maximum Lighting 120 Volts Watts
OM	30° I/S	6.6	570	22	1	0.80	53	0.36	36	0.15	18	0.75	90
	45° I/S	9.9	850	22	1	0.80	53	0.36	36	0.21	25	0.75	90
	60° I/S	13.3	1140	22	1	0.80	53	0.36	36	0.26	31	1.50	180
	90° I/S	19.9	1700	22	2	1.60	107	0.72	71	0.39	47	1.50	180
	30° O/S	6.1	530	22	1	0.80	53	0.36	36	0.04	5	0.75	90
	45° O/S	9.2	790	22	1	0.80	53	0.36	36	0.05	6	0.75	90
	60° O/S	12.2	1050	22	1	0.80	53	0.36	36	0.08	10	1.50	180
	90° O/S	18.3	1570	22	2	1.60	107	0.72	71	0.10	12	1.50	180

Case Model	Wedge Model	Volume (ft³)	BTUH[1]	Suction Temp. (°F)	Fans per Case	Standard Fans 120 Volts Amps	Standard Fans 120 Volts Watts	High Efficiency Fans 120 Volts Amps	High Efficiency Fans 120 Volts Watts	Anti-Condensate Heaters 120 Volts Amps	Anti-Condensate Heaters 120 Volts Watts	Maximum Lighting 120 Volts Amps	Maximum Lighting 120 Volts Watts
OP 39" Rear Sill	30° I/S	6.1	410	29	1	0.80	53	0.36	36	- - -	- - -	- - -	- - -
	45° I/S	6.2	620	29	1	0.80	53	0.36	36	- - -	- - -	- - -	- - -
	60° I/S	12.2	820	29	1	0.80	53	0.36	36	- - -	- - -	- - -	- - -
	90° I/S	18.4	1230	29	2	1.60	107	0.72	71	- - -	- - -	- - -	- - -
	30° O/S	5.4	360	29	1	0.80	53	0.36	36	- - -	- - -	- - -	- - -
	45° O/S	8.1	540	29	1	0.80	53	0.36	36	- - -	- - -	- - -	- - -
	60° O/S	10.8	720	29	1	0.80	53	0.36	36	- - -	- - -	- - -	- - -
	90° O/S	16.1	1080	29	2	1.60	107	0.72	71	- - -	- - -	- - -	- - -

Case Model	Wedge Model	Volume (ft³)	BTUH[1]	Suction Temp. (°F)	Fans per Case	Standard Fans 120 Volts Amps	Standard Fans 120 Volts Watts	High Efficiency Fans 120 Volts Amps	High Efficiency Fans 120 Volts Watts	Anti-Condensate Heaters 120 Volts Amps	Anti-Condensate Heaters 120 Volts Watts	Maximum Lighting 120 Volts Amps	Maximum Lighting 120 Volts Watts
OP 43" Rear Sill	30° I/S	7.0	580	29	1	0.80	53	0.36	36	- - -	- - -	- - -	- - -
	45° I/S	10.5	860	29	1	0.80	53	0.36	36	- - -	- - -	- - -	- - -
	60° I/S	14.0	1150	29	1	0.80	53	0.36	36	- - -	- - -	- - -	- - -
	90° I/S	21.0	1720	29	2	1.60	107	0.72	71	- - -	- - -	- - -	- - -
	30° O/S	5.8	480	29	1	0.80	53	0.36	36	- - -	- - -	- - -	- - -
	45° O/S	8.7	720	29	1	0.80	53	0.36	36	- - -	- - -	- - -	- - -
	60° O/S	11.6	950	29	1	0.80	53	0.36	36	- - -	- - -	- - -	- - -
	90° O/S	17.4	1430	29	2	1.60	107	0.72	71	- - -	- - -	- - -	- - -

[1] BTUHs listed are for parallel operation. Conventional ratings may be approximated by multiplying listed rating by 1.04.

A DOVER™ COMPANY

Case Model	Wedge Model	Volume (ft³)	BTUH[1]	Suction Temp. (°F)	Fans per Case	Standard Fans 120 Volts Amps	Standard Fans 120 Volts Watts	High Efficiency Fans 120 Volts Amps	High Efficiency Fans 120 Volts Watts	Anti-Condensate Heaters 120 Volts Amps	Anti-Condensate Heaters 120 Volts Watts	Maximum Lighting 120 Volts Amps	Maximum Lighting 120 Volts Watts
O2UM	30° I/S	7.8	1350	22	1	0.80	53	0.36	36	0.15[2]	18	1.55	186
	45° I/S	11.7	2030	22	1	0.80	53	0.36	36	0.21[2]	25	1.55	186
	60° I/S	15.6	2700	22	1	0.80	53	0.36	36	0.26[2]	31	1.90	288
	90° I/S	23.4	4050	22	2	1.60	107	0.72	71	0.39[2]	47	2.85	342
	30° O/S	6.5	1130	22	1	0.80	53	0.36	36	0.04[2]	5	1.55	186
	45° O/S	9.8	1690	22	1	0.80	53	0.36	36	0.05[2]	6	1.55	186
	60° O/S	13.0	2260	22	1	0.80	53	0.36	36	0.08[2]	10	1.90	288
	90° O/S	19.5	3380	22	2	1.60	107	0.72	71	0.10[2]	12	2.85	342

Case Model	Wedge Model	Volume (ft³)	BTUH[1]	Suction Temp. (°F)	Fans per Case	Standard Fans 120 Volts Amps	Standard Fans 120 Volts Watts	High Efficiency Fans 120 Volts Amps	High Efficiency Fans 120 Volts Watts	Anti-Condensate Heaters 120 Volts Amps	Anti-Condensate Heaters 120 Volts Watts	Maximum Lighting 120 Volts Amps	Maximum Lighting 120 Volts Watts
O2.5UM	30° I/S	8.4	1450	22	1	0.80	53	0.36	36	0.15[2]	18	2.35	282
	45° I/S	12.7	2170	22	1	0.80	53	0.36	36	0.21[2]	25	2.35	282
	60° I/S	16.9	2890	22	1	0.80	53	0.36	36	0.26[2]	31	2.55	306
	90° I/S	25.3	4340	22	2	1.60	107	0.72	71	0.39[2]	47	4.45	534
	30° O/S	6.9	1190	22	1	0.80	53	0.36	36	0.04[2]	5	2.35	282
	45° O/S	10.4	1780	22	1	0.80	53	0.36	36	0.05[2]	6	2.35	282
	60° O/S	13.8	2370	22	1	0.80	53	0.36	36	0.08[2]	10	2.55	306
	90° O/S	20.7	3550	22	2	1.60	107	0.72	71	0.10[2]	12	4.45	534

Case Model	Wedge Model	Volume (ft³)	BTUH[1]	Suction Temp. (°F)	Fans per Case	Standard Fans 120 Volts Amps	Standard Fans 120 Volts Watts	High Efficiency Fans 120 Volts Amps	High Efficiency Fans 120 Volts Watts	Anti-Condensate Heaters 120 Volts Amps	Anti-Condensate Heaters 120 Volts Watts	Maximum Lighting 120 Volts Amps	Maximum Lighting 120 Volts Watts
O3UM	30° I/S	9.3	1510	22	1	0.80	53	0.36	36	0.15[2]	18	2.35	282
	45° I/S	14.0	2260	22	1	0.80	53	0.36	36	0.21[2]	25	2.35	282
	60° I/S	18.7	3020	22	1	0.80	53	0.36	36	0.26[2]	31	2.55	306
	90° I/S	28.0	4520	22	2	1.60	107	0.72	71	0.39[2]	47	4.45	534
	30° O/S	7.5	1220	22	1	0.80	53	0.36	36	0.04[2]	5	2.35	282
	45° O/S	11.3	1830	22	1	0.80	53	0.36	36	0.05[2]	6	2.35	282
	60° O/S	15.1	2440	22	1	0.80	53	0.36	36	0.08[2]	10	2.55	306
	90° O/S	22.6	3650	22	2	1.60	107	0.72	71	0.10[2]	12	4.45	534

Case Model	Wedge Model	Volume (ft³)	BTUH[1]	Suction Temp. (°F)	Fans per Case	Standard Fans 120 Volts Amps	Standard Fans 120 Volts Watts	High Efficiency Fans 120 Volts Amps	High Efficiency Fans 120 Volts Watts	Anti-Condensate Heaters 120 Volts Amps	Anti-Condensate Heaters 120 Volts Watts	Maximum Lighting 120 Volts Amps	Maximum Lighting 120 Volts Watts
O3.5UM	30° I/S	10.4	1880	22	1	0.80	53	0.36	36	0.15[2]	18	3.15	378
	45° I/S	15.7	2820	22	1	0.80	53	0.36	36	0.21[2]	25	3.15	378
	60° I/S	20.9	3760	22	1	0.80	53	0.36	36	0.26[2]	31	3.20	384
	90° I/S	31.3	5640	22	2	1.60	107	0.72	71	0.39[2]	47	6.05	726
	30° O/S	8.2	1480	22	1	0.80	53	0.36	36	0.04[2]	5	3.15	378
	45° O/S	12.3	2210	22	1	0.80	53	0.36	36	0.05[2]	6	3.15	378
	60° O/S	16.4	2950	22	1	0.80	53	0.36	36	0.08[2]	10	3.20	384
	90° O/S	24.6	4420	22	2	1.60	107	0.72	71	0.10[2]	12	6.05	726

[1] BTUHs listed are for parallel operation. Conventional ratings may be approximated by multiplying listed rating by 1.04.

[2] Anti-condensate heater data for unlighted rear sill. For lighted rear sill, double the values.

Curved Case Merchandisers

30°, 45°, 60°, & 90° Inside and Outside

Case Model	Wedge Model	Volume (ft³)	BTUH[1]	Suction Temp. (°F)	Fans per Case	Standard Fans 120 Volts Amps	Standard Fans 120 Volts Watts	High Efficiency Fans 120 Volts Amps	High Efficiency Fans 120 Volts Watts	Anti-Condensate Heaters 120 Volts Amps	Anti-Condensate Heaters 120 Volts Watts	Maximum Lighting 120 Volts Amps	Maximum Lighting 120 Volts Watts
O4UM	30° I/S	12.1	2040	22	1	0.80	53	0.36	36	0.15[2]	18	3.15	378
	45° I/S	18.2	3060	22	1	0.80	53	0.36	36	0.21[2]	25	3.15	378
	60° I/S	24.3	4080	22	1	0.80	53	0.36	36	0.26[2]	31	3.20	384
	90° I/S	36.4	6120	22	2	1.60	107	0.72	71	0.39[2]	47	6.05	726
	30° O/S	9.4	1580	22	1	0.80	53	0.36	36	0.04[2]	5	3.15	378
	45° O/S	14.0	2360	22	1	0.80	53	0.36	36	0.05[2]	6	3.15	378
	60° O/S	18.7	3150	22	1	0.80	53	0.36	36	0.08[2]	10	3.20	384
	90° O/S	28.1	4720	22	2	1.60	107	0.72	71	0.10[2]	12	6.05	726

Case Model	Wedge Model	Volume (ft³)	BTUH[1]	Suction Temp. (°F)	Fans per Case	Standard Fans 120 Volts Amps	Standard Fans 120 Volts Watts	High Efficiency Fans 120 Volts Amps	High Efficiency Fans 120 Volts Watts	Anti-Condensate Heaters 120 Volts Amps	Anti-Condensate Heaters 120 Volts Watts	Maximum Lighting 120 Volts Amps	Maximum Lighting 120 Volts Watts
O5UM	30° I/S	13.2	2090	22	1	0.80	53	0.36	36	0.15[2]	18	3.95	474
	45° I/S	19.8	3130	22	1	0.80	53	0.36	36	0.21[2]	25	3.95	474
	60° I/S	26.3	4170	22	1	0.80	53	0.36	36	0.26[2]	31	3.85	462
	90° I/S	39.5	6260	22	2	1.60	107	0.72	71	0.39[2]	47	7.65	918
	30° O/S	10.1	1600	22	1	0.80	53	0.36	36	0.04[2]	5	3.95	474
	45° O/S	15.1	2390	22	1	0.80	53	0.36	36	0.05[2]	6	3.95	474
	60° O/S	20.1	3190	22	1	0.80	53	0.36	36	0.08[2]	10	3.85	462
	90° O/S	30.2	4780	22	2	1.60	107	0.72	71	0.10[2]	12	7.65	918

Case Model	Wedge Model	Volume (ft³)	BTUH[1]	Suction Temp. (°F)	Fans per Case	Standard Fans 120 Volts Amps	Standard Fans 120 Volts Watts	High Efficiency Fans 120 Volts Amps	High Efficiency Fans 120 Volts Watts	Anti-Condensate Heaters 120 Volts Amps	Anti-Condensate Heaters 120 Volts Watts	Maximum Lighting 120 Volts Amps	Maximum Lighting 120 Volts Watts
O5DM Deli	30° I/S	21.3	2020	22	1	0.80	53	0.36	36	- - -	- - -	5.00	600
	45° I/S	32.0	3030	22	1	0.80	53	0.36	36	- - -	- - -	5.00	600
	60° I/S	42.6	4030	22	1	0.80	53	0.36	36	- - -	- - -	5.25	630
	90° I/S	64.0	6050	22	2	1.60	107	0.72	71	- - -	- - -	10.00	1200
	30° O/S	20.5	1940	22	1	0.80	53	0.36	36	- - -	- - -	5.00	600
	45° O/S	30.8	2910	22	1	0.80	53	0.36	36	- - -	- - -	5.00	600
	60° O/S	41.0	3880	22	1	0.80	53	0.36	36	- - -	- - -	5.25	630
	90° O/S	61.5	5820	22	2	1.60	107	0.72	71	- - -	- - -	10.00	1200

Case Model	Wedge Model	Volume (ft³)	BTUH[1]	Suction Temp. (°F)	Fans per Case	Standard Fans 120 Volts Amps	Standard Fans 120 Volts Watts	High Efficiency Fans 120 Volts Amps	High Efficiency Fans 120 Volts Watts	Anti-Condensate Heaters 120 Volts Amps	Anti-Condensate Heaters 120 Volts Watts	Maximum Lighting 120 Volts Amps	Maximum Lighting 120 Volts Watts
O5DM Dairy	30° I/S	21.3	1890	26	1	0.80	53	0.36	36	- - -	- - -	5.00	600
	45° I/S	32.0	2840	26	1	0.80	53	0.36	36	- - -	- - -	5.00	600
	60° I/S	42.6	3780	26	1	0.80	53	0.36	36	- - -	- - -	5.25	630
	90° I/S	64.0	5670	26	2	1.60	107	0.72	71	- - -	- - -	10.00	1200
	30° O/S	20.5	1820	26	1	0.80	53	0.36	36	- - -	- - -	5.00	600
	45° O/S	30.8	2730	26	1	0.80	53	0.36	36	- - -	- - -	5.00	600
	60° O/S	41.0	3640	26	1	0.80	53	0.36	36	- - -	- - -	5.25	630
	90° O/S	61.5	5460	26	2	1.60	107	0.72	71	- - -	- - -	10.00	1200

[1] BTUHs listed are for parallel operation. Conventional ratings may be approximated by multiplying listed rating by 1.04.

[2] Anti-condensate heater data for unlighted rear sill. For lighted rear sill, double the values.

Case Model	Wedge Model	Volume (ft³)	BTUH[1]	Suction Temp. (°F)	Fans per Case	Standard Fans 120 Volts Amps	Standard Fans 120 Volts Watts	High Efficiency Fans 120 Volts Amps	High Efficiency Fans 120 Volts Watts	Anti-Condensate Heaters 120 Volts Amps	Anti-Condensate Heaters 120 Volts Watts	Maximum Lighting 120 Volts Amps	Maximum Lighting 120 Volts Watts
OHM	30° I/S	17.3	1780	22	1	0.80	53	0.36	36	0.04	5	3.95	474
	45° I/S	26.0	2660	22	1	0.80	53	0.36	36	0.10	12	3.95	474
	60° I/S	34.6	3550	22	1	0.80	53	0.36	36	0.34	41	4.10	492
	90° I/S	52.0	5320	22	2	1.60	107	0.72	71	0.32	38	7.90	948
	30° O/S	16.2	1660	22	1	0.80	53	0.36	36	0.10	12	3.95	474
	45° O/S	24.2	2480	22	1	0.80	53	0.36	36	0.14	17	3.95	474
	60° O/S	32.3	3310	22	1	0.80	53	0.36	36	0.18	22	4.10	492
	90° O/S	48.5	4960	22	2	1.60	107	0.72	71	0.28	34	7.90	948

Case Model	Wedge Model	Volume (ft³)	BTUH[1]	Suction Temp. (°F)	Fans per Case	Standard Fans 120 Volts Amps	Standard Fans 120 Volts Watts	High Efficiency Fans 120 Volts Amps	High Efficiency Fans 120 Volts Watts	Anti-Condensate Heaters 120 Volts Amps	Anti-Condensate Heaters 120 Volts Watts	Maximum Lighting 120 Volts Amps	Maximum Lighting 120 Volts Watts
OHMH	30° I/S	18.3	1980	22	1	0.80	53	0.36	36	0.08	10	4.75	570
	45° I/S	27.4	2970	22	1	0.80	53	0.36	36	0.20	24	4.75	570
	60° I/S	36.6	3960	22	1	0.80	53	0.36	36	0.68	82	4.75	570
	90° I/S	54.9	5940	22	2	1.60	107	0.72	71	0.64	77	9.50	1140
	30° O/S	15.9	1730	22	1	0.80	53	0.36	36	0.20	24	4.75	570
	45° O/S	23.9	2590	22	1	0.80	53	0.36	36	0.28	34	4.75	570
	60° O/S	31.8	3450	22	1	0.80	53	0.36	36	0.36	44	4.75	570
	90° O/S	47.8	5170	22	2	1.60	107	0.72	71	0.56	68	9.50	1140

Case Model	Wedge Model	Volume (ft³)	BTUH[1]	Suction Temp. (°F)	Fans per Case	Standard Fans 120 Volts Amps	Standard Fans 120 Volts Watts	High Efficiency Fans 120 Volts Amps	High Efficiency Fans 120 Volts Watts	Anti-Condensate Heaters 120 Volts Amps	Anti-Condensate Heaters 120 Volts Watts	Maximum Lighting 120 Volts Amps	Maximum Lighting 120 Volts Watts
OHP	30° I/S	17.2	1650	26	1	0.80	53	0.36	36	- - -	- - -	3.95	474
	45° I/S	25.8	2470	26	1	0.80	53	0.36	36	- - -	- - -	3.95	474
	60° I/S	34.4	3300	26	1	0.80	53	0.36	36	- - -	- - -	4.10	492
	90° I/S	51.6	4940	26	2	1.60	107	0.72	71	- - -	- - -	7.90	948
	30° O/S	16.1	1550	26	1	0.80	53	0.36	36	- - -	- - -	3.95	474
	45° O/S	24.2	2320	26	1	0.80	53	0.36	36	- - -	- - -	3.95	474
	60° O/S	32.3	3090	26	1	0.80	53	0.36	36	- - -	- - -	4.10	492
	90° O/S	48.4	4640	26	2	1.60	107	0.72	71	- - -	- - -	7.90	948

Case Model	Wedge Model	Volume (ft³)	BTUH[1]	Suction Temp. (°F)	Fans per Case	Standard Fans 120 Volts Amps	Standard Fans 120 Volts Watts	High Efficiency Fans 120 Volts Amps	High Efficiency Fans 120 Volts Watts	Anti-Condensate Heaters 120 Volts Amps	Anti-Condensate Heaters 120 Volts Watts	Maximum Lighting 120 Volts Amps	Maximum Lighting 120 Volts Watts
OHPH	30° I/S	18.3	1860	26	1	0.80	53	0.36	36	0.04	5	4.75	570
	45° I/S	27.5	2790	26	1	0.80	53	0.36	36	0.10	12	4.75	570
	60° I/S	36.7	3720	26	1	0.80	53	0.36	36	0.34	41	4.75	570
	90° I/S	55.0	5580	26	2	1.60	107	0.72	71	0.32	38	9.50	1140
	30° O/S	15.8	1610	26	1	0.80	53	0.36	36	0.10	12	4.75	570
	45° O/S	23.7	2410	26	1	0.80	53	0.36	36	0.14	17	4.75	570
	60° O/S	31.6	3210	26	1	0.80	53	0.36	36	0.18	22	4.75	570
	90° O/S	47.4	4810	26	2	1.60	107	0.72	71	0.28	34	9.50	1140

[1] BTUHs listed are for parallel operation. Conventional ratings may be approximated by multiplying listed rating by 1.04.

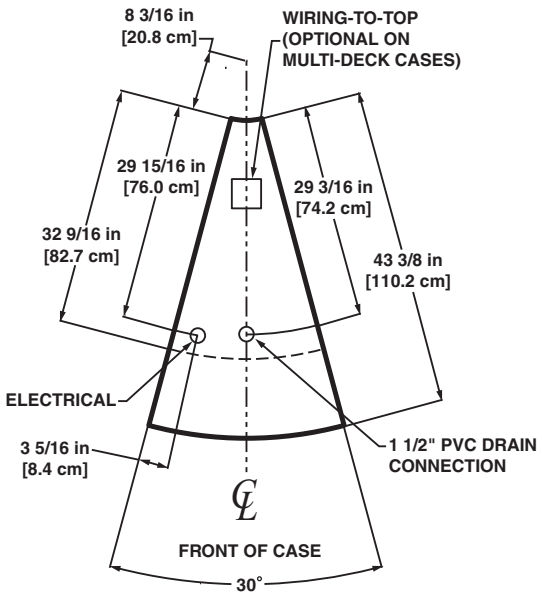

30° OUTSIDE
(11" BASEFRAME)

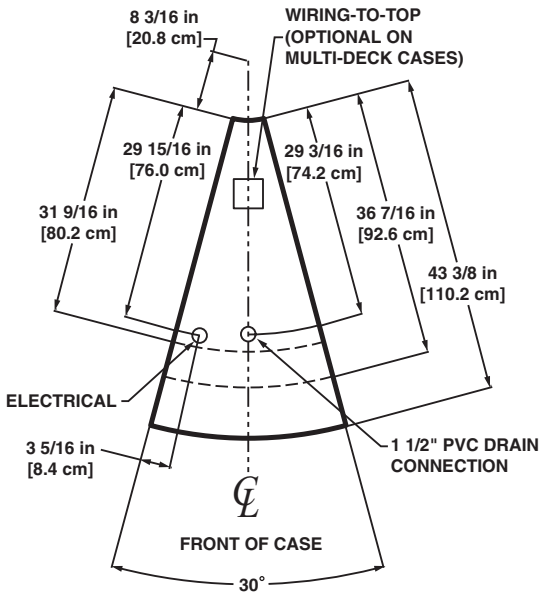

30° OUTSIDE
(5" BASEFRAME)

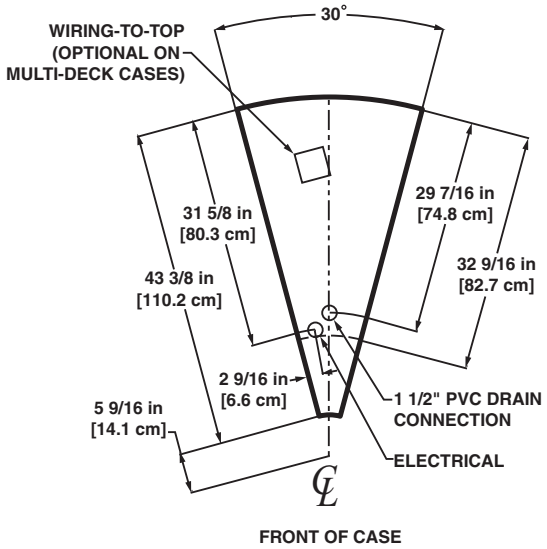

30° INSIDE
(11" BASEFRAME)

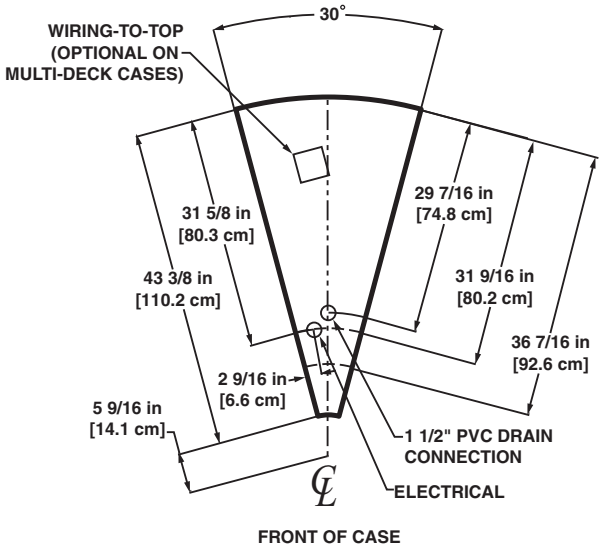

30° INSIDE
(5" BASEFRAME)

NOTE: Curved case cross-sections are the same as the standard model

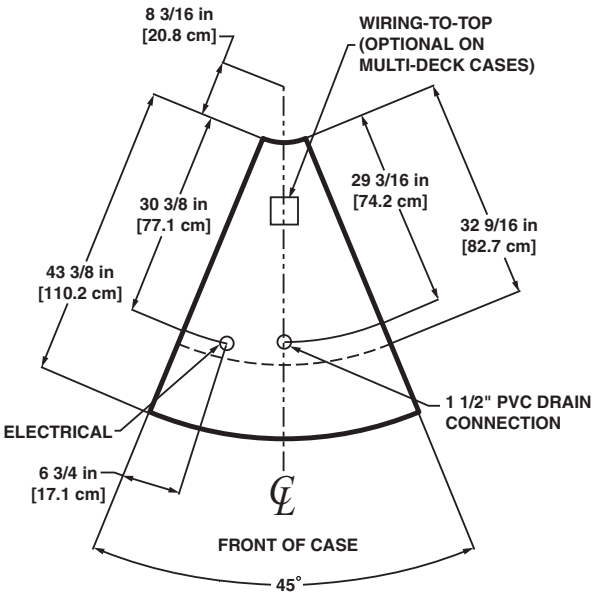

45° OUTSIDE
(11" BASEFRAME)

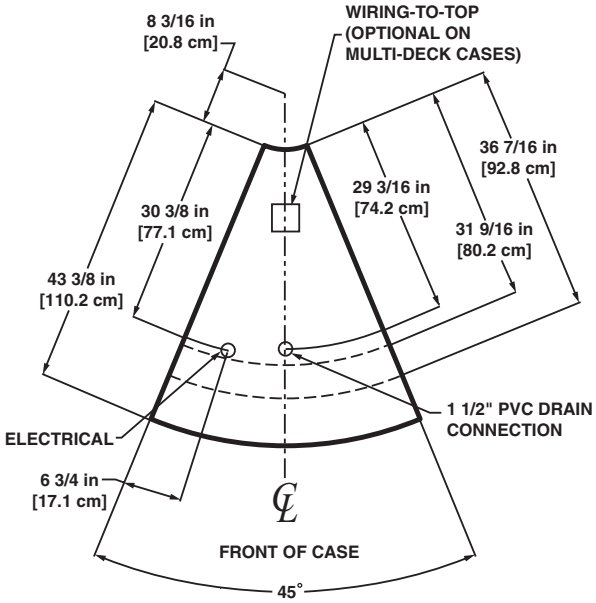

45° OUTSIDE
(5" BASEFRAME)

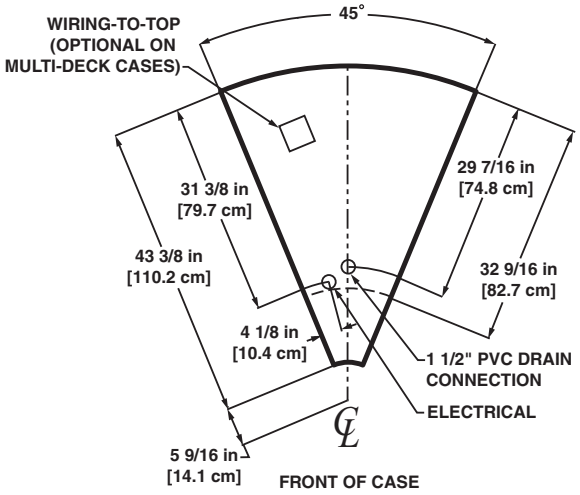

45° INSIDE
(11" BASEFRAME)

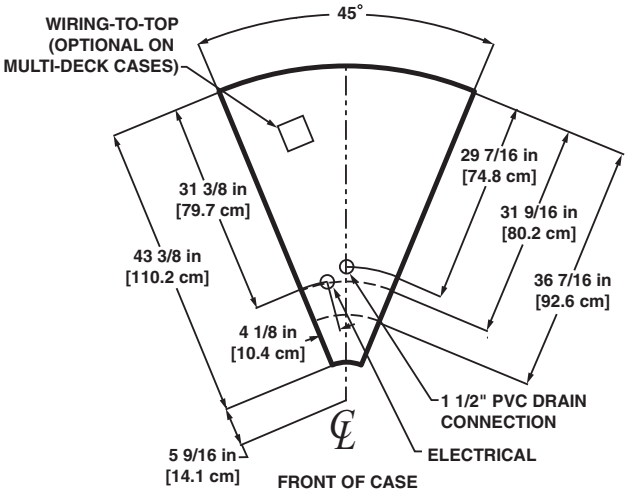

45° INSIDE
(5" BASEFRAME)

NOTE: Curved case cross-sections are the same as the standard model

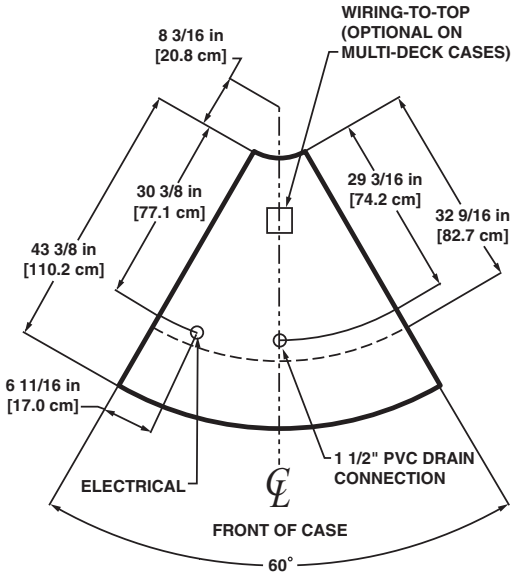

60° OUTSIDE
(11" BASEFRAME)

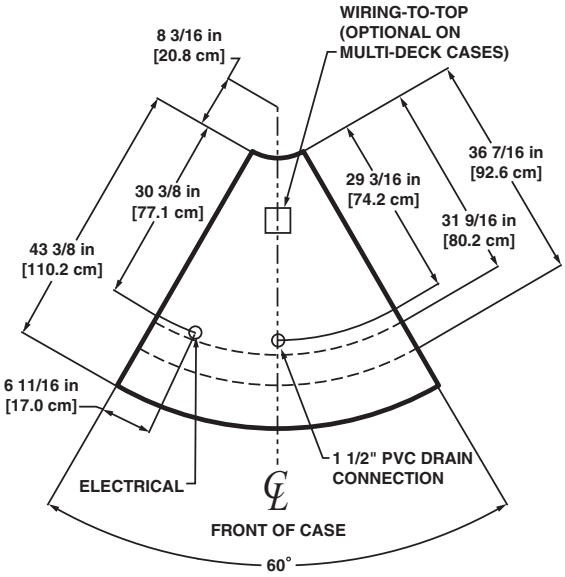

60° OUTSIDE
(5" BASEFRAME)

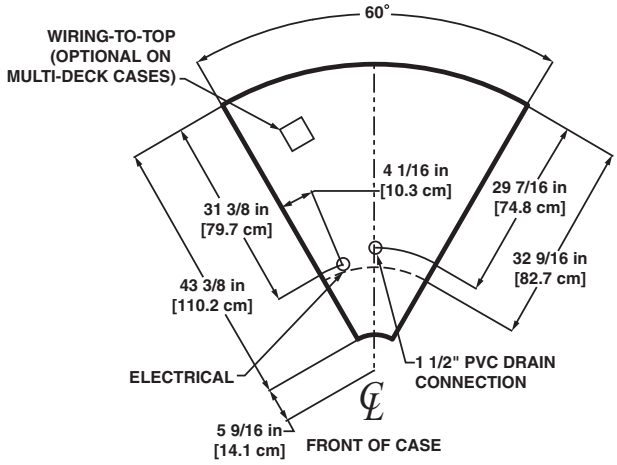

60° INSIDE
(11" BASEFRAME)

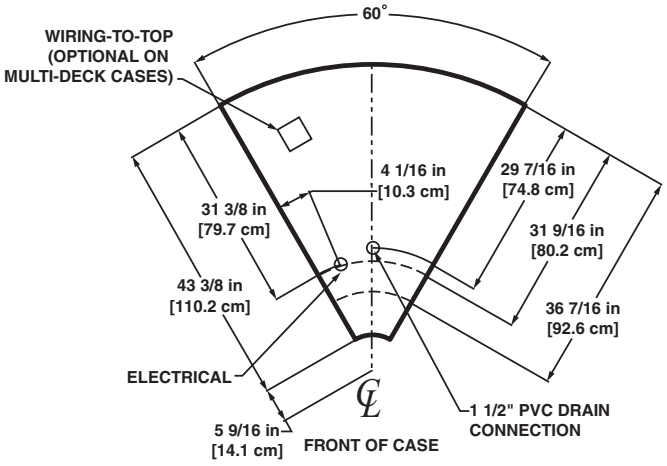

60° INSIDE
(5" BASEFRAME)

NOTE: Curved case cross-sections are the same as the standard model

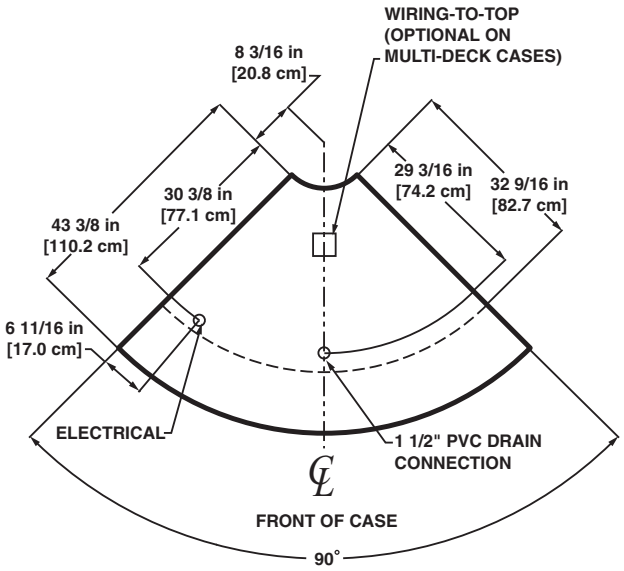

90° OUTSIDE
(11" BASEFRAME)

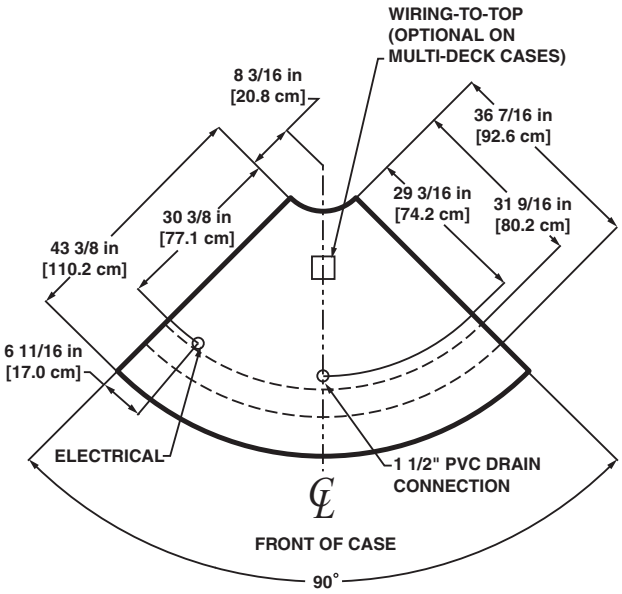

90° OUTSIDE
(5" BASEFRAME)

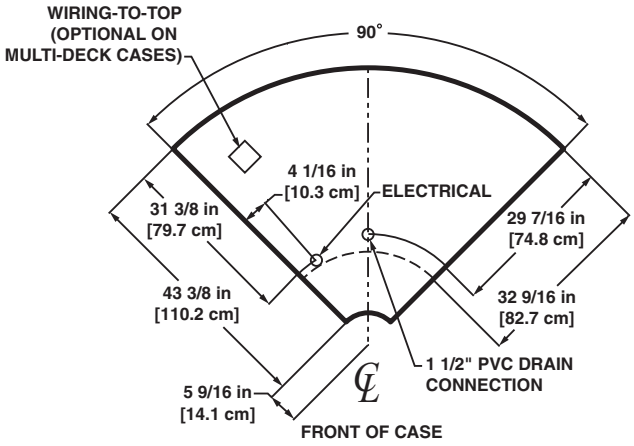

90° INSIDE
(11" BASEFRAME)

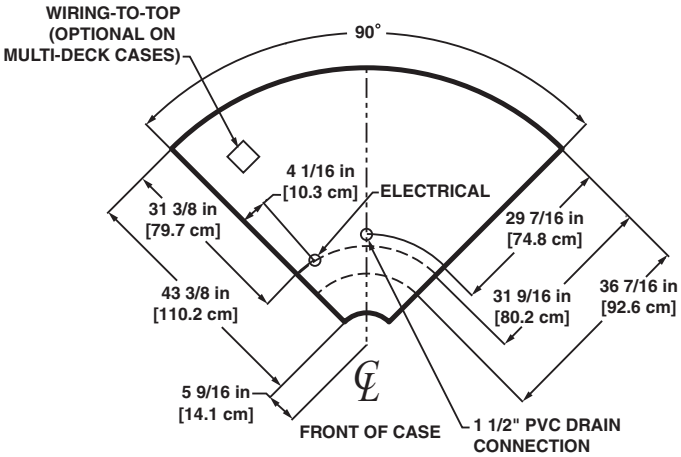

90° INSIDE
(5" BASEFRAME)

NOTE: Curved case cross-sections are the same as the standard model

INDEX

BB 110
Cub Cases 404-410
Curved Cases 443
MDCA 414
MMCA 416
MMRA 418
MPC 2
MPCA 420
O2.5UM 50
O2.5UMA (Mobile) 432
O2.5UMA (Non-Mobile) 54
O2.75MZD 60
O2.75UM 56
O2IM 298
O2SI 346
O2SIA 440
O2SIF 350
O2UM 40
O3.5EM 196
O3.5UD 82
O3.5UM 78
O3EM 188
O3EP 216
O3IM 302
O3IMB 302
O3IMBB 302
O3IP 306
O3IPB 306
O3UD 72
O3UM 66
O3UMA 434
O3UMA-56 436
O4ID 310
O4IDB 310
O4IDBB 310
O4UM 88
O5DM 124
O5DMA 126
O5DMH 128
O5DR 130
O5DRH 132
O5M 134
O5MR 136
O5UM 96
O5Z 138
O6UM 104
OB 384
OBA 386
OBD 388
OBIF 396
OBIFA 398
OBIFD 400
OBO 392
OBOA 394
OBOL 390
OC 4
OEM 180
OEP 208
OGM 332
OHM 144
OHMH 148
OHP 156
OHPH 158
OIM 264
OIMA 268
OIMB 264
OIMBA 270
OIMBB 264
OIP 276
OIPA 280
OIPB 276
OIPBB 276
OIZ 290
OLF 352
OLFG 354
OM 6
OMZ 10
OMZD 12
ON2.5UM 46
ON2UM 36
ON3.5EM 192
ON3.5UM 74
ON3EM 184
ON3EP 212
ON3IM 300
ON3UM 66
ON3W 402
ON4EM 200
ON4UM 84
ON5DM 118
ON5DMA 120
ON5DMH 122
ON5EM 204
ON5UM 92
ON6UM 100
ONEMZ 176
ONHM 140
ONHMH 142
ONHP 152
ONHPH 154
ONIM 256
ONIMA 260
ONIMB 256
ONIMBA 262
ONIP 272
ONIPB 272
ONIPBB 272
ONIZ 284
ONIZGG 288
ONMZ 8
ONN 164
ONN35U 112
ONN35UA 114
ONN5U 116
ONNA 166
ONP 14
ONRB 222
ONRBH 224
ONRIZ 240
ONRIZH 242
ONRZ 232
ONRZH 234
ONU 168
ONUA 170
ONUM 28
ONUMD 26
ONZ 282
OP 16
OPA 18
ORB 226
ORBH 230
ORBR 228
ORDR 172
ORIZ 244
ORIZH 246
ORZ 236
ORZH 238
OSA 316
OSAG 320
OSGF 324
OSI 342
OSIA 438
OSIF 348
OSIO 338
OSIOA 422
OSIOA-P 426
OSIOPA 424
OSIOZA 428
OSM 328
OSMLZ 336
OUM 32
OW2UM 44
OW3UM 70
OWEZ 294
OWHP 160
OWHPH 162
OWIZ 292
OWP 20
OWPA 22
OWSI 344
OWSIO 340
P2SGF 382
PDIF 356
PDNUM 360
PMFN2UM 368
PMFNUM 364
PMN2UM 366
PMNUM 362
PSG 370
PSGF 376
RBH 248
RIZH 252
RZH 250

804-526-4455

Hill PHOENIX
EXCELLENCE

A DOVER™ COMPANY

1925 Ruffin Mill Road, Colonial Heights, VA 23834

Due to our commitment to continuous improvement all specifications are subject to change without notice.
Hill PHOENIX is a Sustaining Member of the American Society of Quality.
Visit our web site at www.hillphoenix.com

ASH7060